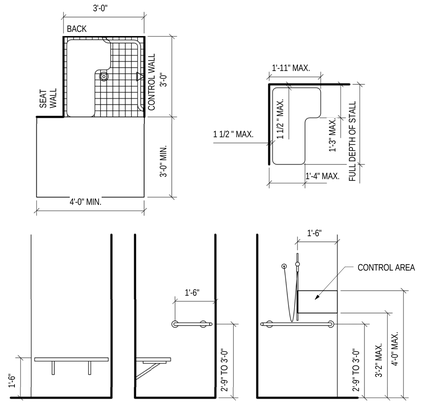

TRANSFER SHOWER
SCALE: 1/2" = 1'-0"

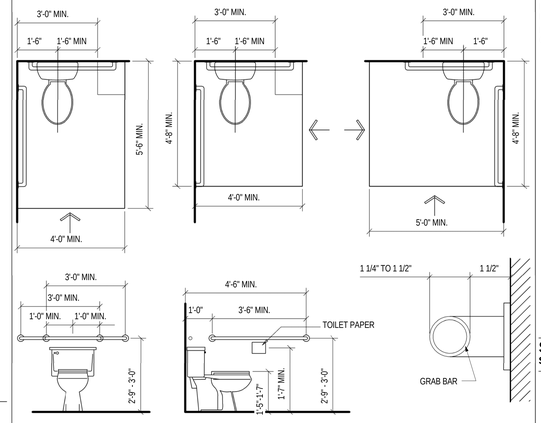

SINGLE USER TOILET
SCALE: 1/2" = 1'-0"

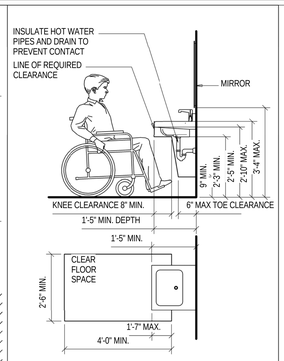

SINK OR VANITY
SCALE: 1/2" = 1'-0"

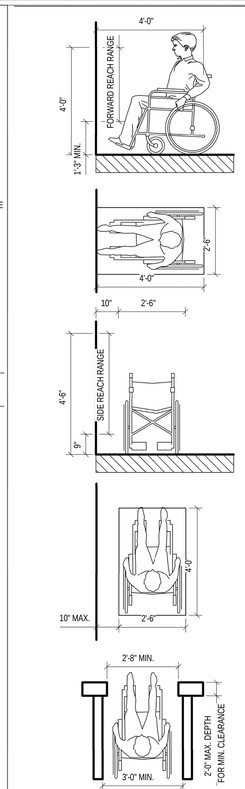

REACH RANGES
SCALE: 1/2" = 1'-0"

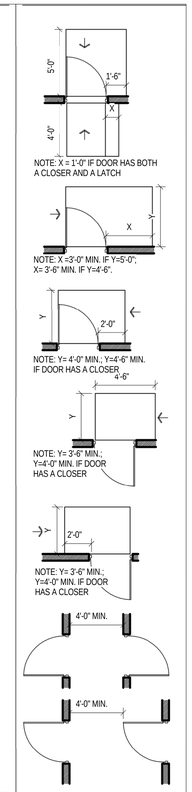

CLEARANCES
SCALE: 1/2" = 1'-0"

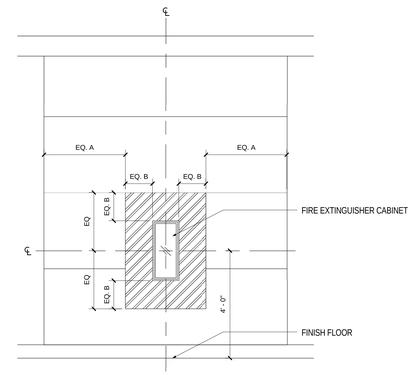

A. TYPICAL LOCATION FOR ONE FIRE EXTINGUISHER CABINET IN METAL PANEL.

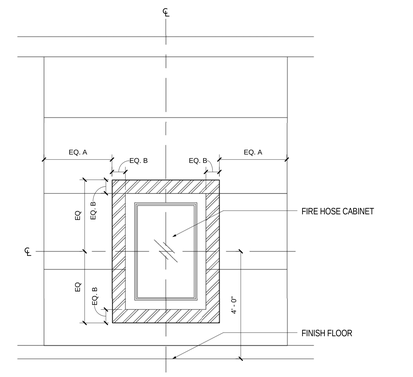

B. TYPICAL LOCATION FOR ONE FIRE HOSE CABINET IN METAL PANEL.

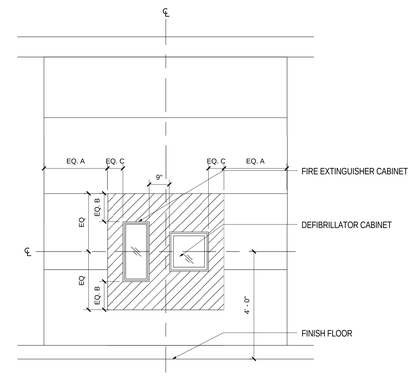

C. TYPICAL LOCATION FOR FIRE EXTINGUISHER AND DEFIBRILLATOR CABINET IN METAL PANEL.

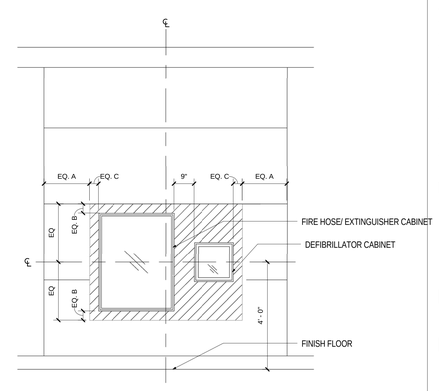

D. TYPICAL LOCATION FOR FIRE HOSE/EXTINGUISHER AND DEFIBRILLATOR CABINET IN METAL PANEL.

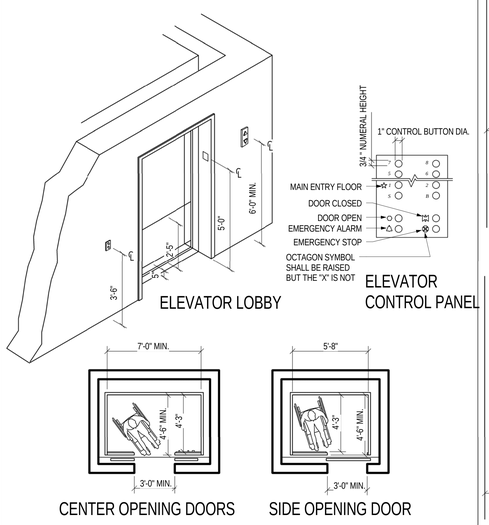

ELEVATOR
SCALE: VARIES

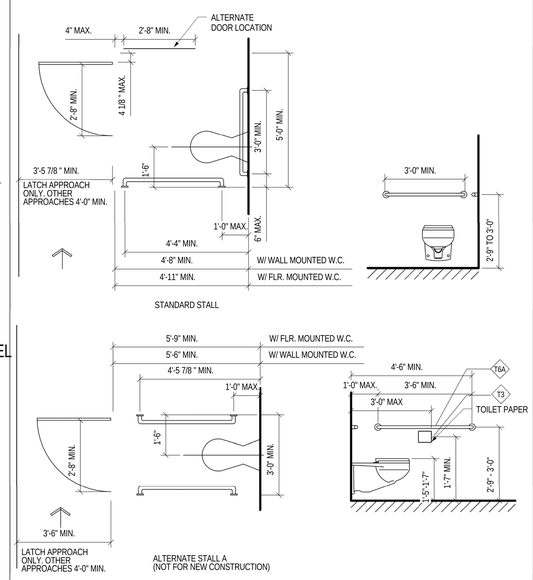

MULTI-USER TOILET
SCALE: 1/2" = 1'-0"

HANDRAIL EXTENSIONS
SCALE: 1/2" = 1'-0"

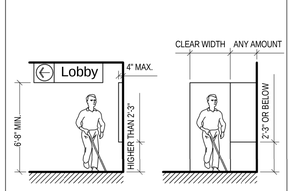

PROTRUDING OBJECTS
SCALE: 1/4" = 1'-0"

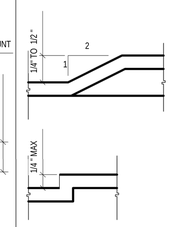

THRESHOLDS
SCALE: FULL

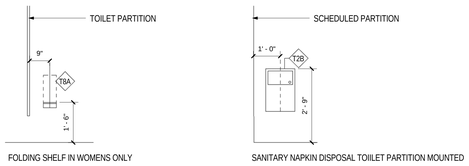

TYPICAL MOUNTING HEIGHTS FOR TOILET ACCESSORIES
SCALE: 1/2" = 1'-0"

NOTE: SEE TOILET ROOM ELEVATIONS FOR ALL OTHER TOILET ROOM ACCESSORIES MOUNTING HEIGHTS

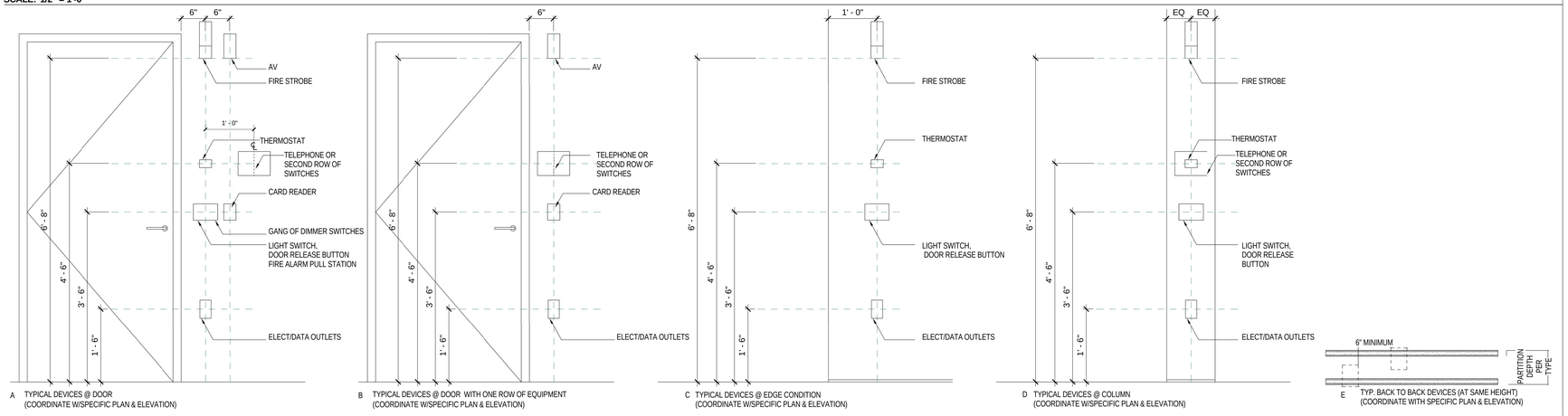

A TYPICAL DEVICES @ DOOR (COORDINATE W/SPECIFIC PLAN & ELEVATION)

B TYPICAL DEVICES @ DOOR WITH ONE ROW OF EQUIPMENT (COORDINATE W/SPECIFIC PLAN & ELEVATION)

C TYPICAL DEVICES @ EDGE CONDITION (COORDINATE W/SPECIFIC PLAN & ELEVATION)

D TYPICAL DEVICES @ COLUMN (COORDINATE W/SPECIFIC PLAN & ELEVATION)

E TYP. BACK TO BACK DEVICES (AT SAME HEIGHT) (COORDINATE WITH SPECIFIC PLAN & ELEVATION)

TYPICAL MOUNTING DIAGRAMS

NOTE: CONTRACTOR TO COORDINATE LOCATION OF STUDS IN PARTITION TO ACHIEVE INTENT. PROVIDE ADDITIONAL STUDS/BRACING AS NEEDED. PROVIDE SOUNDLINERS AT DEVICE BACK BOXES WHERE DEVICES ARE LOCATED IN PARTITIONS WITH INSULATION.

TYPICAL MOUNTING DIAGRAMS

Portland International Jetport

1001 Westbrook Street
Portland, Maine 04102

Gensler
2020 K Street, Northwest
Suite 200
Washington DC 20006
Telephone 202.721.5200
Facsimile 202.872.8587

	Date	Description
	07/11/08	SHEMATIC DESIGN
	09/22/08	DESIGN DEVELOPMENT
	12/03/08	75% CONSTRUCTION DOCUMENTS
	01/23/09	95% CONSTRUCTION DOCUMENTS
	10/26/09	ISSUED FOR PERMIT
145	09/01/11	ISSUED FOR CONSTRUCTION

Seal/Signature

Project Name
PWM Terminal Enhancement

Project Number
09.6395.000

Description
MOUNTING DIAGRAMS

Scale
As indicated

A00.13

© 2009 Gensler

M:\09.6395.000\BIM\Building Model_User Model Files\Clifford Takara_09.6395.000_PWM Jetport Expansion 00.rvt