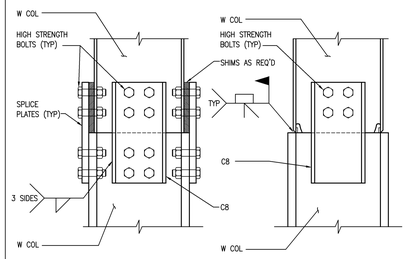

COLUMN SPLICE DETAILS 10
SCALE: 1-1/2" = 1'-0"

NOTES:
1) DESIGN STIFFENER & DOUBLER ℞'s TO RESIST FORCES CAUSED BY THE FULL CAPACITY OF THE BEAM.
2) DESIGN SHEAR ℞ FOR 1/2 THE ALLOWABLE UNIFORM LOAD OF THE BEAM.

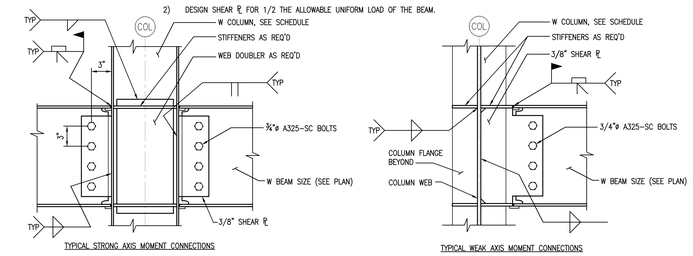

TYPICAL MOMENT CONNECTION DETAILS 6
SCALE: 1-1/2" = 1'-0"

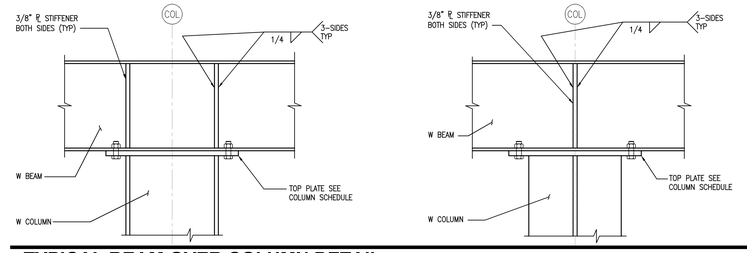

TYPICAL BEAM OVER COLUMN DETAIL 1
SCALE: 1-1/2" = 1'-0"

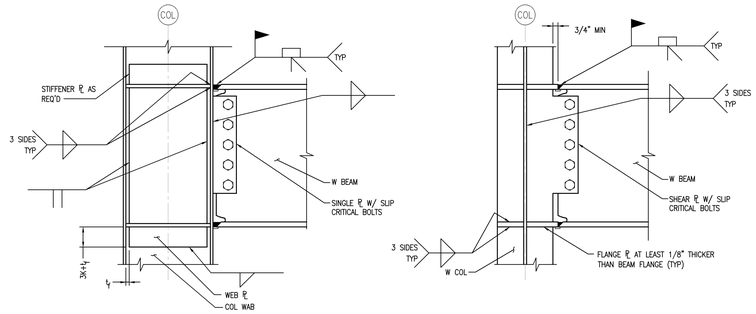

TYPICAL MOMENT CONNECTION DETAILS 7
SCALE: 1-1/2" = 1'-0"

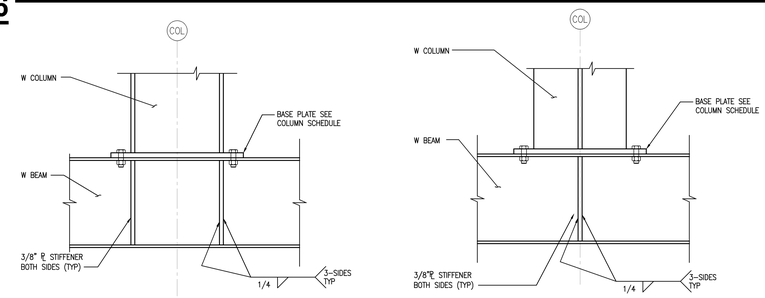

TYPICAL WF COLUMN ON BEAM DETAIL 2
SCALE: 1-1/2" = 1'-0"

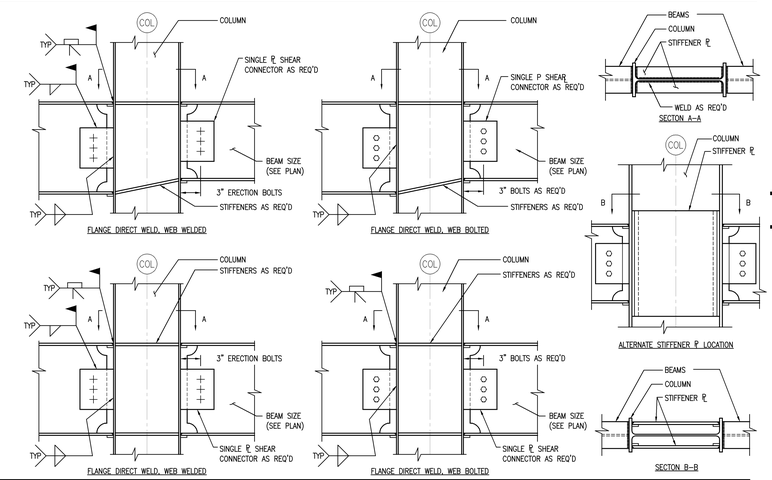

TYPICAL MOMENT CONNECTION DETAILS 8
SCALE: 1-1/2" = 1'-0"

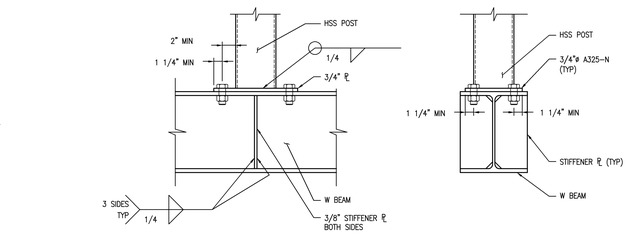

TYPICAL TUBE COLUMN ON BEAM DETAIL 3
SCALE: 1-1/2" = 1'-0"

CROSS BRACING DETAILS 9
SCALE: 1-1/2" = 1'-0"

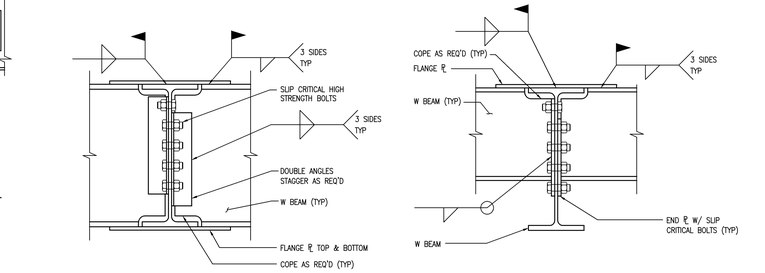

TYPICAL BEAM TO BEAM MOMENT CONNECTIONS DETAILS 4
SCALE: 1-1/2" = 1'-0"

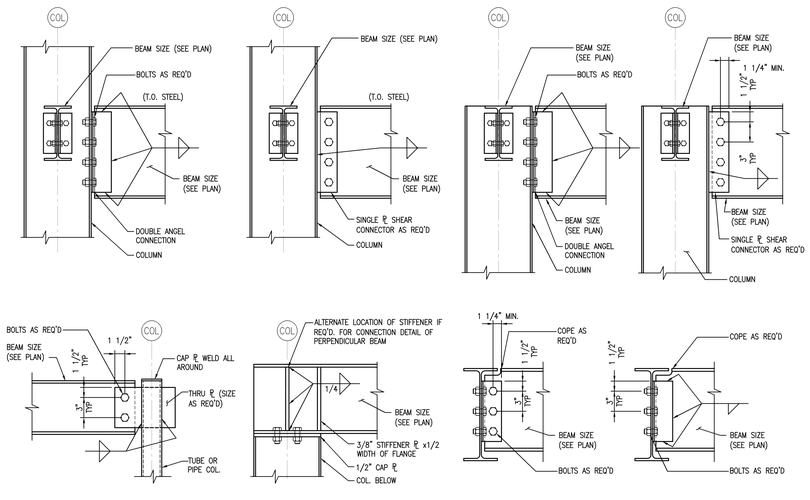

TYPICAL CONNECTOIN DETAILS 5
SCALE: 1-1/2" = 1'-0"

Portland International Jetport

1001 Westbrook Street
Portland, Maine 04102

Gensler
2020 K Street, NW
Suite 200
Washington, DC 20006
Telephone 202.721.5200
Facsimile 202.872.8587

DEST ASSOCIATES, INC.
343 Gorham Road, South Portland, ME 04106 P: (207) 741-1770 F: (207) 774-1244 www.dest.com
engineers · architects · surveyors · construction managers

△	Issue	Date & Issue Description	By	Check
--	01	12/03/08	JDE	--
		75% CONSTRUCTION DOCUMENTS		
--	02	01/23/09	JDE	--
		95% CONSTRUCTION DOCUMENTS		
--	03	10/26/09	JDE	--
		ISSUED FOR PERMIT		

Seal/Signature

STATE OF MAINE
JEFFREY D. EDWARDS
No. 13291
10/26/09
LICENSED
PROFESSIONAL ENGINEER

Project Name
PWM Terminal Enhancement

Project Number
09.6395.000

CAD File Name
T:\5330101\SHEETS\S12.03.DWG

Description
TYPICAL DETAILS – FRAMING

Scale
AS NOTED

S12.03

©2009 Gensler