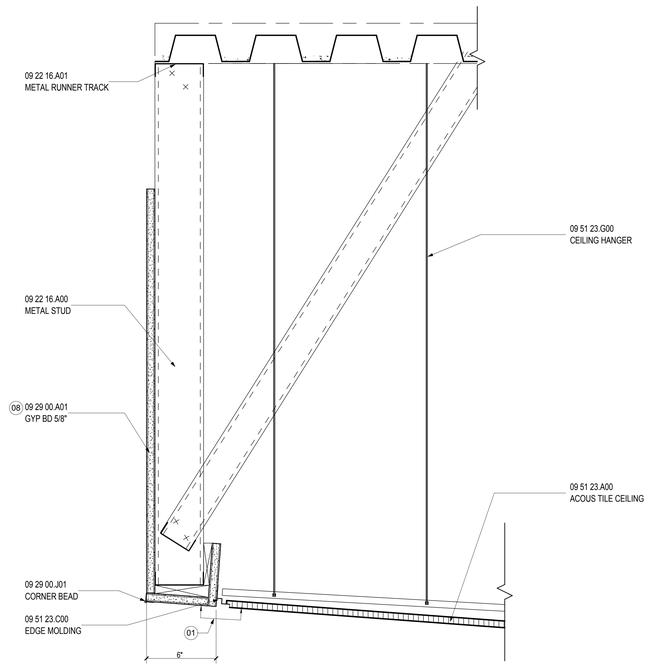


ACT TO GYP TRANSITION AT TICKET HALL 6
SCALE: 3" = 1'-0" A04.04.05

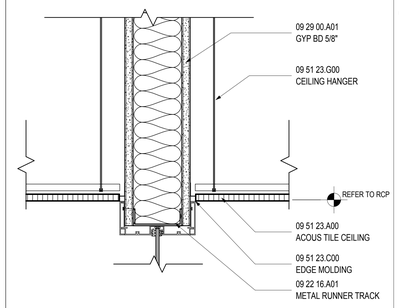


ACT CEILING @ SECURITY/TKTING 1
SCALE: 3" = 1'-0" A04.04.05

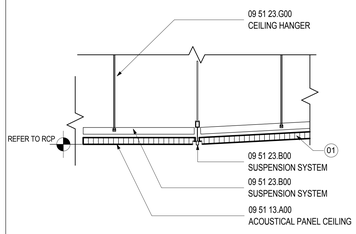


ACT TRANSITION 2
SCALE: 3" = 1'-0" A04.04.05

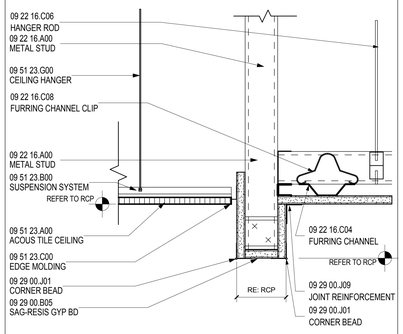


ACT/GYP HEADER 7
SCALE: 3" = 1'-0" A04.03.02

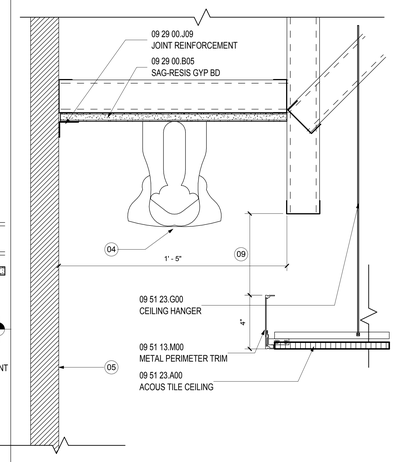


LIGHT COVE @ FEATURE WALL 3
SCALE: 3" = 1'-0" A04.04.05

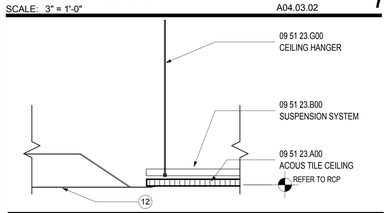


ACT 03/ DIFFUSER EDGE DETAIL 9
SCALE: 3" = 1'-0" A04.03.02

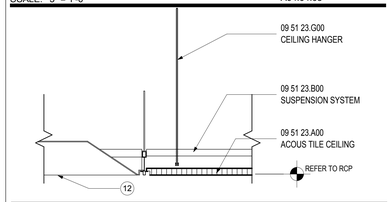


ACT 01/ DIFFUSER EDGE DETAIL 4
SCALE: 3" = 1'-0" A04.04.05

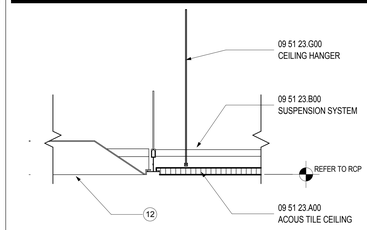


ACT 02/ DIFFUSER EDGE DETAIL 5
SCALE: 3" = 1'-0" A04.01.03

## SHEET NOTES

01 RE: REFLECTED CEILING PLANS FOR INCLINE ANGLE.
02 SCHEDULED LINEAR DIFFUSER. RE: MECHANICAL DRAWINGS FOR ADDITIONAL INFORMATION
03 SCHEDULED DUCTWORK. RE: MECHANICAL DRAWINGS
04 SCHEDULED LIGHT FIXTURE. RE: A04 SERIES FOR RCP AND PROJECT MANUAL FOR ADDITIONAL INFORMAITON
05 SCHEDULED PARTITION. RE: A02 SERIES FOR CONSTRUCTION PLAN AND PARTITION TYPES.
06 OVERLAP OF STAGGGERED CARRYING CHANNELS.
07 METAL ANGLE TO BE PAINTED P-01
08 GYP PAINTED P-01
09 OPENING FOR RETURN AIR
10 REFER TO DETAIL 17/A12.63 FOR TRANSITION TO PORTAL
11 LINE INDICATES EXTENT OF CONTROL JOINT AS INDICATED IN THE RCP AND ELEVATION
12 SCHEDULED DIFFUSER. RE: MECHANICAL DRAWINGS FOR ADDITIONAL INFORMATION

## GENERAL NOTES

Portland International Jetport

1001 Westbrook Street
Portland, Maine 04102

Gensler
2020 K Street, Northwest
Suite 200
*Washington* DC 20006
Telephone 202.721.5200
Facsimile 202.872.8587

| Issue | Date & Issue Description | By | Check |
|---|---|---|---|
| 01 | 10/26/09 | | |
| | ISSUED FOR PERMIT | | |

Seal/Signature

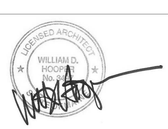


Project Name
PWM Terminal Enhancement

Project Number
09.6395.000

Description
TYPICAL CEILING DETAILS

Scale
3" = 1'-0"

**A12.81**

© 2009 Gensler