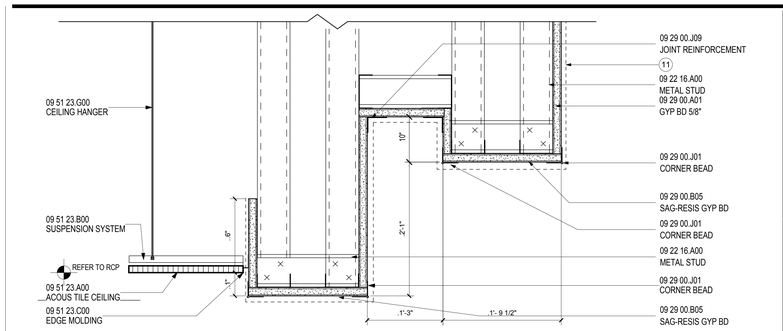

GYP HEADER @ CONCESSION 16

SCALE: 3" = 1'-0" A04.03.02

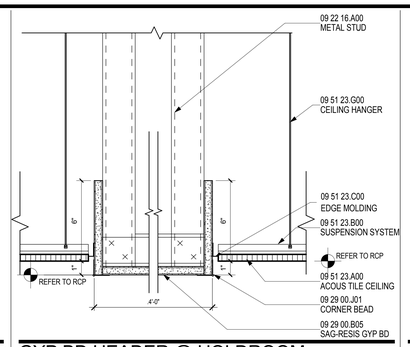

GYP BD HEADER @ HOLDROOM 11

SCALE: 3" = 1'-0" A04.03.02

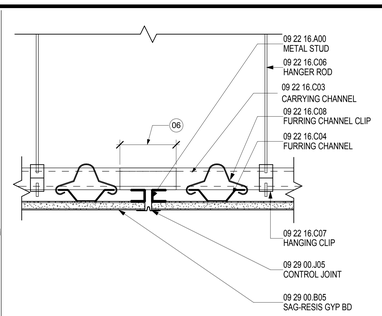

CONTROL JOINT AT GYP BOARD 6

SCALE: 3" = 1'-0" A04.03.02

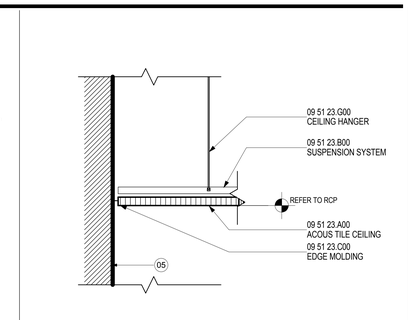

SHADOW MOLDING DETAIL 1

SCALE: 3" = 1'-0" A04.01.03

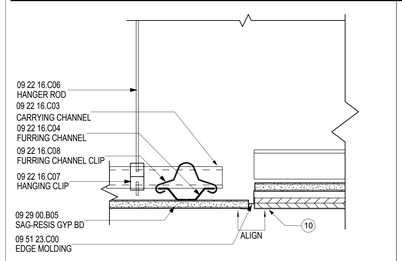

PORTAL @ FOOD COURT 19

SCALE: 3" = 1'-0" A04.03.02

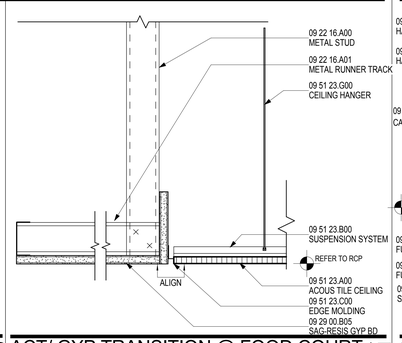

ACT/ GYP TRANSITION @ FOOD COURT 17

SCALE: 3" = 1'-0" A04.03.02

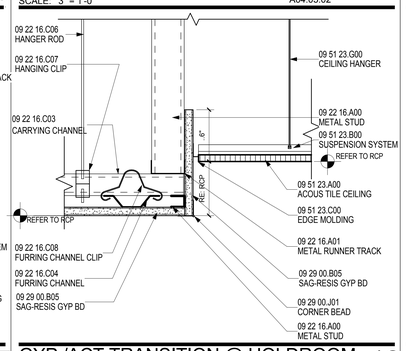

GYP /ACT TRANSITION @ HOLDROOM 12

SCALE: 3" = 1'-0" A04.03.02

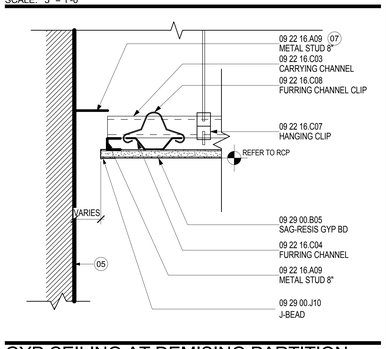

GYP CEILING AT DEMISING PARTITION 7

SCALE: 3" = 1'-0" A04.03.02

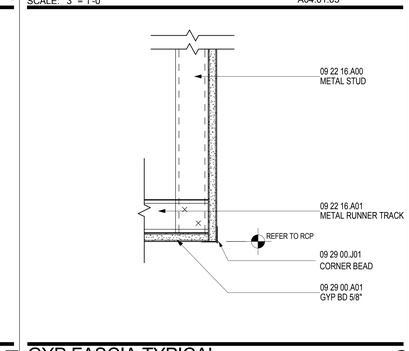

GYP FASCIA TYPICAL 2

SCALE: 3" = 1'-0" A04.02.03

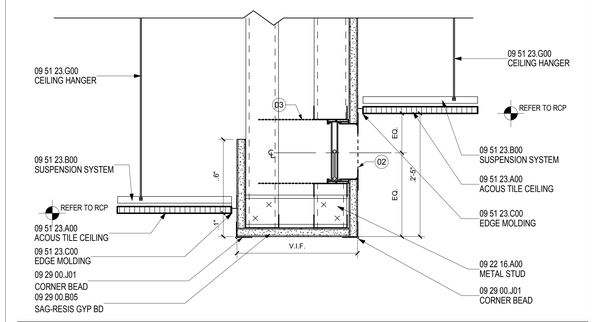

GYP HEADER @ CONCESSION/ HOLDROOM 20

SCALE: 3" = 1'-0" A04.03.02

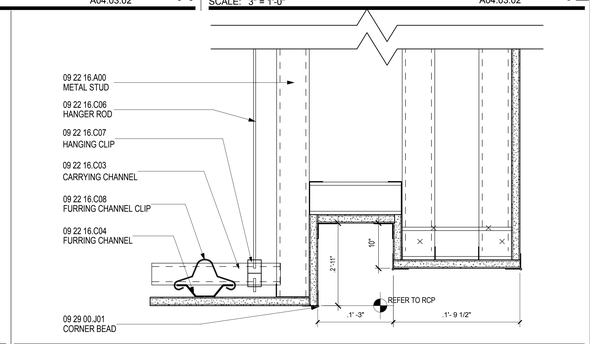

GYP HEADER @ CONCOURSE 13

SCALE: 3" = 1'-0" A04.03.02

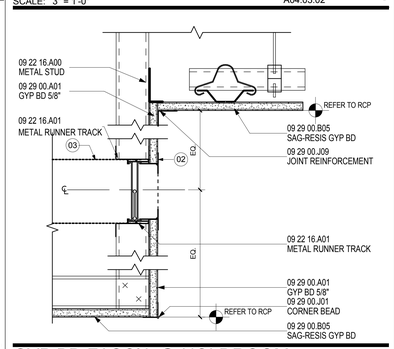

GYP BD FASCIA @ HOLDROOM 8

SCALE: 3" = 1'-0" A04.03.02

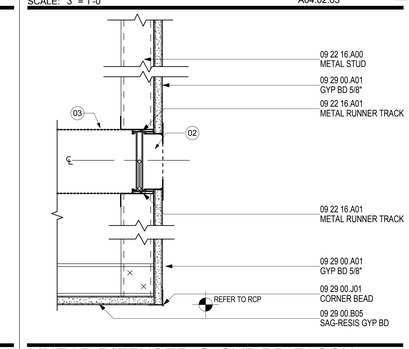

LINEAR DIFFUSER @ GYP BD FASCIA 3

SCALE: 3" = 1'-0" A04.02.03

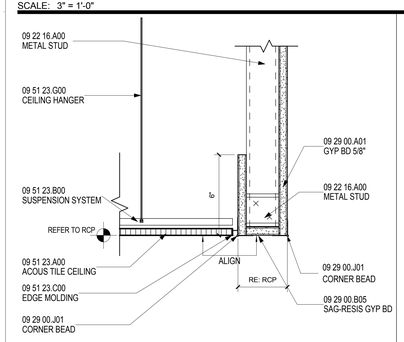

ACT/GYP TRANSITION 21

SCALE: 3" = 1'-0" A04.02.03

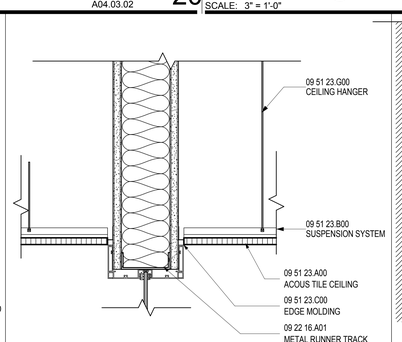

ACT CLNG @ FIXED LINK 18

SCALE: 3" = 1'-0" A04.03.02

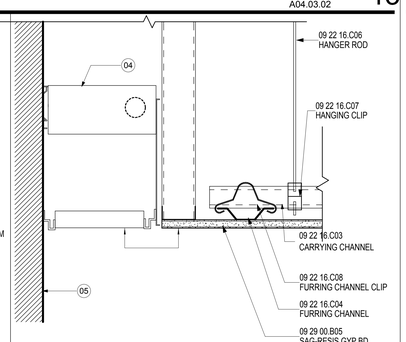

LIGHT SLOT AT RESTROOM 14

SCALE: 3" = 1'-0" A08.00

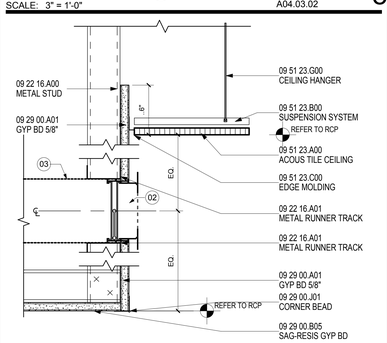

LINEAR DIFFUSER @ HOLDROOM CLNG 9

SCALE: 3" = 1'-0" A04.03.02

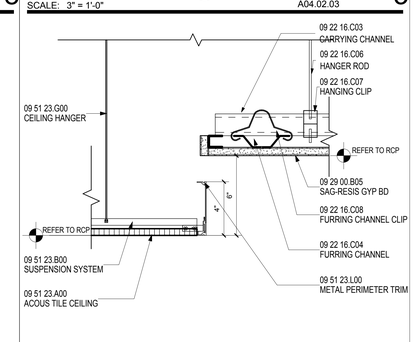

ACT/GYP. CLNG TRANSITION @ TKTING 4

SCALE: 3" = 1'-0" A04.02.03

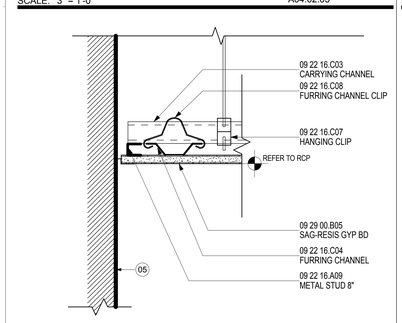

GYP CEILING AT WALL 22

SCALE: 3" = 1'-0" A04.01.03

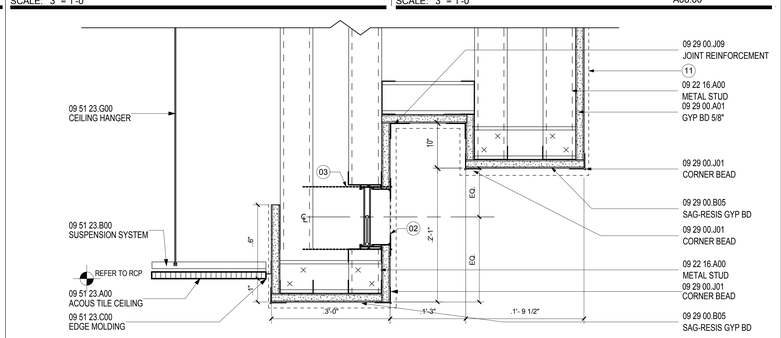

GYP HEADER @ CONCOURSE/ CONCESSION 15

SCALE: 3" = 1'-0" A04.03.02

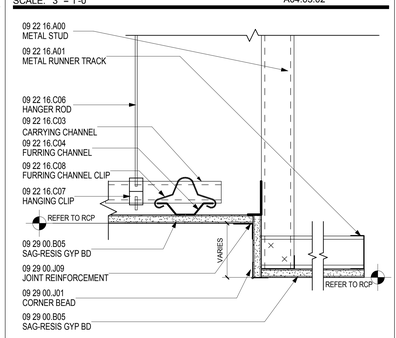

GYP SOFFIT FASCIA 10

SCALE: 3" = 1'-0" A04.03.02

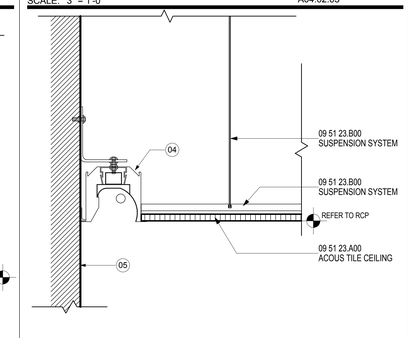

LIGHT SLOT @ TKTING DETAIL 5

SCALE: 3" = 1'-0" A04.02.03

SHEET NOTES

01 RE: REFLECTED CEILING PLANS FOR INCLINE ANGLE.
02 SCHEDULED LINEAR DIFFUSER. RE: MECHANICAL DRAWINGS FOR ADDITIONAL INFORMATION
03 SCHEDULED DUCTWORK. RE: MECHANICAL DRAWINGS
04 SCHEDULED LIGHT FIXTURE. RE: A04 SERIES FOR RCP AND PROJECT MANUAL FOR ADDITIONAL INFORMATION
05 SCHEDULED PARTITION. RE: A02 SERIES FOR CONSTRUCTION PLAN AND PARTITION TYPES.
06 OVERLAP OF STAGGGERED CARRYING CHANNELS.
07 METAL ANGLE TO BE PAINTED P-01
08 GYP PAINTED P-01
09 OPENING FOR RETURN AIR
10 REFER TO DETAIL 17/A12.63 FOR TRANSITION TO PORTAL
11 LINE INDICATES EXTENT OF CONTROL JOINT AS INDICATED IN THE RCP AND ELEVATION
12 SCHEDULED DIFFUSER. RE: MECHANICAL DRAWINGS FOR ADDITIONAL INFORMATION

GENERAL NOTES

Portland International Jetport

1001 Westbrook Street
Portland, Maine 04102

Gensler
2020 K Street, Northwest
Suite 200
Washington DC 20006
Telephone 202.721.5200
Facsimile 202.872.8587

Issue	Date & Issue Description	By	Check
01	01/23/09		
	95% CONSTRUCTION DOCUMENTS		
02	10/26/09		
	ISSUED FOR PERMIT		

Seal/Signature

LICENSED ARCHITECT WILLIAM D. HOGE III NO. 7

Project Name
PWM Terminal Enhancement

Project Number
09.6395.000

Description
TYPICAL CEILING DETAILS

Scale
3" = 1'-0"

A12.80

© 2009 Gensler