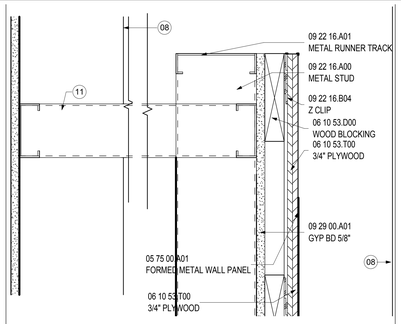

SILL DETAIL AT METAL WALL PANEL 12
SCALE: 3" = 1'-0" A12.64

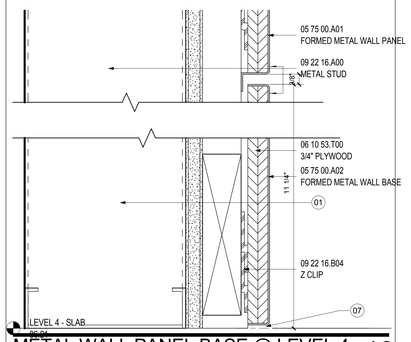

METAL WALL PANEL BASE @ LEVEL 4 13
SCALE: 6" = 1'-0" A11.20

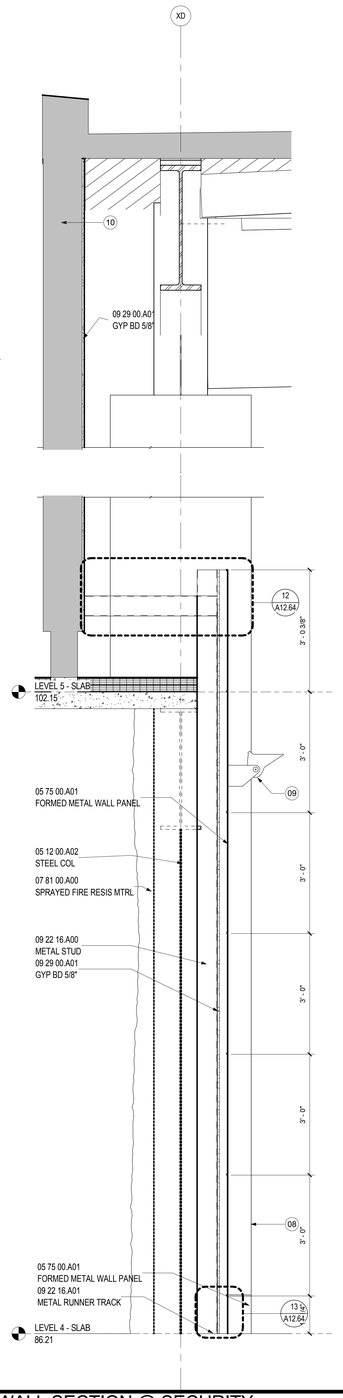

WALL SECTION @ SECURITY 10
SCALE: 3/4" = 1'-0" A10.01

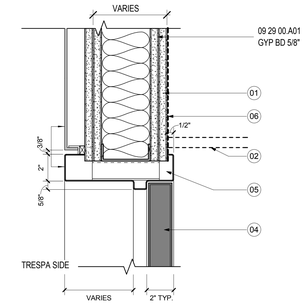

HEAD- DOOR TYPE A- METAL PANEL 6
SCALE: 3" = 1'-0"

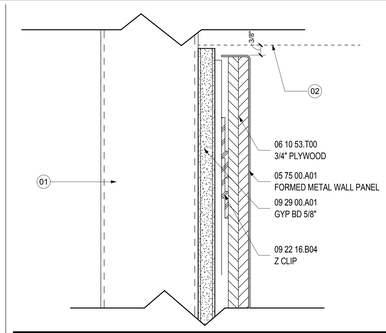

METAL WALL PANEL HEAD 1
SCALE: 6" = 1'-0" A11.12

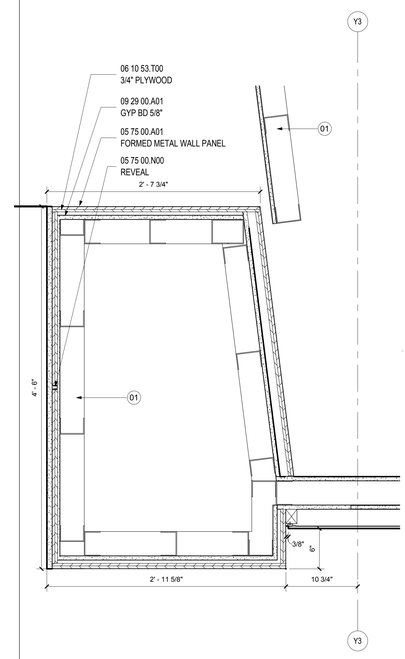

CONCESSIONS OPENING 7
SCALE: 1 1/2" = 1'-0" A02.03.05

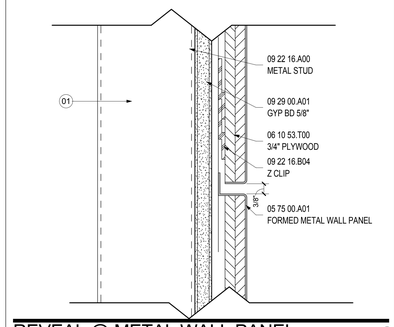

REVEAL @ METAL WALL PANEL 2
SCALE: 6" = 1'-0"

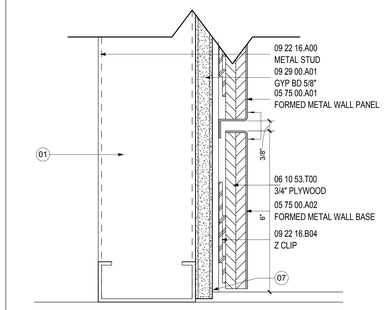

METAL WALL PANEL BASE 3
SCALE: 6" = 1'-0" A11.10

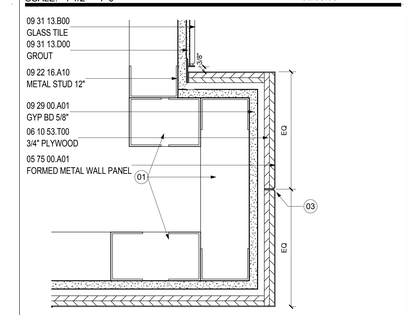

METAL/CERAMIC TILE TRANSITION 8
SCALE: 3" = 1'-0" A08.01

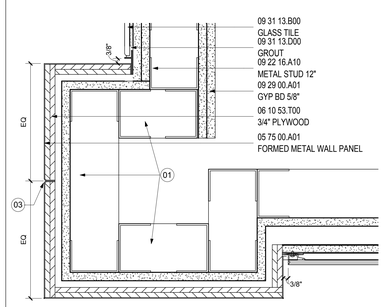

METAL TRANSITION @ RESTROOM 4
SCALE: 3" = 1'-0" A08.01

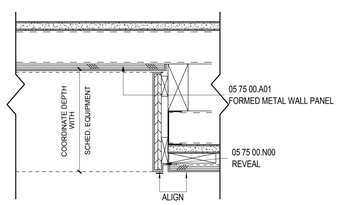

METAL EDGE PLAN DETAIL AT FIDS 11
SCALE: 3" = 1'-0" A12.64

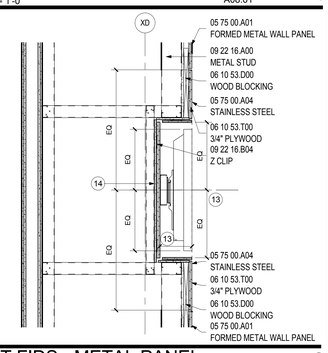

SEC AT FIDS - METAL PANEL 9
SCALE: 3/4" = 1'-0" A12.64

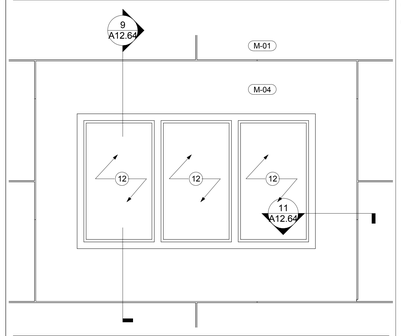

FIDS AT METAL WALL PANEL 5
SCALE: 3/4" = 1'-0" A11.20

SHEET NOTES

01 SCHEDULED PARTITION. RE: A02 SERIES FOR CONSTRUCTION PLAN AND PARTITION TYPES.
02 SCHEDULED CEILING. RE: A04 SERIES FOR REFLECTED CEILING PLANS
03 HAIRLINE JOINT
04 SCHEDULED DOOR. RE: A00.30 FOR DOOR SCHEDULE
05 STAINLESS STEEL DOOR. RE: A00.30 FOR DOOR SCHEDULE
06 REFER TO FINISH PLAN FOR FINISH ON THIS SIDE
07 PROVIDE BLACK FILLER TO CONCEAL GYP.
08 COLUMN LINE BEYOND
09 FIXTURE FB REFER TO REFLECTED CEILING PLAN, ELEVATION AND LIGHTING SPECIFICATIONS FOR ADDITIONAL INFORMATION AND MOUNTING DIAGRAMS
10 REFER TO A09 SERIES FOR EXTERIOR WALL INFORMATION
11 RETURN AIR PLENUM. RE: MECHANICAL DRAWINGS FOR ADDITIONAL INFORMATION
12 FLIGHT INFORMATION DISPLAY SYSTEM. RE: TO POWER AND COMMUNICATION PLANS AND SCHEDULE FOR EQUIPMENT SPECIFICATIONS. COORDINATE WITH ELECTRICAL AND COMM DRAWINGS. NO VISIBLE CORDS OR WIRING.
13 COORDINATE DEPTH WITH SELECTED SCREEN AND MOUNTING BRACKET
14 COORDINATE MOUNTING AND METAL PLATE BLOCKING AS REQUIRED.

GENERAL NOTES

Portland International Jetport

1001 Westbrook Street
Portland, Maine 04102

Gensler
2020 K Street, Northwest
Suite 200
Washington DC 20006
Telephone 202.721.5200
Facsimile 202.872.8587

Issue	Date & Issue Description	By	Check
01	01/23/09		
	95% CONSTRUCTION DOCUMENTS		
02	10/26/09		
	ISSUED FOR PERMIT		

Seal/Signature

Project Name
PWM Terminal Enhancement

Project Number
09.6395.000

Description
INTERIOR DETAILS

Scale
As indicated

A12.64

© 2009 Gensler