PLANS FOR

PORTLAND INTERNATIONAL JETPORT

PORTLAND, MAINE

• AIRFIELD LIGHTING VAULT AND CONCRETE ENCASED DUCT

AIP-3-23-0038-43

JULY 2003

03 1235
199 A001
11' x 17'

FEDERAL AVIATION ADMINISTRATION

APPROVED _____
CHIEF AIRPORTS ENGINEERING AND SAFETY BRANCH

DATE _____

MAINE DEPARTMENT OF TRANSPORTATION

APPROVED _____
CHIEF ENGINEER

DATE _____

CITY OF PORTLAND

APPROVED _____
AIRPORT MANAGER

DATE _____

APPROVALS

VICINITY MAP

Item	Description	Bid Qty.	Unit	Actual Qty.
P-151-4.1	Clearing and Grubbing	0.2	AC	
P-152-4.1	Test Pit Excavation	150	CY	
P-152-4.2	Select Backfill	250	CY	
P-156-5.1	Hay Bales	4	EA	
P-156-5.2	Silt Fence	500	LF	
P-156-5.4	Stone Check Dam	3	EA	
P-156-5.5	Stabilized Construction Entrance	1	EA	
P-209-5.1	Crushed Aggregate Base Course	320	CY	
P-401-8.1	Bituminous Course	360	TON	
P-607-4.1	Pavement Milling	65	SY	
P-607-4.2	Saw Cut Joint	3,550	LF	
P-620-5.2	Roadway Painting	12,500	LF	
P-625-5.1	Coal Tar Pitch Emulsion	3,000	SY	
D-701-5.1	4" Diameter Sanitary Sewer	76	LF	
D-701-5.2	6" Diameter Storm Drain	60	LF	
D-701-5.3	6" Underdrain	170	LF	
D-701-5.4	8" Diameter Storm Drain	120	LF	
D-701-5.5	12" Diameter Storm Drain	85	LF	
D-701-5.6	18" Diameter Storm Drain	55	LF	
D-701-5.7	2" Diameter Force Main	40	LF	
D-701-5.8	Rigid Foam Insulation	20	LF	
D-701-5.9	4" Clean Out	1	EA	
D-751-5.1	4' Diameter Catch Basin	2	EA	
D-751-5.2	Electrical/Telephone Handhole	4	EA	
D-751-5.3	CMP Manhole	11	EA	
D-751-5.4	Telephone Manhole	11	EA	
D-751-5.5	Coring	1	EA	
D-751-5.6	Type A Manhole	2	EA	
D-751-5.7	Type E Manhole	1	EA	
D-752-5.1	Rip Rap (D50 = 6")	70	SY	
D-752-5.2	Rip Rap (D50 = 12")	35	SY	
T-901-5.1	Seeding	20	UNIT	
T-905-5.1	Topsoiling	130	CY	
T-908-5.1	Mulching	2,300	SY	
F-162-5.1	New Chain Link Fence (8' High Security)	320	LF	
F-162-5.2	Temporary Construction Fence	1	LS	
F-162-5.3	14' Gate	1	EA	
F-162-5.4	28' Gate	1	EA	
108-5.1	Subbase Course (MDOT)	2,100	CY	
208-5.1	Crushed Aggregate Base (MDOT)	120	CY	
308-5.1	Hot Mix Asphalt (9.5 mm 50 gyr.)	1,180	TON	
308-5.2	Hot Mix Asphalt (19 mm - 50 gyr.)	880	TON	
400-5.1	Bituminous Tack Coat	20	GAL	
500-3.1	Mobilization and Demobilization	1	LS	
600-5.1	Pump Station	1	EA	
600-5.2	750-Gallon Septic Tank	1	EA	
600-5.3	Distribution Box	1	EA	
600-5.4	Disposal Field	1	LS	
700-5.1	2" Water	105	LF	
700-5.2	Relocate Hydrant	1	EA	
700-5.3	2" Tap	1	EA	
800-4.1	Traffic Control, Safety and Security Measures	1	LS	
900-4.1	Energy Management System	1	EST	
900-4.2	Telephone System	1	EST	
900-4.3	Security System	1	EST	
1000-5.1	Storm Drain Cleaning	1	LS	
1100-3.1	Airfield Lighting Vault	1	LS	
L-108.1	No. 6 Bare Counter Paint	1,100	LF	
L-110-5.1	2" Conduit	520	LF	
L-110-5.2	2-Way Concrete Encased Duct	40	LF	
L-110-5.3	4" Conduit	460	LF	
L-110-5.4	4-Way Concrete Encased Duct	1,400	LF	
L-110-5.5	6-Way Concrete Encased Duct	45	LF	
L-110-5.6	8-Way Concrete Encased Duct	3,850	LF	
L-110-5.7	14-Way Concrete Encased Duct	30	LF	
L-110-5.8	20-Way Concrete Encased Duct	80	LF	
L-110-5.9	MHA-1 to Building Concrete Encased Duct	1	LS	
L-110-5.10	MHC-1 to Building Concrete Encased Duct	1	LS	
L-110-5.11	Schedule 80 Split Duct	20	LF	
L-110-5.12	Building Electrical Service	70	LF	
L-110-5.13	Building Telephone Service	250	LF	

QUANTITIES

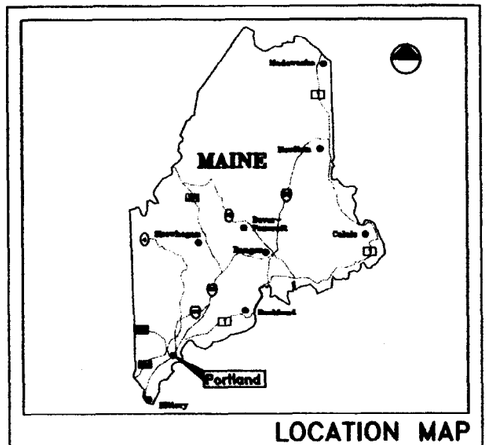

LOCATION MAP

1	COVER SHEET
2	SITE PLAN
C-1	GRADING, DRAINAGE AND LAYOUT PLAN
C-2	UTILITY PLAN
C-3	CONCRETE ENCASED DUCT, YELLOWBIRD ROAD
C-4	CONCRETE ENCASED DUCT, YELLOWBIRD ROAD
C-5	CONCRETE ENCASED DUCT, YELLOWBIRD ROAD
C-6	PLAN VIEW - 20 WAY DUCT
C-7	PUMP STATION DETAIL AND PROFILE
C-8	CONCRETE MANHOLE AND DUCT DETAILS - AIRSIDE
C-9	EROSION CONTROL DETAILS AND TRENCH DETAILS
C-10	UTILITY DETAILS / YELLOWBIRD ROAD. TRENCH REPLACEMENT
C-11	SITE DETAILS
C-12	RIPRAP REPAIR PLAN AND PROFILE YELLOWBIRD ROAD
A1-1 TO 3	ARCHITECTURAL
A2-1 TO 4	ARCHITECTURAL
A3-1	ARCHITECTURAL
S1-1,2	STRUCTURAL
S2-1,2	STRUCTURAL
P1-1, P2-1, P3-1	PLUMBING
E1-3, E2-1, E3-1	ELECTRICAL
E4-1, E5-1 TO 3	ELECTRICAL
H-1 TO 3	MECHANICAL

INDEX OF SHEETS

STATE OF MAINE
MICHAEL J. DELUCA
#9448
REGISTERED PROFESSIONAL ENGINEER
07/27/03

DeLUCA - HOFFMAN ASSOC. INC. CERTIFIES THAT THE PLANS AND SPECIFICATIONS FOR THE PROJECT WERE PREPARED IN ACCORDANCE WITH CRITERIA CONTAINED IN THE CURRENT EDITION OF F.A.A. ADVISORY CIRCULARS.

Michael J. DeLuca, P.E.
Sr. Vice President

HNTB
ARCHITECTS ENGINEERS PLANNERS

DH

DeLuca-Hoffman Associates, Inc.
Consulting Engineers
778 Main Street
South Portland, Maine 04106
207-775-1121

REV	DATE	DESCRIPTION
1	7/27/03	ISSUED FOR BID

2:\19\Rebac\CDV.dwg, CDV, 07/24/2003 09:25:36 AM, cwilkerson

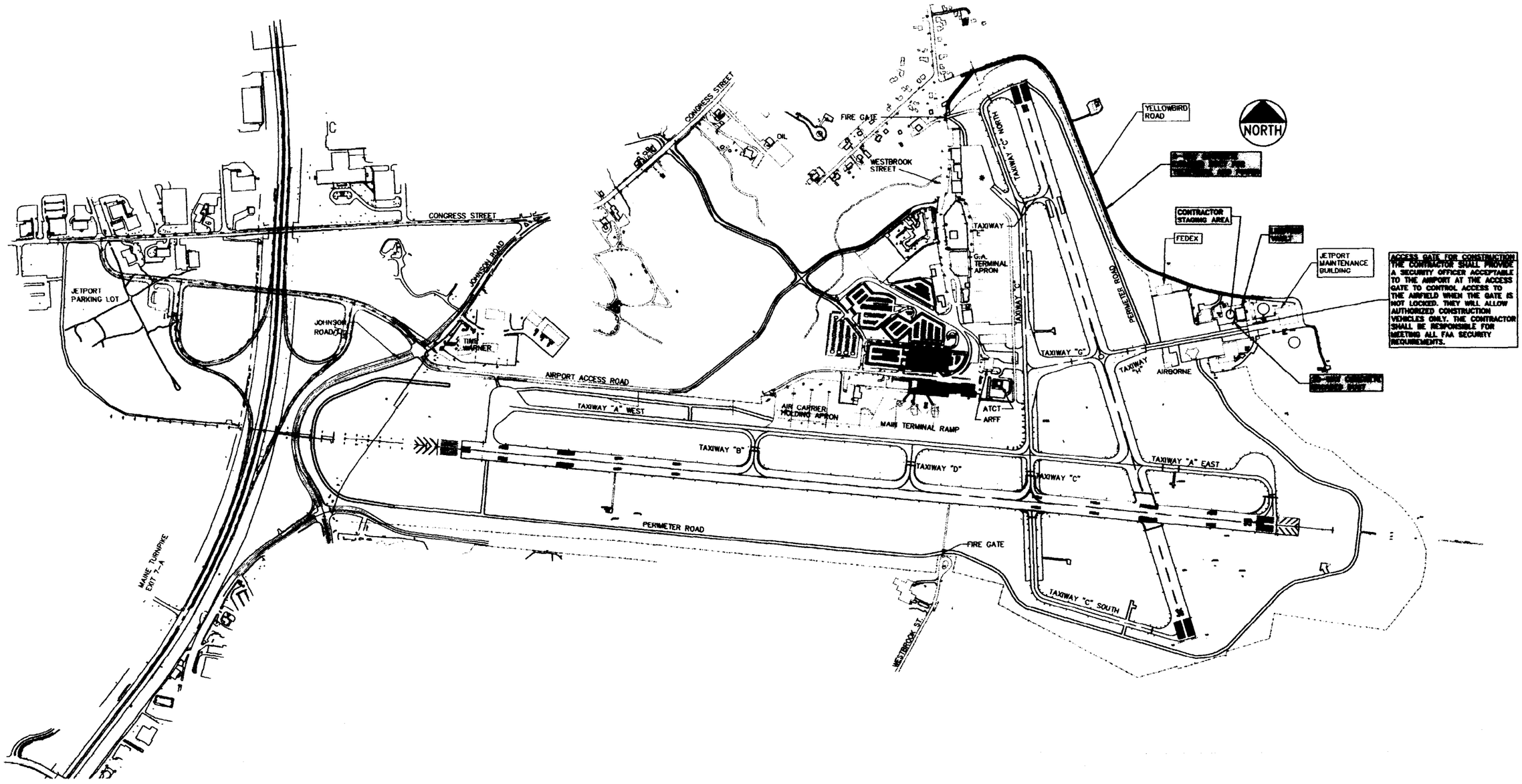

WORK FOR YELLOWBIRD ROAD

1. CONTRACTOR WILL MAINTAIN ONE-WAY TRAFFIC AT ALL TIMES ON YELLOWBIRD ROAD. FLAGGERS WILL BE REQUIRED.

2. EXISTING TELEPHONE AND POWER TO REMAIN IN SERVICE.

AIRFIELD WORK FOR LIGHTING VAULT

1. CONTRACTOR WILL INSTALL TEMPORARY SECURITY FENCE FOR CONSTRUCTION. FENCE WILL BE REMOVED AND PERMANENT FENCING INSTALLED PRIOR TO COMPLETION.

HNTB
ARCHITECTS ENGINEERS PLANNERS

REV	DATE	DESCRIPTION
1	7/27/03	ISSUED FOR BID

REVISIONS

STATE OF MAINE — MICHAEL J. DELUCA 03446

P.E. MICHAEL J. DELUCA
LIC. #3446

PROJECT: AIRFIELD LIGHTING VAULT AND CONCRETE ENCASED DUCT
AIP-3-23-0038-43

SHEET TITLE: SITE PLAN

CLIENT: PORTLAND INTERNATIONAL JETPORT
PORTLAND, MAINE

[redacted]
DeLUCA-HOFFMAN ASSOCIATES, INC.
770 MAIN STREET, SUITE 6
SOUTH PORTLAND, ME 04106
(207) 772-7161
DHA@DELUCAHOFFMAN.COM

DRAWN:	MWE	DATE:	NOV 2002
DESIGNED:	MJD	SCALE:	1"=600'±
CHECKED:	MJD	JOB NO.	1916.01
FILE NAME:	G:\1916\1916-1-4008C.DWG		
SHEET	2		

G:\1916\1916-1-4008C.DWG, layout, 07/24/2003 09:32:53 AM, cwintermute

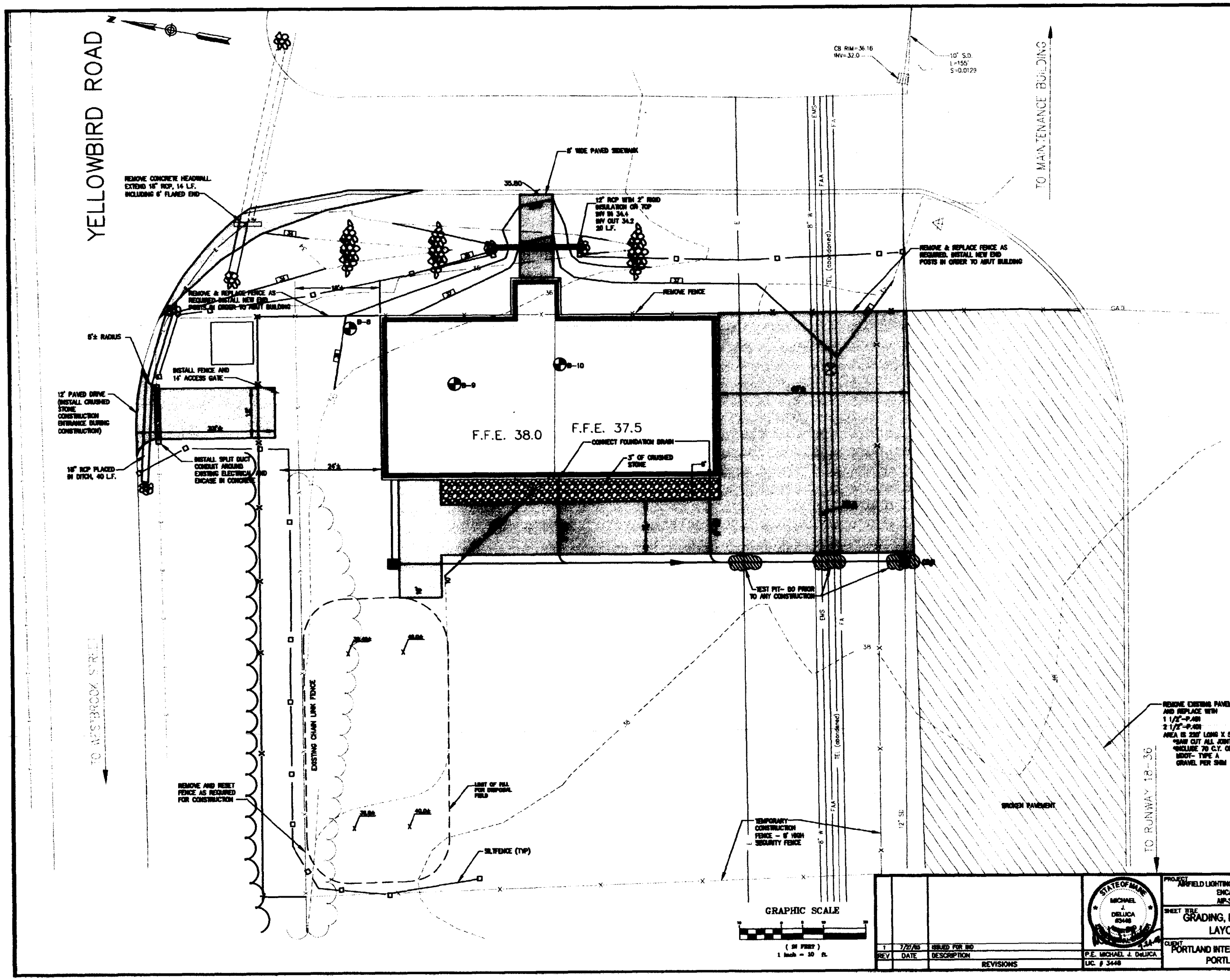

LEGEND

CHECKS	DESCRIPTION	PROPOSED
	BUILDING	
	SPOT ELEVATION	
100	EXISTING CONTOUR LINE	
	UTILITY POLE	
	TELEPHONE	
	ELECTRICS	
	WATER LINE	
	FORCE MAIN	
	FAA CABLE	
	SWALE DRAIN	
	ROOF DRAIN	
	FLOOR DRAIN	
	CLEANOUT	
	WATER GATE VALVE	
	WATER SHUT OFF VALVE	
	CATCH BASIN	
	BURNED OR FRUSE	
	BITUMINOUS PAVEMENT	
	FENCE	
	MANHOLE	
EMS	ENERGY MANAGEMENT SYSTEM	
	ENERGY MAINTENANCE SECTION	
	TEMP	
	CLEANOUT	
	MAT EDGE BIT. PAVEMENT	
	SILT FENCE	
	STONE CHECK DAM	
	TREE LINE	
	BARRIERS	
	SPOT ELEVATION	
	PULL BOX	
	CONVERTED STONE	

STRUCTURE SCHEDULE

NAME	RIM ELEV.	INV IN	INV OUT
C.B. #1	37.8	33.53	33.43
C.B. #2	38.9	34.14	34.04

NOTES
1. CONTRACTOR TO OBTAIN CONSTRUCTION ACCESS BY INSTALLING TEMPORARY CULVERT IN DITCH AND INSTALLING GRAVEL ROAD. INCLUDE CRUSHED STONE CONSTRUCTION ENTRANCE. REMOVE AND RESTORE AREA AS PART OF CLEAN UP OPERATION.

2. LOAM AND SEED ALL DISTURBED AREAS.

3. CONTRACTOR TO MAINTAIN SECURITY AT ALL TIMES.

REV	DATE	DESCRIPTION
1	7/27/03	ISSUED FOR BID

REVISIONS

STATE OF MAINE
MICHAEL J. DELUCA
#3448
P.E. MICHAEL J. DeLUCA
LIC. # 3448

PROJECT
AIRFIELD LIGHTING VAULT AND CONCRETE ENCASED DUCT
AIP-3-23-0035-43

SHEET TITLE
GRADING, DRAINAGE AND LAYOUT PLAN

CLIENT
PORTLAND INTERNATIONAL JETPORT
PORTLAND, MAINE

DeLUCA-HOFFMAN ASSOCIATES, INC.
778 MAIN STREET, SUITE 8
SOUTH PORTLAND, ME 04106
(207) 775-1121
DHA@MAINE.RR.COM

DRAWN:	HME	DATE:	NOV 2002
DESIGNED:	MJD	SCALE:	1" = 10'
CHECKED:	MJD	JOB NO.	1916
FILE NAME:	1916/ELEC/VAULT.DWG		
SHEET	C-1		

KEYED NOTES:

1. 3/4" CONDUIT WITH 1-6 CONDUCTOR #18 CONTROL CABLE TO BMS CONTROL PANEL IN BOILER ROOM.
2. PROVIDE POWER FROM PANEL "A". REFER TO SHEET E1-3. PROVIDE SPARE 3/4" CONDUIT WITH PULL WIRE TO BOILER ROOM.
3. 3/4" CONDUIT WITH 1-6 CONDUCTOR #18 CONTROL CABLE TO GENERATOR CONTROL PANEL

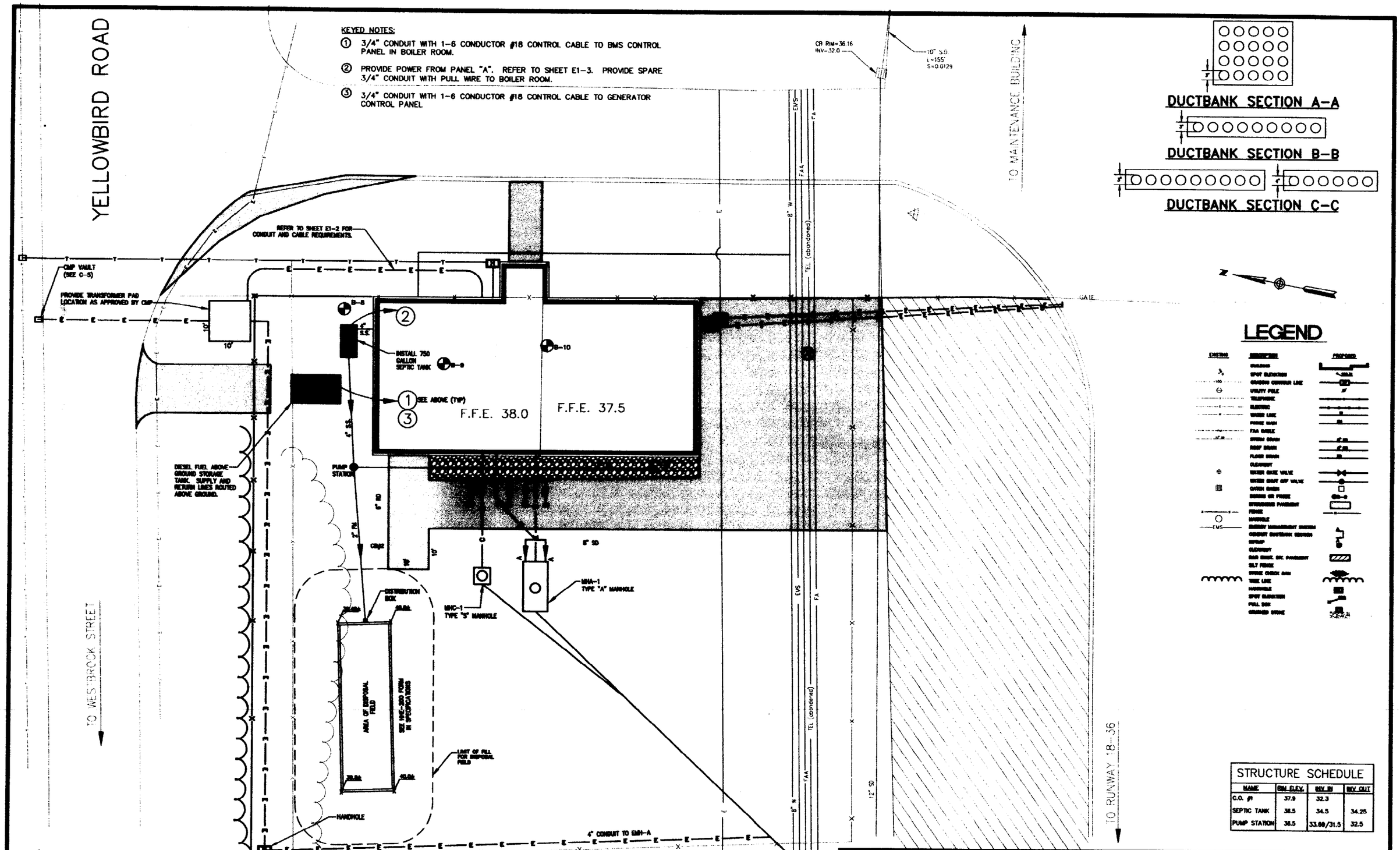

STRUCTURE SCHEDULE

NAME	RIM ELEV.	INV IN	INV OUT
C.O. #1	37.9	32.3	
SEPTIC TANK	36.5	34.5	34.25
PUMP STATION	36.5	33.88/31.5	32.5

REV	DATE	DESCRIPTION
1	7/27/03	ISSUED FOR BID

REVISIONS

STATE OF MAINE MICHAEL J. DELUCA 3448

P.E. MICHAEL J. DeLUCA
LIC. # 3448

PROJECT: AIRFIELD LIGHTING VAULT AND CONCRETE ENCASED DUCT
AIP-3-23-0038-43

SHEET TITLE: UTILITY PLAN

CLIENT: PORTLAND INTERNATIONAL JETPORT
PORTLAND, MAINE

DeLUCA-HOFFMAN ASSOCIATES, INC.
776 MAIN STREET, SUITE 4
SOUTH PORTLAND, ME 04106
(207) 775-1121
DHA@MAINE.RR.COM

DRAWN: HME	DATE: NOV 2002
DESIGNED: MJD	SCALE: 1"=10'
CHECKED: MJD	JOB NO. 1916
FILE NAME: 1916/ELEC/VAULT.DWG	
SHEET C-2	

2:\1916\elec\VAULT.dwg, UTILITY, 07/24/2003 10:19:40 AM, cadtermuis

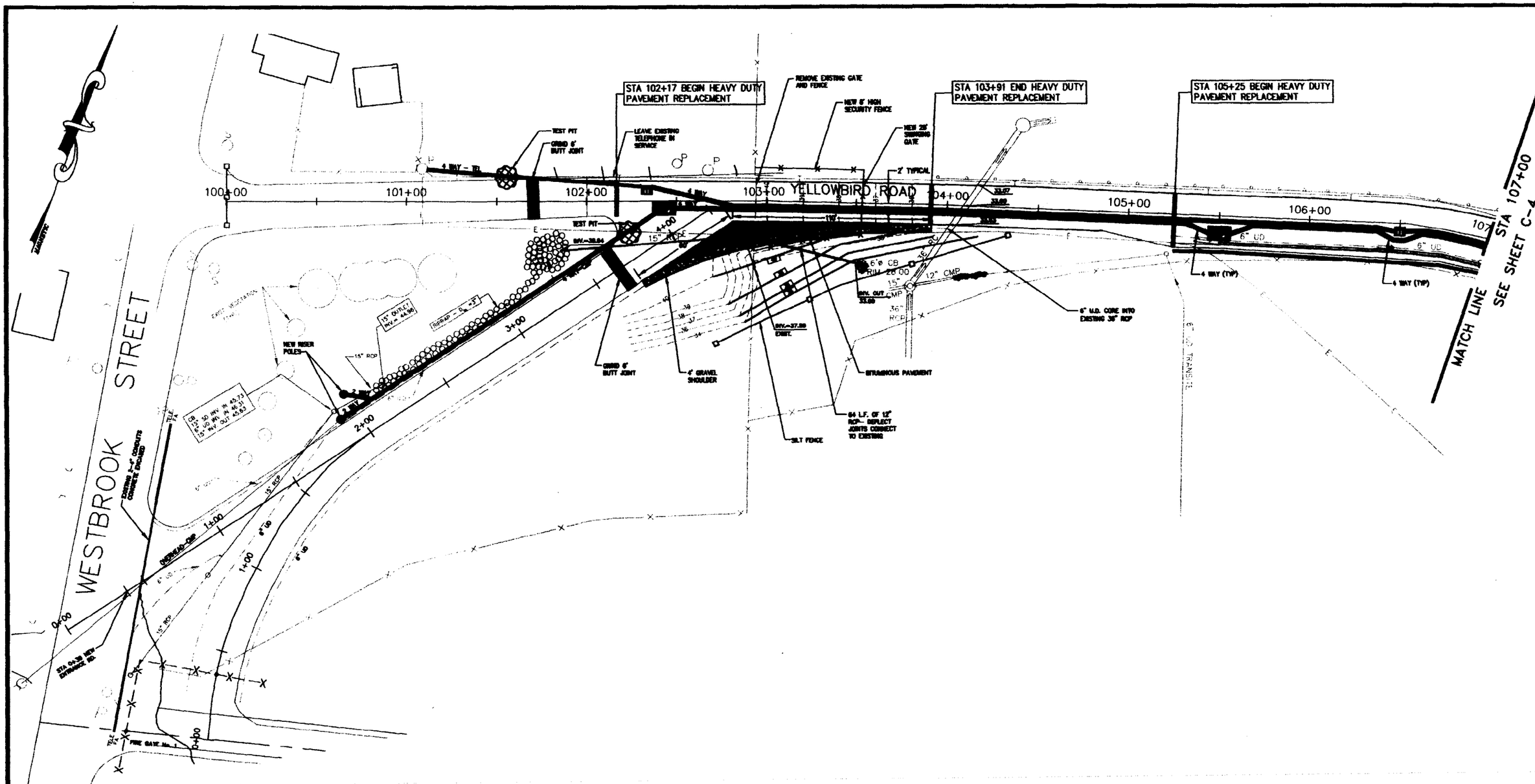

GRAPHIC SCALE

(IN FEET)
1 inch = 50 ft.

REV	DATE	DESCRIPTION
1	7/07/03	ISSUED FOR BID

REVISIONS

STATE OF MAINE
MICHAEL J. DELUCA
23448

P.E. MICHAEL J. DELUCA
LIC. # 3448

PROJECT
AIRFIELD LIGHTING VAULT AND CONCRETE ENCASED DUCT
AIP-3-23-0006-43

SHEET TITLE
CONCRETE ENCASED DUCT
YELLOWBIRD ROAD
START TO STA 107+00

CLIENT
PORTLAND INTERNATIONAL JETPORT
PORTLAND, MAINE

DeLUCA-HOFFMAN ASSOCIATES, INC.
770 HIGH STREET, SUITE B
SOUTH PORTLAND, ME 04106
(207) 772-4311
DHA@DELUCAHOFFMAN.COM

DRAWN:	HME	DATE:	NOV 2002
DESIGNED:	MJD	SCALE:	1"=50'
CHECKED:	MJD	JOB NO.	1016L01
FILE NAME:	1016SLBCWS-ABYELLOWBIRD		
SHEET	C-3		

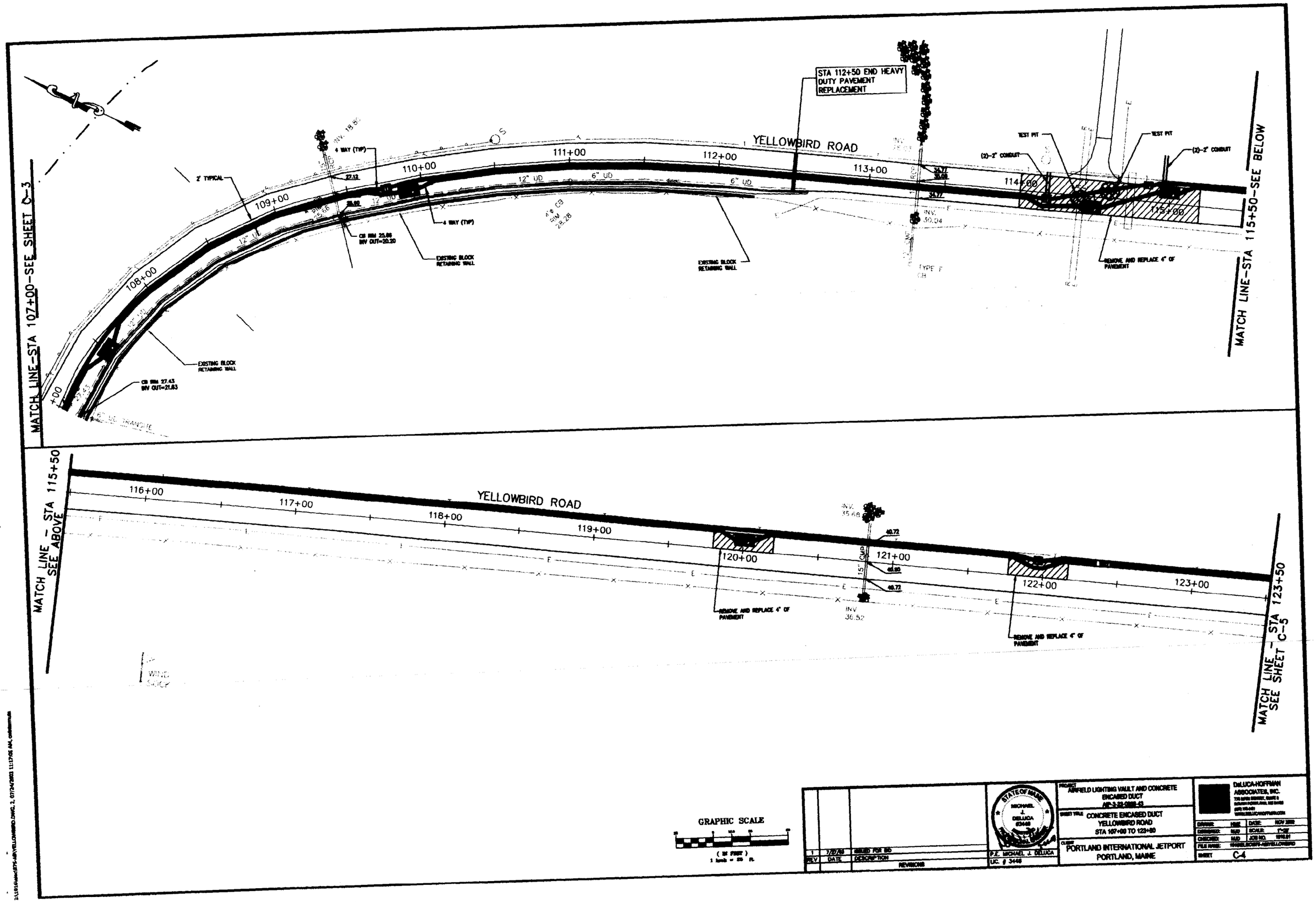

REV	DATE	DESCRIPTION
1	7/8/08	ISSUED FOR BID

REVISIONS

STATE OF MAINE
MICHAEL J. DELUCA
6348
P.E. MICHAEL J. DELUCA
LIC. # 3448

PROJECT: AIRFIELD LIGHTING VAULT AND CONCRETE ENCASED DUCT
AIP-3-23-0008-33

SHEET TITLE: CONCRETE ENCASED DUCT YELLOWBIRD ROAD STA 107+00 TO 123+50

CLIENT: PORTLAND INTERNATIONAL JETPORT PORTLAND, MAINE

DeLUCA-HOFFMAN ASSOCIATES, INC.

DRAWN:	MMK	DATE:	NOV 2008
DESIGNED:	MJD	SCALE:	1"=20'
CHECKED:	MJD	JOB NO.	1016.01
FILE NAME:	1016BLBOWR-ABYELLOWBIRD		
SHEET	C-4		

MATCH LINE – STA 123+50 SEE SHEET C-4

124+00
125+00
126+00
127+00
128+00
129+00
130+00
131+00
132+00

YELLOWBIRD ROAD

INV 33.73

44.04
44.92
45.00

REMOVE AND REPLACE 4" OF PAVEMENT
4 WAY (TYP)

REMOVE AND REPLACE 4" OF PAVEMENT
6" PVC PIPE
TEST PIT
4 WAY (TYP)

42.14
42.63
43.19

SLOPE REPAIR SEE SHEET C-12
REMOVE AND REPLACE 4" OF PAVEMENT
TEST PIT
(2)-2" CONDUIT
FED XPRESS

MATCH LINE – STA 132+25

MATCH LINE – STA 132+25

133+00
134+00
135+00
136+00
137+00
138+00
138+03.81
139+00
140+00

YELLOWBIRD ROAD

INV 35.80

12" CMP

REMOVE AND REPLACE 4" OF PAVEMENT
TELE BOX
(2)-2" CONDUIT

REMOVE AND REPLACE 4" OF PAVEMENT
(2)-4" CONDUIT
INV 31.06
(2)-4" CONDUIT
GRIND 6' BUTT JOINT
TO MAINTENANCE
SEE SHEET C-2 FOR WIDENING
SITE OF NEW ELECTRICAL VAULT
(2)-4" CONDUIT
U/B'S
MH'S
GAS PUMP
GV
FED XPRESS
NORTHEAST AIR

GRAPHIC SCALE

(IN FEET)
1 inch = 25 ft.

REV	DATE	DESCRIPTION
1	7/27/05	ISSUED FOR BID

REVISIONS

STATE OF MAINE
MICHAEL J. DELUCA
6448

P.E. MICHAEL J. DELUCA
LIC. # 3448

PROJECT: AIRFIELD LIGHTING VAULT AND CONCRETE ENCASED DUCT
AIP-3-23-0006-41

SHEET TITLE: CONCRETE ENCASED DUCT
YELLOWBIRD ROAD
STA 123+50 TO END

CLIENT: PORTLAND INTERNATIONAL JETPORT
PORTLAND, MAINE

DeLUCA-HOFFMAN ASSOCIATES, INC.
770 MAIN STREET, SUITE 8
SOUTH PORTLAND, ME 04106
(207) 775-1333
WWW.DELUCAHOFFMAN.COM

DRAWN:	HME
DATE:	NOV 2002
DESIGNED:	MJD
SCALE:	1"=25'
CHECKED:	MJD
JOB NO.	99-8.01
FILE NAME:	1998\JOB\99-8\YELLOWBIRD
SHEET	C-5

WEDNESDAY, MAY 28, 2003 11:22:21 AM, T:\DWG\CADWORK\TTLEVIEW-AC\C\99-8\01

YELLOWBIRD ROAD

PERIMETER ROAD

FEDERAL EXPRESS BUILDING

CONCRETE APRON

CUSTOMS BUILDING

TANKS

JETPORT MAINTENANCE BUILDING

TAXIWAY "H"

AIRBORNE FREIGHT

NATIONAL WEATHER

EDGE OF OLD RUNWAY

FIELD DRAIN

LEAD IN LINE

6 WAY CONCRETE ENCASED DUCT

CONTROL CABLE IN 6 WAY CONCRETE ENCASED DUCT / 4" CONDUIT FOR FUTURE CMP

CONTROL CABLE

6 WAY DUCT

NET, CMP, FIRE ALARM

POWER TO TANKER

POWER TO DRUM TANKER

TEST PIT

EMH-A

SEE SHEET 2

ACCESS GATE

TEMPORARY BARRICADES DURING WORK SPACED 10' APART. AIRPORT WILL SUPPLY BARRICADES, CONTRACTOR TO SUPPLY FLASHING RED LIGHTS.

2" DRAIN FROM LIGHT TO CB

2" DRAIN FROM EMH TO CB

CB 42.65

MH# 1A 45.10

LEGEND

EXISTING	PROPOSED	
○		RUNWAY LIGHT
○		TAXIWAY LIGHT
▭		GUIDANCE SIGN
	▬▬	CONCRETE ENCASED DUCT BANK
		ELECTRICAL CABLE
EMH	⊗ A-EMH A	AIRFIELD ELECTRICAL MANHOLE
50' EL		CONTOUR
		STORM DRAIN
●		CATCH BASIN
	●	TEST PIT

GRAPHIC SCALE

(IN FEET)
1 inch = 50 ft.

REV	DATE	DESCRIPTION
1	7/27/05	ISSUED FOR BID

REVISIONS

STATE OF MAINE MICHAEL J. DELUCA 3448

P.E. MICHAEL J. DELUCA
LIC. # 3448

PROJECT: AIRFIELD LIGHTING VAULT AND CONCRETE ENCASED DUCT
AIP-3-23-0008-43

SHEET TITLE: PLAN VIEW - 20 WAY DUCT

CLIENT: PORTLAND INTERNATIONAL JETPORT
PORTLAND, MAINE

DeLUCA-HOFFMAN ASSOCIATES, INC.
770 MAIN STREET, SUITE 8
SOUTH PORTLAND, ME 04106
(207) 775-1121
WWW.DELUCAHOFFMAN.COM

DRAWN:	HME	DATE:	NOV 2002
DESIGNED:	MJD	SCALE:	1"=50'
CHECKED:	MJD	JOB NO.	1010.01
FILE NAME:	1010SELECIPS-BLD.DWG		

SHEET C-6

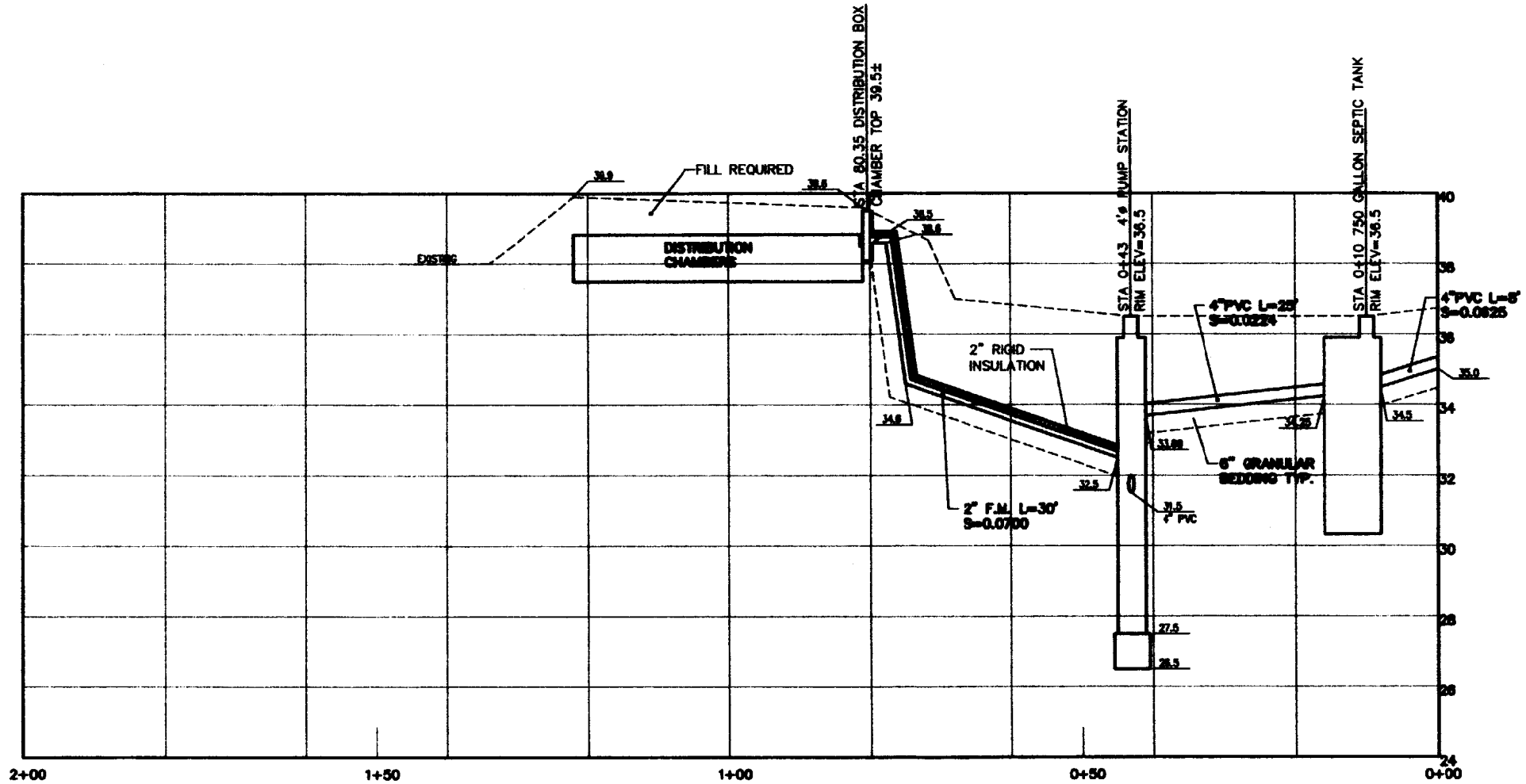

PROFILE A

SCALE:
1" = 2' VERT.
1" = 10' HORIZ.

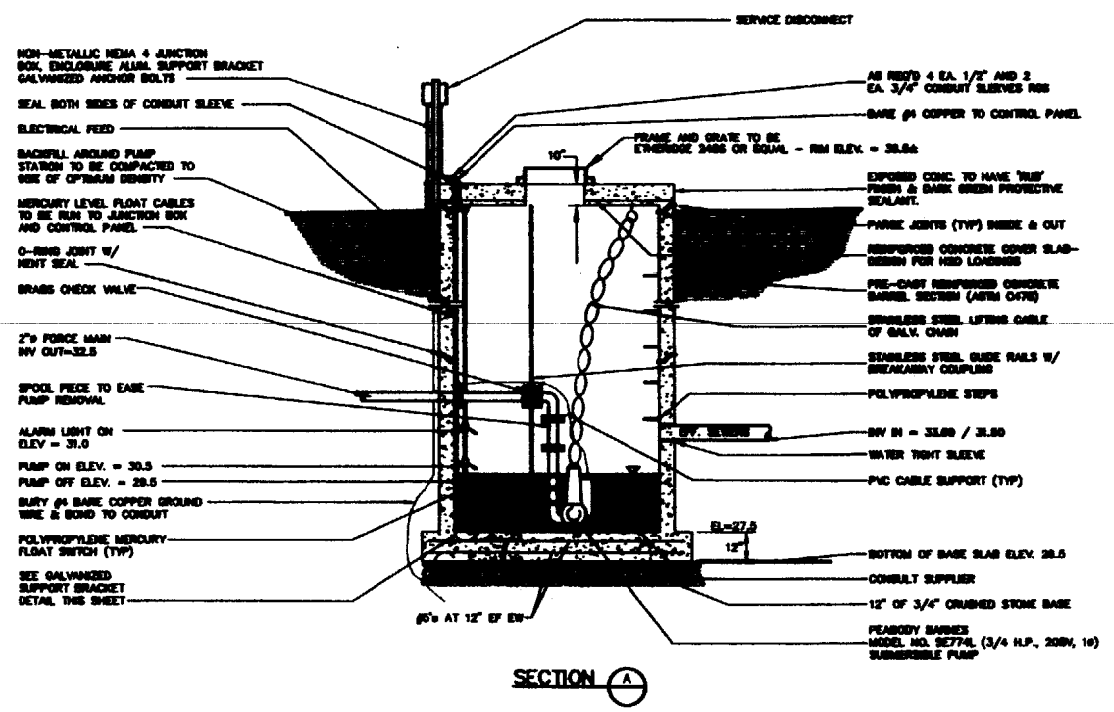

SECTION A

PUMP STATION

N.T.S.

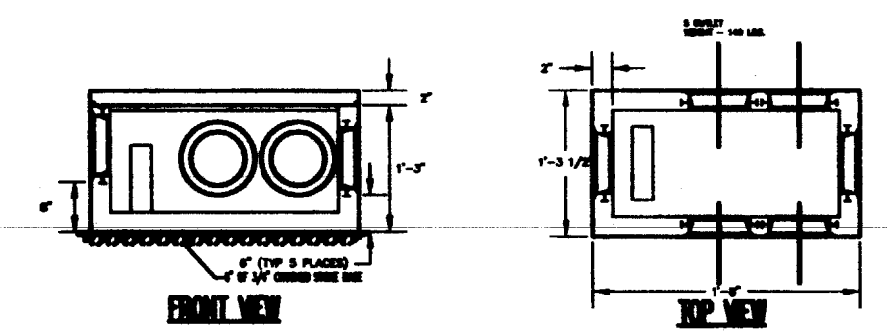

DISTRIBUTION BOX

N.T.S.

REV	DATE	DESCRIPTION
1	7/27/03	ISSUED FOR BID

REVISIONS

STATE OF MAINE — MICHAEL J. DELUCA #3446

P.E. MICHAEL J. DeLUCA
LIC. # 3446

PROJECT: AIRFIELD LIGHTING VAULT AND CONCRETE ENCASED DUCT
AIP-3-23-0028-03

SHEET TITLE: PUMP STATION DETAIL AND PROFILE

CLIENT: PORTLAND INTERNATIONAL JETPORT
PORTLAND, MAINE

DeLUCA–HOFFMAN ASSOCIATES, INC.
778 MAIN STREET, SUITE 8
SOUTH PORTLAND, ME 04106
(207) 775-1121
DHA@MAINE.RR.COM

DRAWN:	HME	DATE:	NOV 2002
DESIGNED:	MJD	SCALE:	AS SHOWN
CHECKED:	MJD	JOB NO.	1916
FILE NAME: 1916/ELEC/VAULT.DWG			
SHEET	C-7		

\1916\dwg\VAULT.dwg, DETS, 07/24/2003 12:57:24 PM, cmhermite

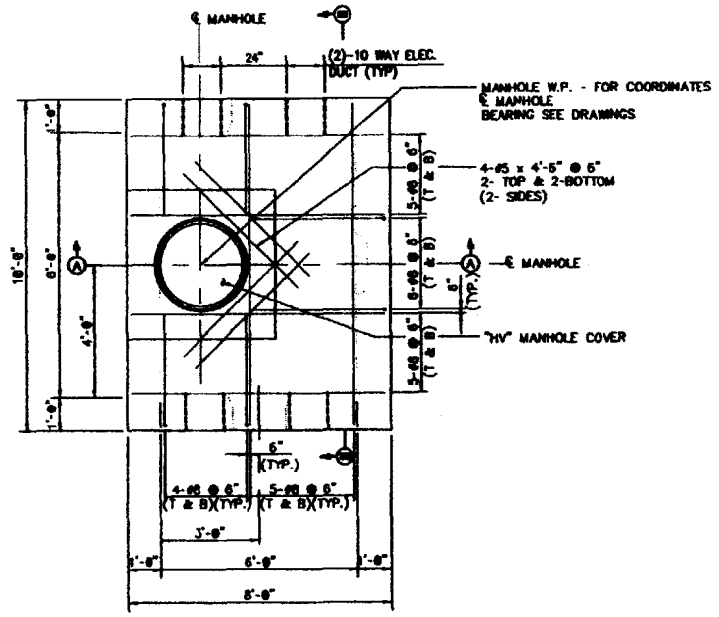

TOP SLAB PLAN

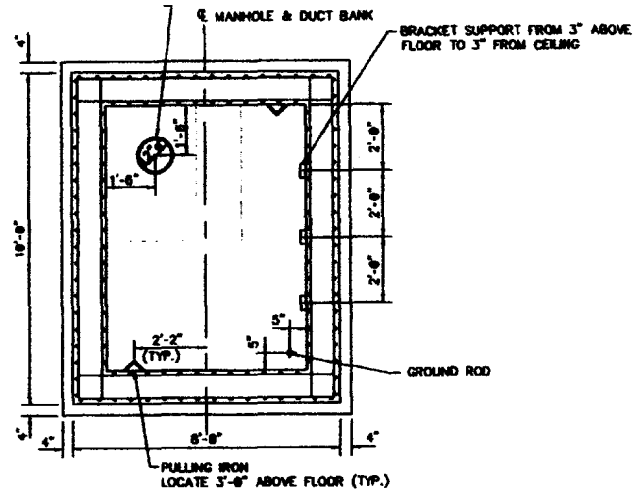

BOTTOM SLAB PLAN

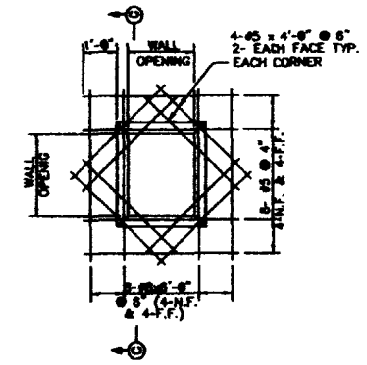

TYP. REINF. AROUND DUCT OPENING

NO SCALE

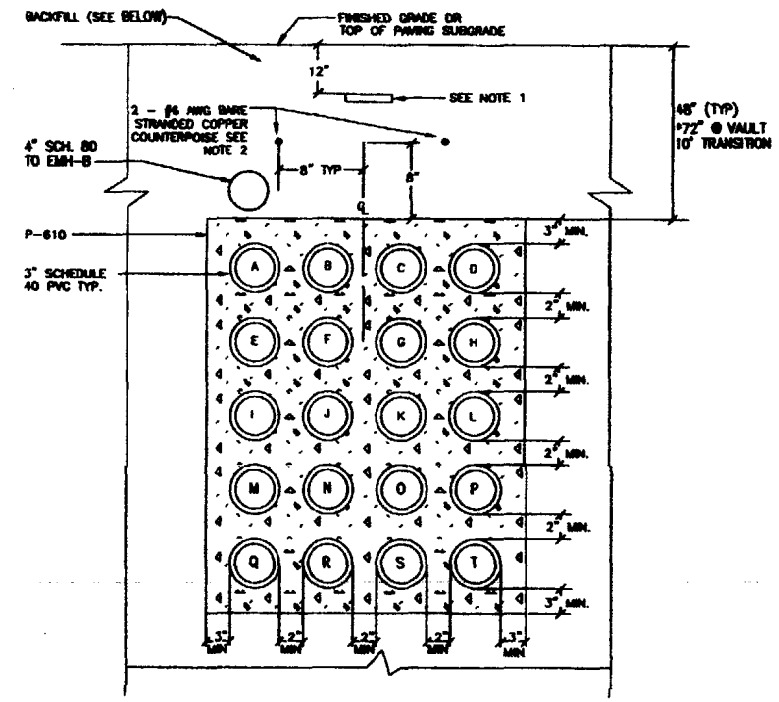

20 WAY 3" DUCT BANK CONCRETE ENCASED

N.T.S.

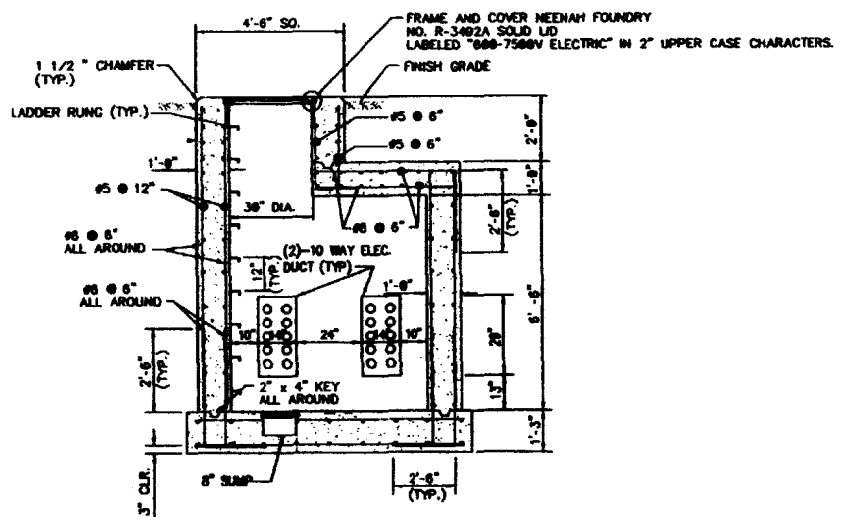

SECTION A-A
MANHOLE EMH-A

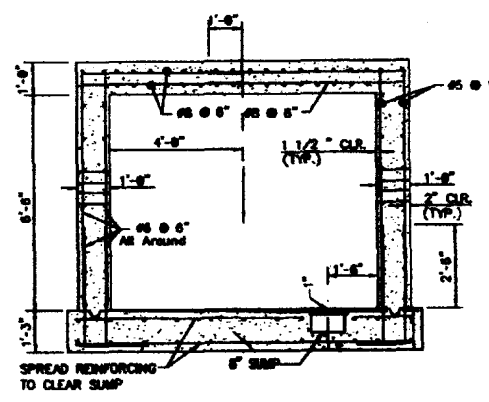

SECTION B-B

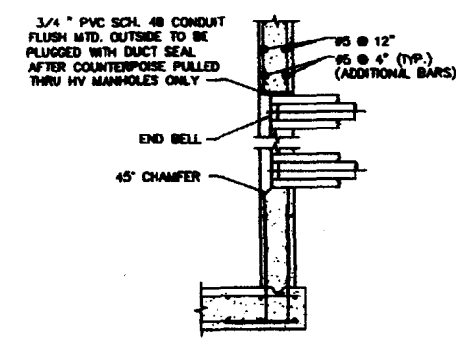

SECTION C-C

TYPICAL DUCT INSTALLATION

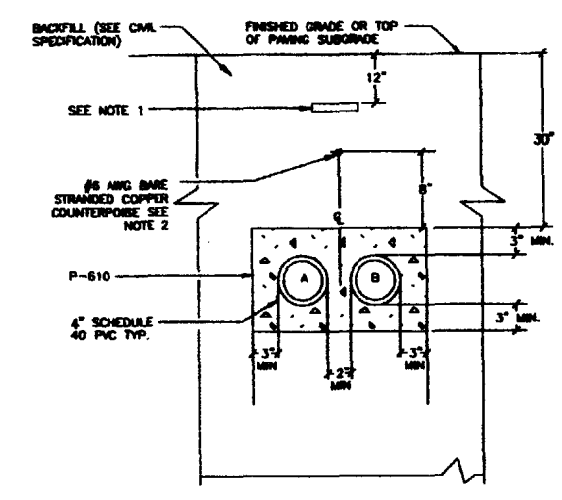

2 WAY 4" DUCT BANK (UNDER PAVEMENT) CONCRETE ENCASED

N.T.S.

NOTE: USE SCHEDULE 80 PVC WHEN NOT CONCRETE ENCASED

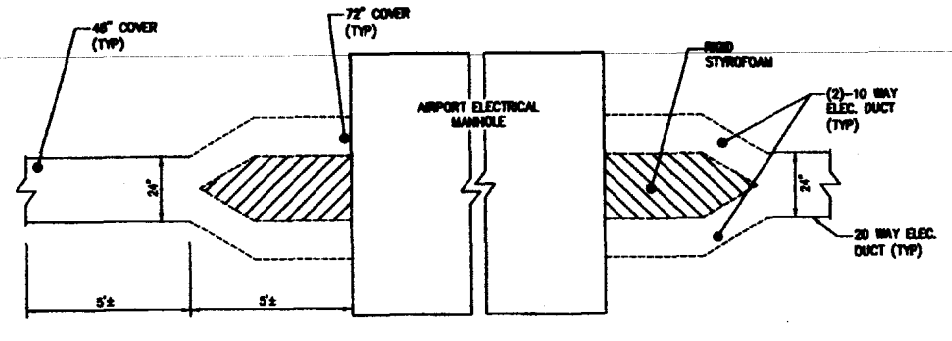

AIRFIELD ELECTRICAL MANHOLE
& 20 WAY DUCT CONNECTION DETAIL

N.T.S.

CONCRETE ENCASED DUCT BANK NOTES:

1. INSTALL AN APPROVED, RED PLASTIC, DETECTABLE, MAGNETIC, 3" WIDE TAPE 12" BELOW FINISHED GRADE ABOVE ALL PORTIONS OF DUCT BANKS AND CONDUITS NOT INSTALLED UNDER AIRFIELD PAVEMENTS.

2. THE COUNTERPOISE SHALL BE POSITIONED ACCORDINGLY:
   A) 8" U.N.O. ABOVE THE DUCT BANK (INCLUDING CONCRETE) CENTERLINE WHEN INSTALLED AT RIGHT ANGLES TO OR UNDER PAVEMENT OR IN GRASSY AREAS.

   B) TWO COUNTERPOISE CONDUCTORS MAY BE REQUIRED, SEE DUCTBANK DETAILS.

3. THE DEPTH OF BURIAL TO THE TOP OF THE DUCT BANK MUST BE A MINIMUM OF 24" BELOW UNPAVED AREAS AND A MINIMUM OF 24" BELOW THE SUBGRADE AT THE CROWN OF ANY PAVEMENT. ALSO SEE SPECIFICATIONS AND AIRFIELD DUCT PLANS.

4. ALL BACKFILL SHALL COMPLY WITH THE CIVIL SPECIFICATIONS.

REV	DATE	DESCRIPTION
1	7/31/03	ISSUED FOR BID

REVISIONS

STATE OF MAINE — MICHAEL J. DELUCA #3449

P.E. MICHAEL J. DeLUCA
LIC. # 3449

PROJECT: AIRFIELD LIGHTING VAULT AND CONCRETE ENCASED DUCT
AIP-3-23-0039-03

SHEET TITLE: CONCRETE MANHOLE AND DUCT DETAILS -AIRSIDE

CLIENT: PORTLAND INTERNATIONAL JETPORT
PORTLAND, MAINE

DeLUCA–HOFFMAN ASSOCIATES, INC.
778 MAIN STREET, SUITE 8
SOUTH PORTLAND, ME 04106
(207) 775-1121
DHA@MAINE.RR.COM

DRAWN:	HMF	DATE:	NOV 2002
DESIGNED:	MJD	SCALE:	AS SHOWN
CHECKED:	MJD	JOB NO.	1916.01

FILE NAME: 1916/ELEC/VAULT.DWG

SHEET C-8

1916\elec\VAULT.dwg, DETA, 07/22/2003 04:19:54 PM, cwilkerson

SCHEDULE OF BASE BACKFILL				
TYPE OF PIPE	BEDDING MATERIAL	SPECIAL BACKFILL	SPECIAL BACKFILL COVER "A" (IN)	SELECT BACKFILL
CONCRETE	GRANULAR AASHTO M145-40 A-3 OR BETTER	GRANULAR AASHTO M145-40 A-3 OR BETTER	12	GRANULAR AASHTO M145-40 A-3 OR BETTER

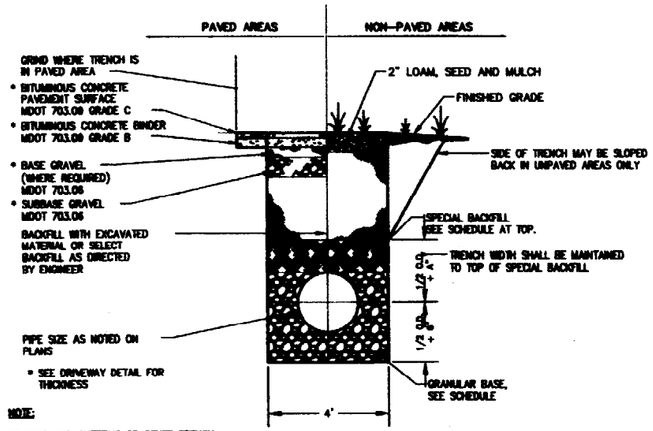

NOTE:

BRACING AND SHEETING OR OTHER TRENCH PROTECTION TO BE PROVIDED TO MEET APPLICABLE STATE AND O.S.H.A. SAFETY STANDARDS. ALL SUCH TRENCH PROTECTION TO BE THE RESPONSIBILITY OF THE CONTRACTOR.

TYPICAL STORM DRAIN TRENCH SECTION

N.T.S.

EMBEDDING DETAIL

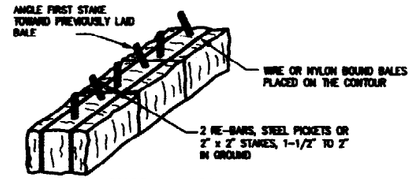

ANCHORING DETAIL

AT CATCH BASIN INLET

CONSTRUCTION SPECIFICATIONS

1. BALES SHALL BE PLACED IN A ROW WITH ENDS TIGHTLY ABUTTING THE ADJACENT BALES.
2. EACH BALE SHALL BE EMBEDDED IN THE SOIL A MINIMUM OF 4".
3. BALES SHALL BE SECURELY ANCHORED IN PLACE BY STAKES OR RE-BARS DRIVEN THROUGH THE BALES. THE FIRST STAKE IN EACH BALE WAS ANGLED TOWARD PREVIOUSLY LAID BALE TO FORCE BALES TOGETHER.
4. INSPECTION WILL BE FREQUENT AND REPAIR OR REPLACEMENT SHALL BE MADE PROMPTLY AS NEEDED.
5. BALES SHALL BE REMOVED WHEN THEY HAVE SERVED THEIR USEFULNESS SO AS NOT TO BLOCK OR IMPEDE STORM FLOW OR DRAINAGE.

STRAW OR HAY BALE BARRIER

N.T.S.

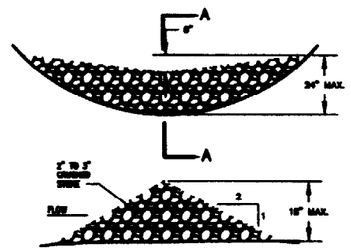

SECTION A-A

L = THE DISTANCE SUCH THAT POINTS A AND B ARE OF EQUAL ELEVATION

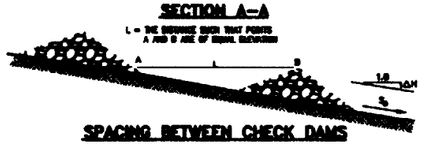

SPACING BETWEEN CHECK DAMS

S_0 (FT./FT.)	L (FT.)
0.010	100
0.020	50
0.030	33
0.040	25
0.050	20
0.100	10

STONE CHECK DAM

N.T.S.

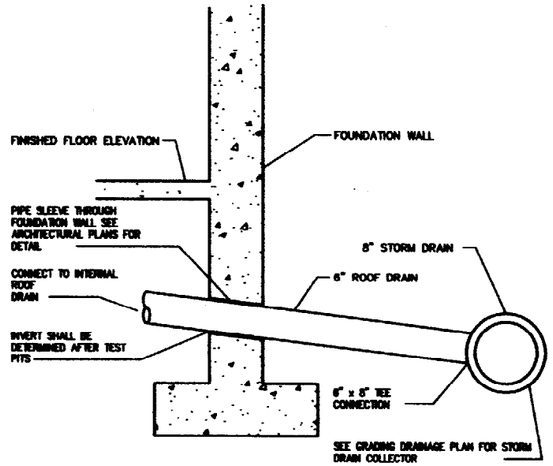

ROOF DRAIN DETAIL

N.T.S.

1. SEE GRADING AND DRAINAGE PLAN FOR LOCATION OF 8" STORM SEWER EXIT POINTS FROM BUILDING.

2. CONNECT FOUNDATION DRAIN TO ROOF DRAIN AT SOUTHWEST CORNER WITH TEE FITTING.

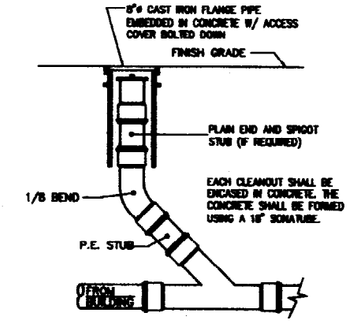

PVC CLEANOUT DETAIL

N.T.S.

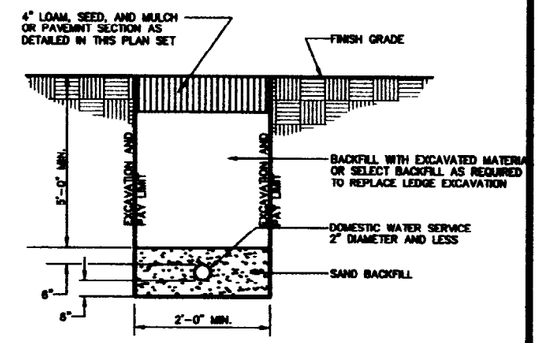

WATER SERVICES TRENCH SECTION

N.T.S.

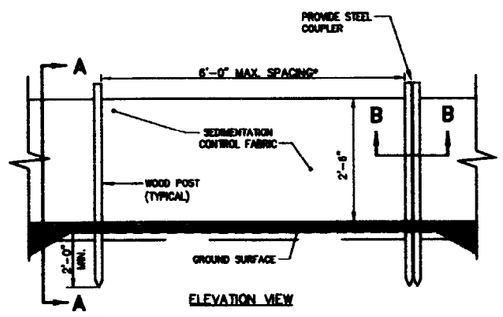

ELEVATION VIEW

*NOTE:
THE SILT FENCE SHOULD HAVE A MINIMUM STAKING OF 6' UNLESS THE FENCE IS SUPPORTED BY WIRE FENCE REINFORCEMENT A MINIMUM 14 GAUGE AND WITH A MINIMUM MESH SPACING OF 6".

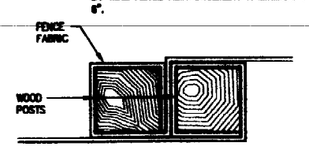

SECTION B-B

NOTE:
BOTTOM OF SILT FENCE MUST BE TOED INTO GROUND OR NO PAYMENT SHALL BE MADE.

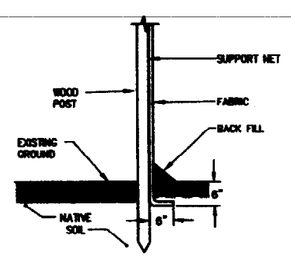

SECTION A-A

SILTATION FENCE DETAIL

N.T.S.

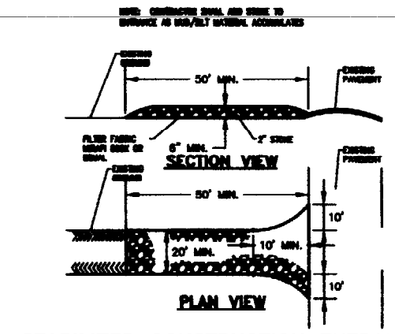

STABILIZED CONSTRUCTION ENTRANCE

N.T.S.

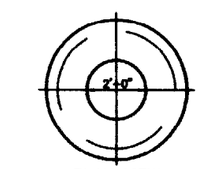

PLAN VIEW

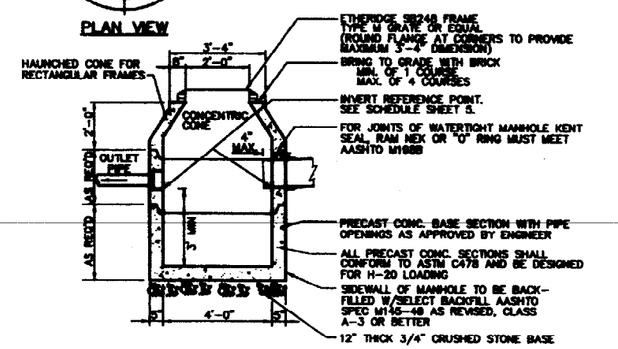

4'-0" PRECAST CATCH BASIN

N.T.S.

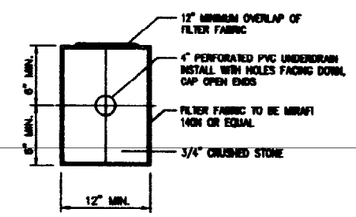

TYPICAL FOUNDATION DRAIN

N.T.S.

REV	DATE	DESCRIPTION
1	7/27/03	ISSUED FOR BID

REVISIONS

STATE OF MAINE — MICHAEL J. DELUCA 3448

P.E. MICHAEL J. DeLUCA
LIC. # 3448

PROJECT: AIRFIELD LIGHTING VAULT AND CONCRETE ENCASED DUCT
AIP-3-23-0020-13

SHEET TITLE: EROSION CONTROL DETAILS AND TRENCH DETAILS

CLIENT: PORTLAND INTERNATIONAL JETPORT
PORTLAND, MAINE

DeLUCA-HOFFMAN ASSOCIATES, INC.
778 MAIN STREET, SUITE 8
SOUTH PORTLAND, ME 04106
(207) 775-1121
DHA@MAINE.RR.COM

DRAWN:	HME	DATE:	NOV 2002
DESIGNED:	MJD	SCALE:	AS SHOWN
CHECKED:	MJD	JOB NO.	1918

FILE NAME: 1918/ELEC/VAULT.DWG

SHEET C-9

Z:\1918\elec\VAULT.dwg, DETT, 07/22/2003 04:34:15 PM, cadmanmb

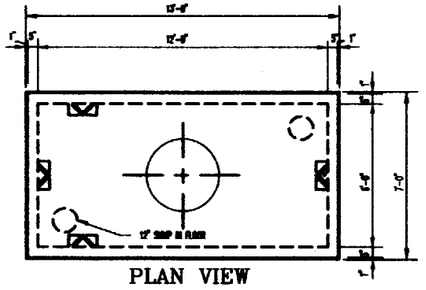

PLAN VIEW

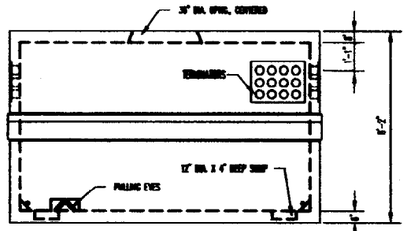

SIDE VIEW

ITEM NO. 0626

NOTES:
1. CONCRETE: 5,000 PSI @ 28 DAYS.
2. REINFORCING PER ASTM A615 GRADE 60. 60,000 PSI YIELD.
3. DESIGN LOADING PER AASHTO HS20-44 AND ACI 318-83.
4. INSERTS, PULLING EYES, DUCT OPENINGS, OR TERMINATORS CAST IN AS REQUIRED.
5. JOINTS SEALED WITH 1/2" ASPHALT SEALING STRIPS.
6. 5' GROUND ROD REQUIRED IN EACH MANHOLE. ROD TO BE LOCATED IN CORNER OF MANHOLE AND SIX INCHES OF ROD WILL EXTEND INTO MANHOLE FOR BONDING. ROD MAY BE INSTALLED HORIZONTALLY SIX INCHES ABOVE FLOOR.
7. USE 32" COVER AND FRAME MARKED CMP Co.

CMP VAULT

N.T.S.

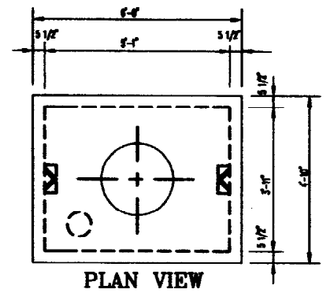

PLAN VIEW

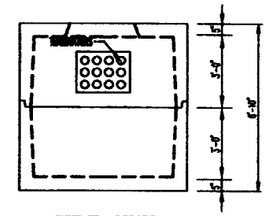

SIDE VIEW

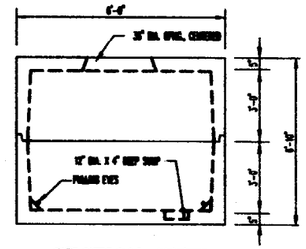

SECTION VIEW

NOTES:
1. CONCRETE: 5,000 PSI @ 28 DAYS.
2. REINFORCING PER ASTM A615 GRADE 60. 60,000 PSI YIELD.
3. DESIGN LOADING PER AASHTO HS20-44 AND ACI 318-83.
4. INSERTS, PULLING EYES, DUCT OPENINGS, OR TERMINATORS CAST IN AS REQUIRED.
5. JOINTS SEALED WITH 1/2" ASPHALT SEALING STRIPS.
6. 5' GROUND ROD REQUIRED IN EACH MANHOLE. ROD TO BE LOCATED IN CORNER OF MANHOLE AND SIX INCHES OF ROD WILL EXTEND INTO MANHOLE FOR BONDING. ROD MAY BE INSTALLED HORIZONTALLY SIX INCHES ABOVE FLOOR.
7. USE 32" COVER AND FRAME MARKED CMP Co.

TELEPHONE VAULT

N.T.S.

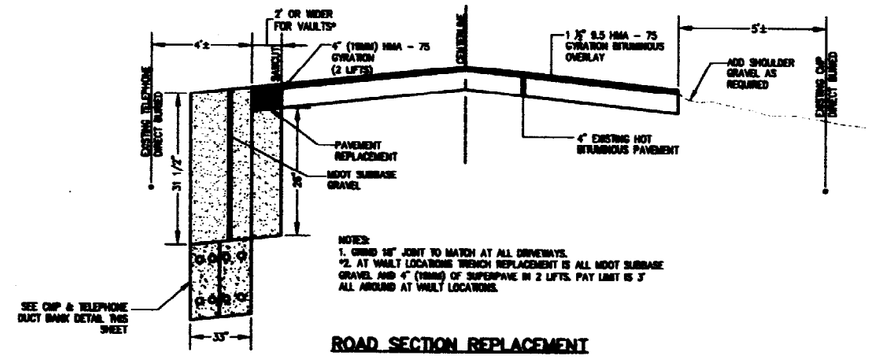

NOTES:
1. GRIND 18" JOINT TO MATCH AT ALL DRIVEWAYS.
*2. AT VAULT LOCATIONS TRENCH REPLACEMENT IS ALL MDOT SUBBASE GRAVEL AND 4" (100MM) OF SUPERPAVE IN 2 LIFTS. PAY LIMIT IS 3' ALL AROUND AT VAULT LOCATIONS.

ROAD SECTION REPLACEMENT
STA 115+15 TO END

N.T.S.

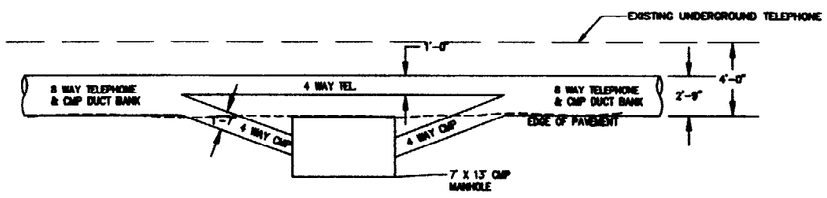

AT CMP MANHOLE (SHOULDER CONSTRUCTION)

N.T.S.

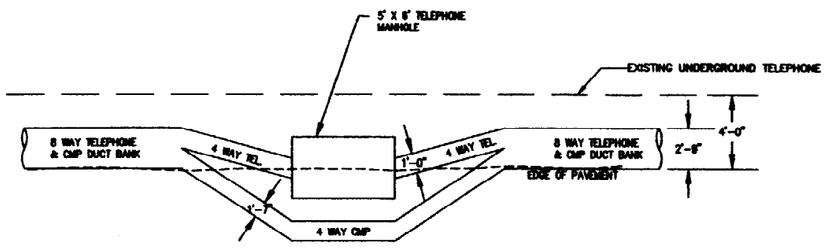

AT TELEPHONE MANHOLE (SHOULDER CONSTRUCTION)

N.T.S.

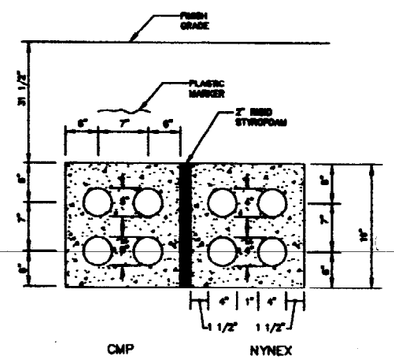

CMP & TELEPHONE DUCT BANK

N.T.S.

NOTE:
1. 4' PAY WIDTH TRENCH OF 8 WAY, 3' PAY WIDTH TRENCH 4 WAY, 3' PAY WIDTH TRENCH OF 2 WAY

2. EMBED A BARE 4/0 COPPER NEUTRAL CONDUCTOR IN THE DUCT LINE ENVELOPE

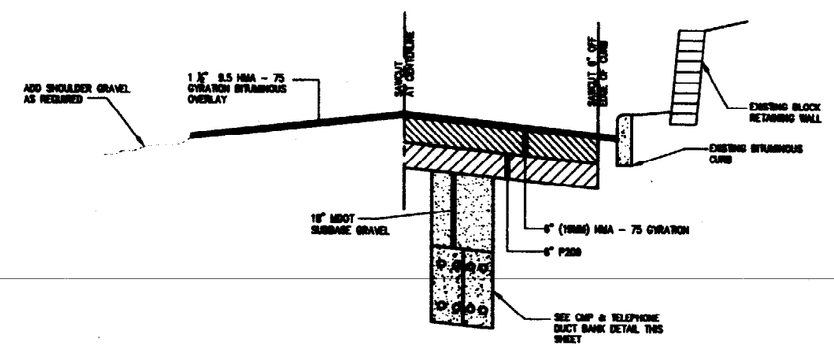

HEAVY DUTY ROAD SECTION REPLACEMENT
STA 102+17 TO STA 103+91
STA 105+25 TO STA 112+50

N.T.S.

NOTE:
HEAVY DUTY PAVEMENT SECTION ALSO USED AT MAINTENANCE ROAD WIDENING

REV	DATE	DESCRIPTION
1	7/22/03	ISSUED FOR BID

REVISIONS

STATE OF MAINE — MICHAEL J. DELUCA 3448 — P.E. MICHAEL J. DELUCA — LIC. # 3448

PROJECT: AIRFIELD LIGHTING VAULT AND CONCRETE ENCASED DUCT
AIP-3-23-0089-43

SHEET TITLE: UTILITY DETAILS / YELLOWBIRD ROAD. TRENCH REPLACEMENT

CLIENT: PORTLAND INTERNATIONAL JETPORT
PORTLAND, MAINE

DeLUCA-HOFFMAN ASSOCIATES, INC.

DRAWN:	HBB	DATE:	NOV 2002
DESIGNED:	MJD	SCALE:	N.T.S.
CHECKED:	MJD	JOB NO.	1996.01
FILE NAME:	1996.01C-10-AIRFIELD-YELLOWBIRD		
SHEET	C-10		

2:\1996\dwgs\875-AIRYELLOWBIRD.DWG, 4, 07/22/2003 04:39:00 PM, cartermarie

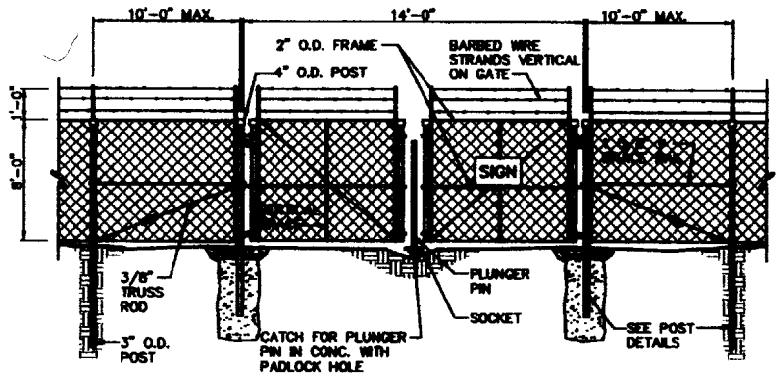

NOTE: CITY OF PORTLAND WILL PROVIDE CHAIN AND PADLOCK FOR EACH GATE.

14' SWINGING GATE
N.T.S.

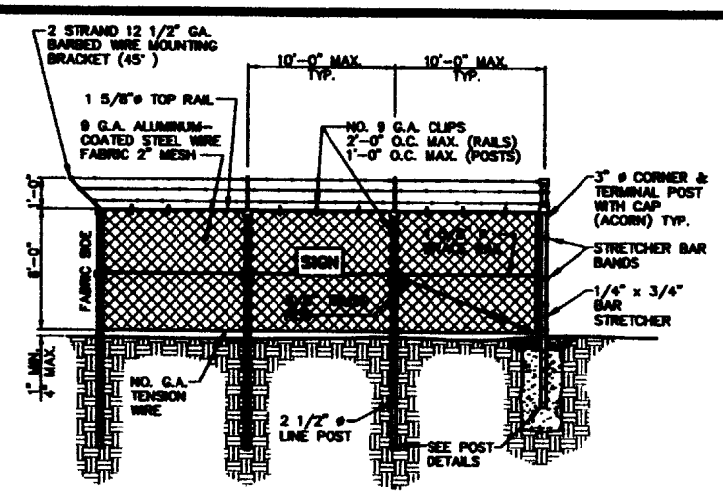

CHAIN LINK FENCE DETAIL
N.T.S.

DET021.DWG

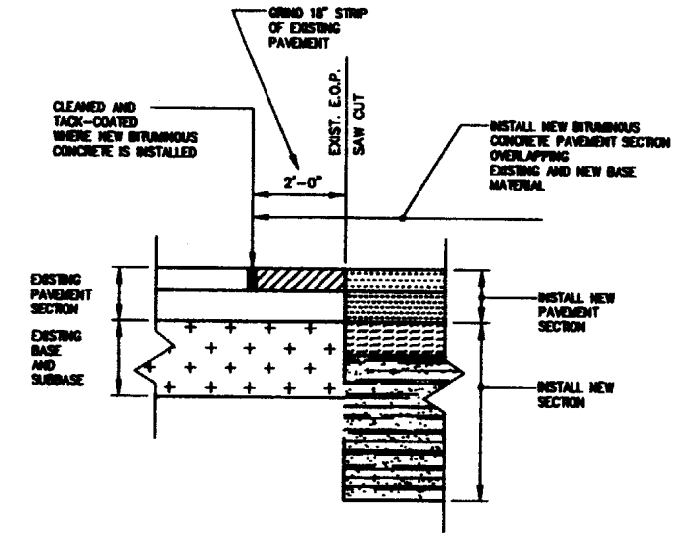

NEW PAVEMENT ADJACENT TO EXISTING PAVEMENT
N.T.S.

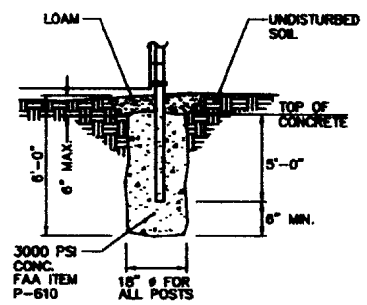

CORNER & TERMINAL POST DETAIL
N.T.S.

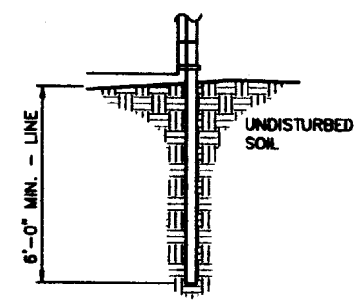

LINE POSTS TO BE DRIVEN INTO THE GROUND WITH THE MINIMUM DISTURBANCE TO SURROUNDING SOILS.

INTERMEDIARY LINE POST DETAIL
N.T.S.

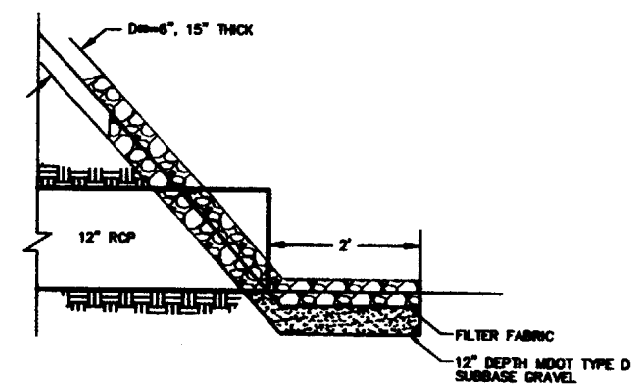

RIPRAP AT PIPE INLET/OUTLET
N.T.S.

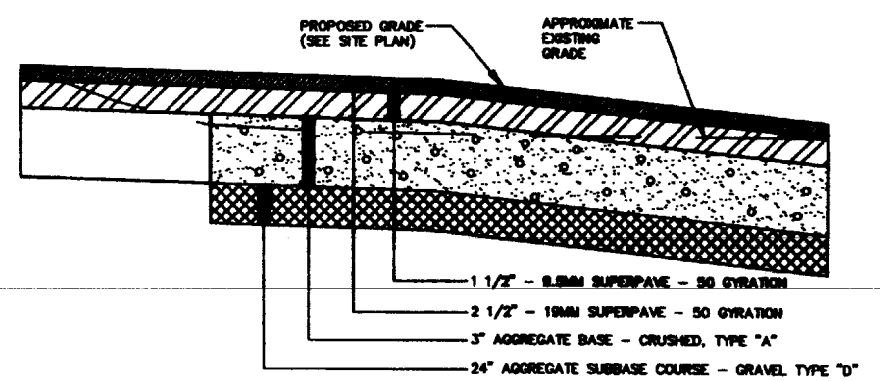

SECTION AT DRIVEWAY

DRIVEWAY CONSTRUCTION FOR ELECTRICAL VAULT
N.T.S.

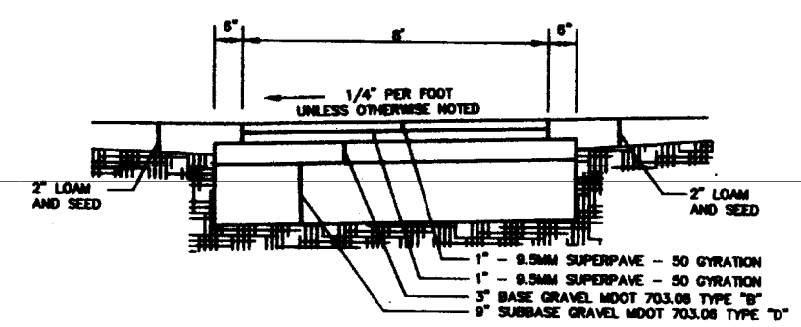

BITUMINOUS WALKWAY DETAIL
N.T.S.

REV	DATE	DESCRIPTION
1	7/07/03	ISSUED FOR BID

REVISIONS

STATE OF MAINE — MICHAEL J. DELUCA #3448 — P.E. MICHAEL J. DeLUCA — LIC. # 3448

PROJECT: AIRFIELD LIGHTING VAULT AND CONCRETE ENCASED DUCT
AIP-3-23-0050-03

SHEET TITLE: SITE DETAILS

CLIENT: PORTLAND INTERNATIONAL JETPORT, PORTLAND, MAINE

DeLUCA-HOFFMAN ASSOCIATES, INC.
778 MAIN STREET, SUITE 8
SOUTH PORTLAND, ME 04106
(207) 775-1333
SHA@MAINE.RR.COM

DRAWN:	HME	DATE:	NOV 2002
DESIGNED:	MJD	SCALE:	AS SHOWN
CHECKED:	MJD	JOB NO.	1916.01

FILE NAME: 1916/ELEC/VAULT.DWG

SHEET C-11

Z:\1916\dwgs\VAULT.dwg, DET1, 07/22/2003 04:41:59 PM, cshterman

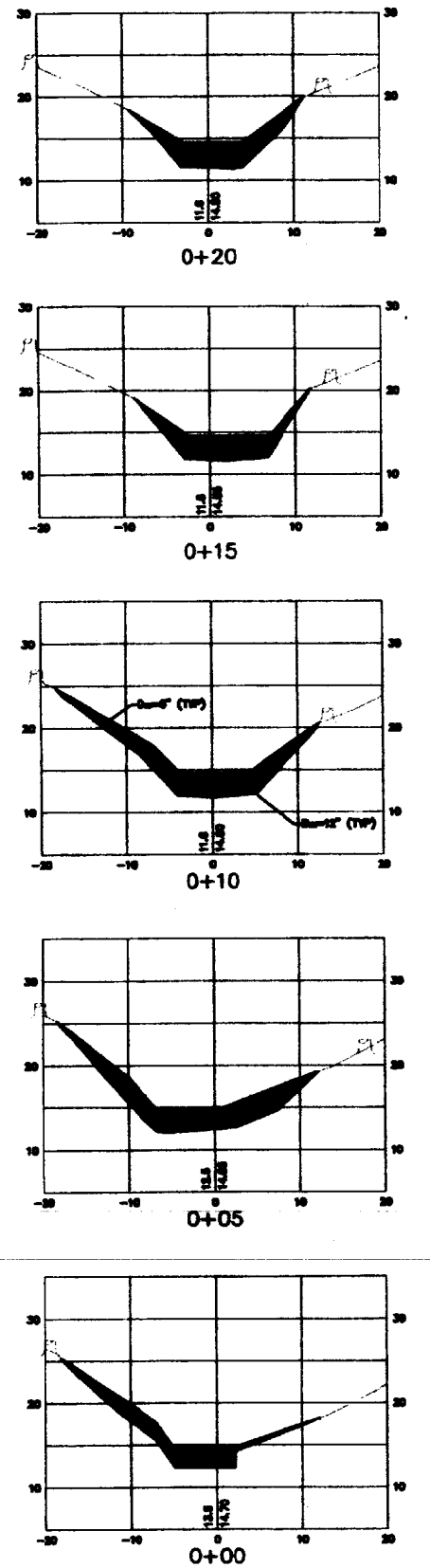

RIPRAP REPAIR PROFILES

SCALE: HORIZ & VERT: 1"=10'

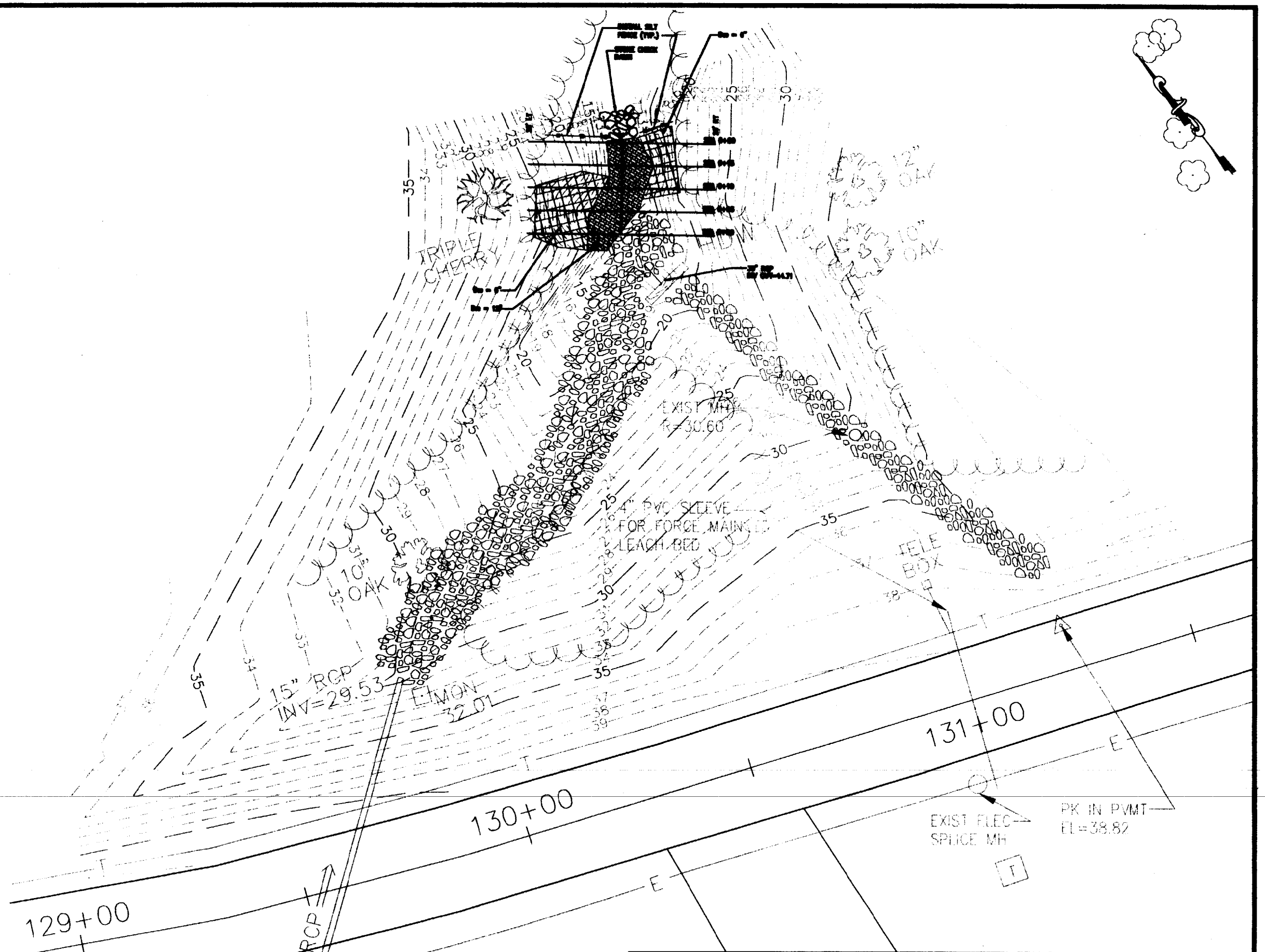

GRAPHIC SCALE

(IN FEET)
1 inch = 10 ft.

REV.	DATE	DESCRIPTION
1	7/07/03	ISSUED FOR BID

REVISIONS

STATE OF MAINE
MICHAEL J. DELUCA
6348
P.E.

P.E. MICHAEL J. DELUCA
LIC. # 3448

PROJECT
AIRFIELD LIGHTING VAULT AND CONCRETE ENCASED DUCT
AIP-3-23-0008-03

SHEET TITLE
RIPRAP REPAIR PLAN AND PROFILE
YELLOWBIRD ROAD

CLIENT
PORTLAND INTERNATIONAL JETPORT
PORTLAND, MAINE

DeLUCA-HOFFMAN ASSOCIATES, INC.
770 MAIN STREET, SUITE 5
BRUNSWICK/PORTLAND, ME 04103
(207) 729-4199
WWW.DELUCAHOFFMAN.COM

DRAWN:	HME	DATE:	NOV 2002
DESIGNED:	MJD	SCALE:	AS SHOWN
CHECKED:	MJD	JOB NO.	1916/01
FILE NAME:	1916ELECSFS-ABYELLOWBIRD		
SHEET	C-12		

\1916\dwg\1675-ABYELLOWBIRD.DWG, 05, 07/24/2003 01:50:56 PM, cadtechmaine

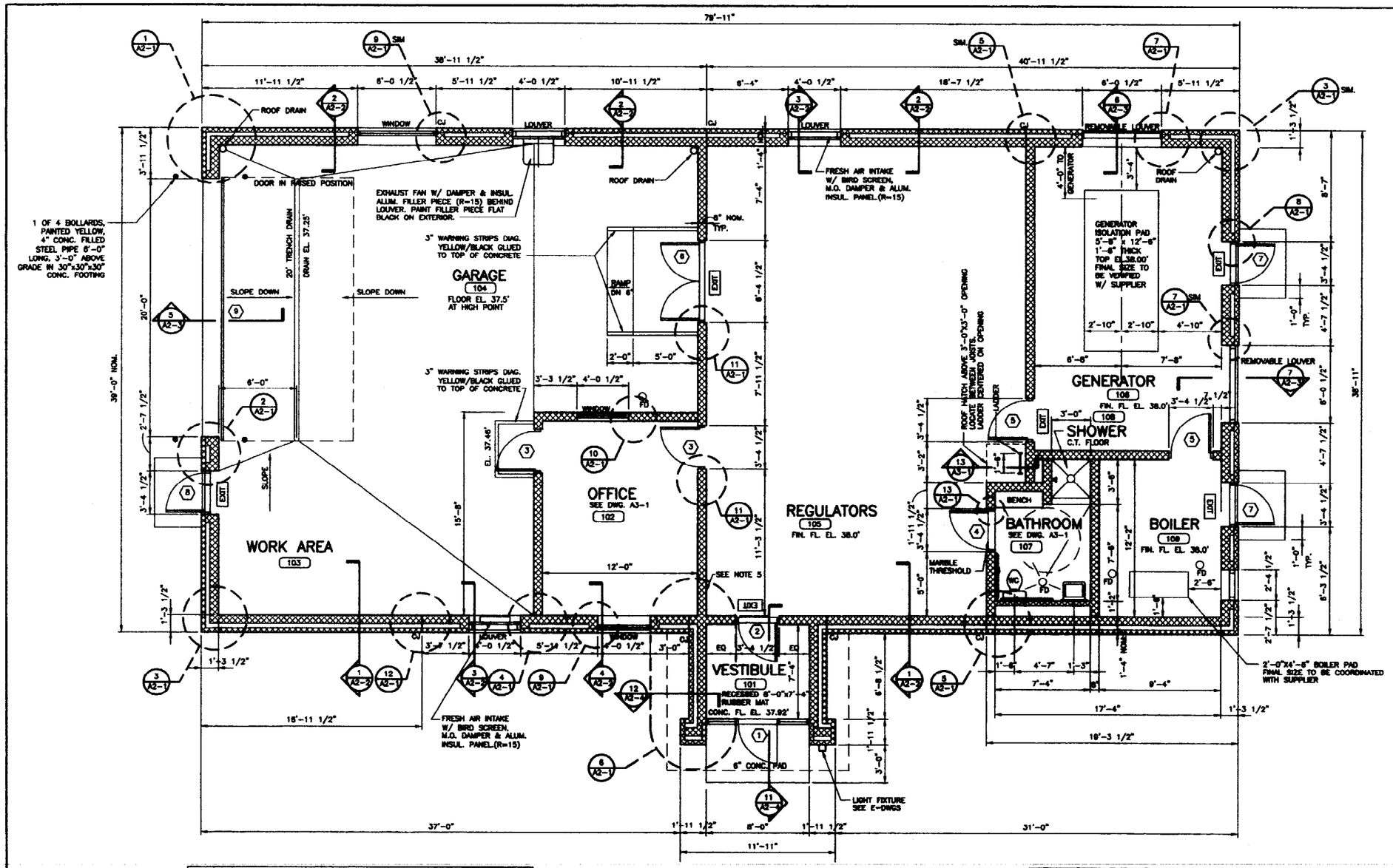

BUILDING CODE DATA

USE GROUP	S-2: LOW HAZARD STORAGE
TYPE OF CONSTRUCTION	NON-COMBUSTIBLE: GROUP S-2 ALLOWS CONSTRUCTION TYPE 2-C, UNPROTECTED UP TO 3 STORIES AND 14,400 S.F. BUILDING HAS 3026 S.F. GROSS AREA.
FIRE RESISTANCE OF:	
1. EXTERIOR WALLS	
LOADBEARING	0 HR PER TABLE 602
NONLOADBEARING	0 HR PER TABLE 602
2. FIRE WALLS AND PARTY WALLS	NA
3. FIRE SEPARATION ASSEMBLIES	
FIRE ENCLOSURE OF EXITS/STAIRS	NA
SHAFTS/ELEVATOR HOISTWAY	NA
MIXED USE AND FIRE AREA SEPARATION	NA
OTHER SEPARATION ASSEMBLIES	1 HR BOILER ROOM TABLE 302.1.1
4. FIRE PARTITION	
EXITWAYS ACCESS CORRIDORS	NA
TENANT SPACES SEPARATIONS	NA
5. DEWELING UNITS SEPARATIONS	NA
6. SMOKE BARRIERS	NA
7. OTHER NONLOADBEARING PARTITIONS	NA
8. INTERIOR COLUMNS, GIRDERS, ETC.	
SUPPORTING 2 OR MORE FLOORS	NA
SUPPORTING 1 FLOOR OR ROOF ONLY	NA
9. STRUCTURAL MEMBERS SUPPORTING WALL	NA
10. FLOOR CONSTRUCTION INCLUDING BEAMS	NA
11. ROOF CONSTRUCTION:	
15 FT. OR LESS IN HEIGHT	0 HR PER TABLE 602
15 FT. TO 20 FT. IN HEIGHT	0 HR PER TABLE 602
20 FT. OR MORE IN HEIGHT	0 HR PER TABLE 602

FLOOR PLAN

1/4" = 1'-0"

NOTES:

1. FOR EXTERIOR ENTRANCE PADS SEE STRUCTURAL DRAWINGS.
2. ALL DIMENSIONS FOR OPENINGS IN MASONRY ARE MASONRY OPENINGS (M.O.)
3. COORDINATE WITH ELECTRICAL DWGS. LOCATION OF PANELS AND RISERS.
4. COORDINATE WITH P-DWGS FOR FD LOCATIONS.
5. PROVIDE WALL MOUNTED MULTI PURPOSE DRY CHEMICAL PORTABLE FIRE EXTINGUISHER UL-RATED 4-A: 60-B: C, 10 LB. NOMINAL CAPACITY, IN ENAMEL-STEEL CONTAINER.
6. COORDINATE WORK WITH RADIANT SLAB HEATING SYSTEM.

BUILDING CODE DATA

ADDITIONAL REQUIREMENTS

1. OCCUPANCY:
   MAXIMUM 3F PER OCCUPANT; 300 SF PER OCCUPANT. CODE SECTION 1008.1.2
   BUILDING GROSS AREA IS 3026 SF, LESS THAN 3000 SF NET
   10 OCCUPANTS MAXIMUM
2. EXISTS REQUIRED: ONE
   EXITS PROVIDED: THREE
   MAXIMUM TRAVLE 100'
3. EGRESS WIDTH REQUIRED:
   CORRIDOR: 36" CODE SECTION 1011.3
   DOORS: 32" CODE SECTION 1014.8
4. PLUMBING FIXTURES REQUIRED:
   MALE: 1 PER 25 OCCUPANCY
   FEMALE: 1 PER 20 OCCUPANCY
   SINGLE TOILET ACCEPTABLE

DeLuco-Hoffman Associates, Inc.
Consulting Engineers
770 Main Street
South Portland, Maine 04106
207-775-1121

HNTB
HNTB CORPORATION
330 Passaic Avenue
Fairfield, New Jersey 07004
(973) 227-6460

LIN ASSOCIATES, INC.
CONSULTING ENGINEERS
BOSTON, MA (617)566-4215

KEY MAP

DATE	REVISION

PORTLAND INTERNATIONAL JETPORT
CITY OF PORTLAND
PORTLAND, MAINE

AIRFIELD LIGHTING VAULT

FLOOR PLAN

SCALE: 1/4"=1'-0"	DATE: 05/02/2003
FILE NO.: E3-01	HNTB JOB NO. 27360

STATE OF MAINE ROBERT A.T. LIE No. 9444 10/03

SHEET

A1-1

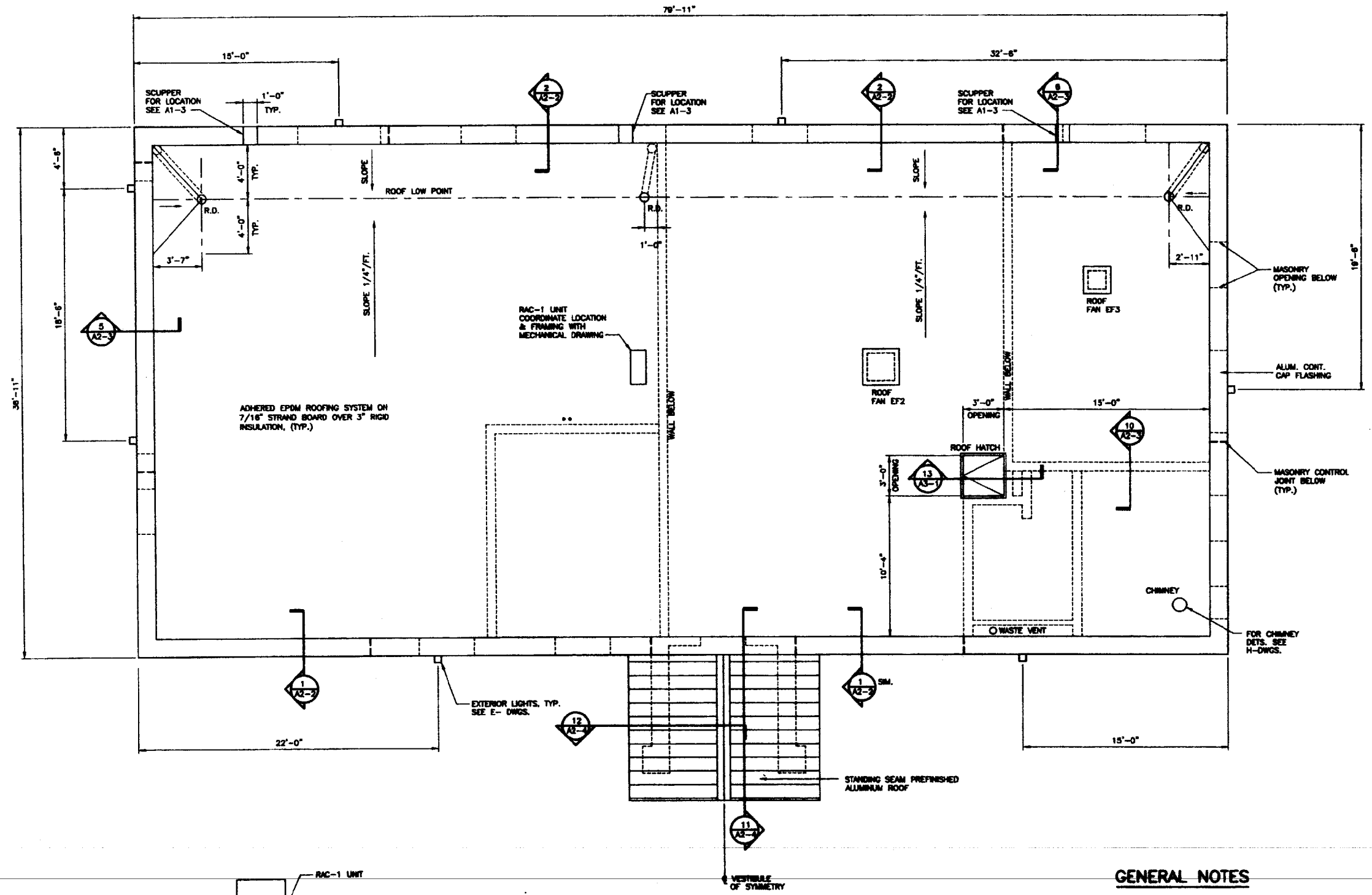

ROOF PLAN

1/4" = 1'-0"

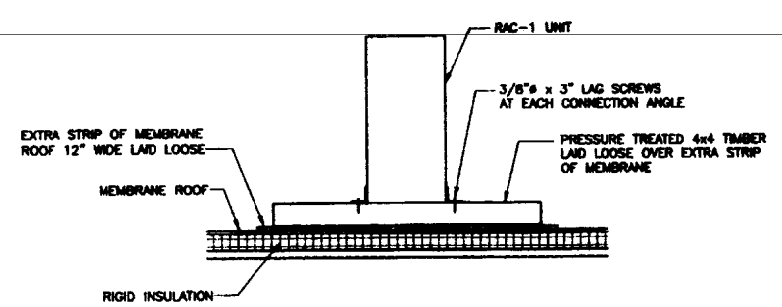

RAC-1 UNIT SUPPORT DETAIL

3/4" = 1'-0"

GENERAL NOTES

1. GENERAL NOTES ARE APPLICABLE UNLESS OTHERWISE SPECIFICALLY NOTED ON DRAWINGS OR IN SPECIFICATIONS.
2. REFER TO STRUCTURAL, MECHANICAL AND ELECTRICAL DRAWINGS FOR COORDINATION.
3. REFER TO MECHANICAL AND ELECTRICAL DRAWINGS FOR CONCRETE PAD REQUIREMENTS.
4. REFER TO CIVIL DRAWINGS AND SPECIFICATIONS FOR PERIMETER DRAINAGE, FINISH GRADE AND OTHER REQUIREMENTS.
5. EXPOSED UTILITIES MUST BE ORGANIZED, NEAT COORDINATED AND VISUAL APPEARANCE ACCEPTABLE AND PLEASING. PROVIDE COORDINATION DRAWINGS FOR DESIGNER REVIEW AND APPROVAL.
6. REFER TO PLUMBING DRAWINGS FOR LOCATION OF FLOOR DRAINS.
7. ALL SEALANT SHALL MATCH IN COLOR THE BASE MATERIAL.
8. ALL CONTROL JOINTS SHALL MATCH MORTAR COLOR.
9. PROVIDE BOND BEAMS AT MASONRY OPENINGS UP TO 8'-0" MAXIMUM WIDTH.
10. REFER TO STRUCTURAL DRAWINGS AND SPECIFICATIONS FOR ADDITIONAL MASONRY REINFORCEMENT REQUIREMENTS.

DeLuco-Hoffman Associates, Inc.
Consulting Engineers
778 Main Street
South Portland, Maine 04106
207-775-1121

HNTB
HNTB CORPORATION
330 Passaic Avenue
Fairfield, New Jersey 07004
(973) 227-8460

LIN ASSOCIATES, INC.
CONSULTING ENGINEERS
BOSTON, MA (617)566-4216

KEY MAP

DATE	REVISION

PORTLAND INTERNATIONAL JETPORT
CITY OF PORTLAND
PORTLAND, MAINE

AIRFIELD LIGHTING VAULT

ROOF PLAN

SCALE: 1/4"=1'-0"	DATE: 05/02/2003
FILE NO.: E3-01	HNTB JOB NO. 27360
	SHEET A1-2

STATE OF MAINE ROBERT B. LI LIC. No. 9484 PROFESSIONAL ENGINEER

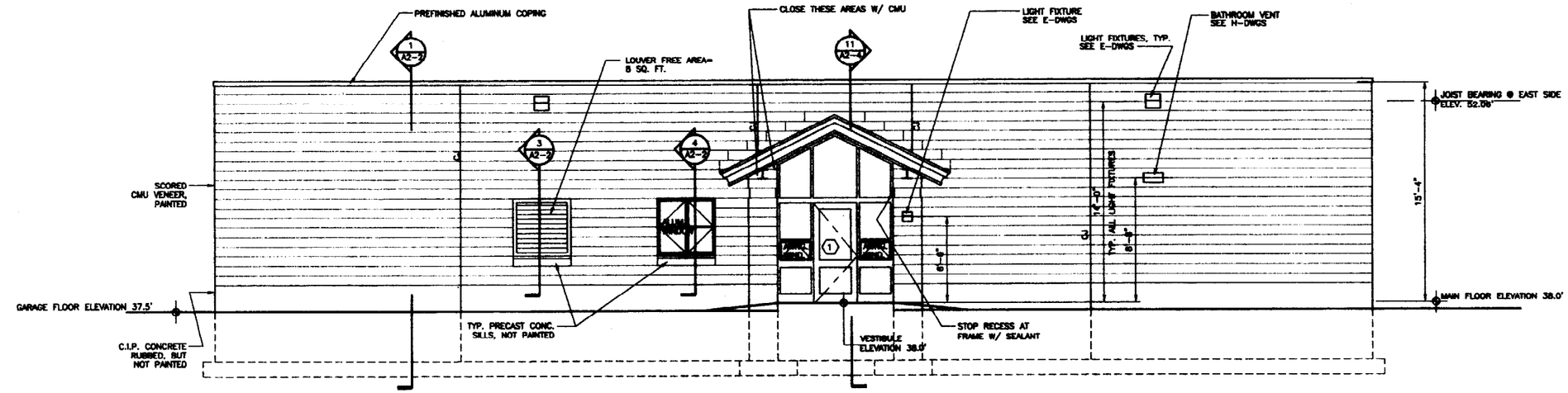

FRONT (EAST) ELEVATION

1/4" = 1'-0"

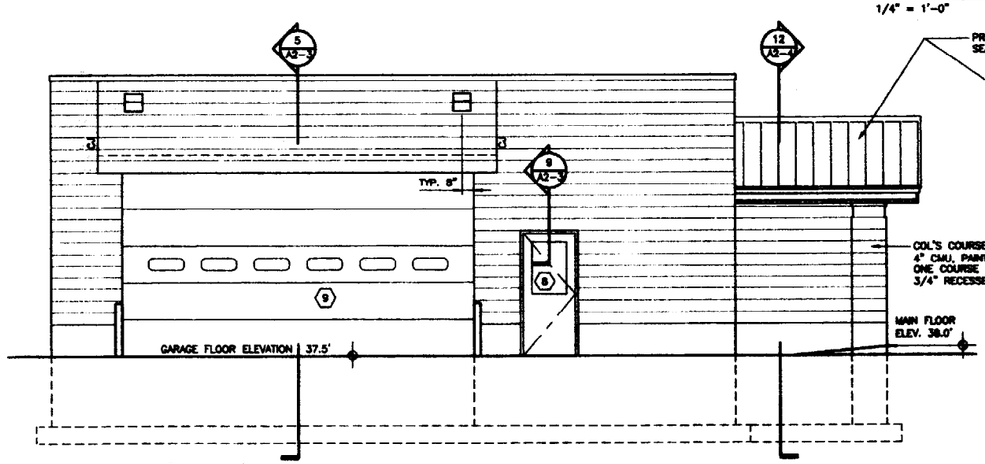

END (SOUTH) ELEVATION

1/4" = 1'-0" CMU COURSING SAME AS TYP.

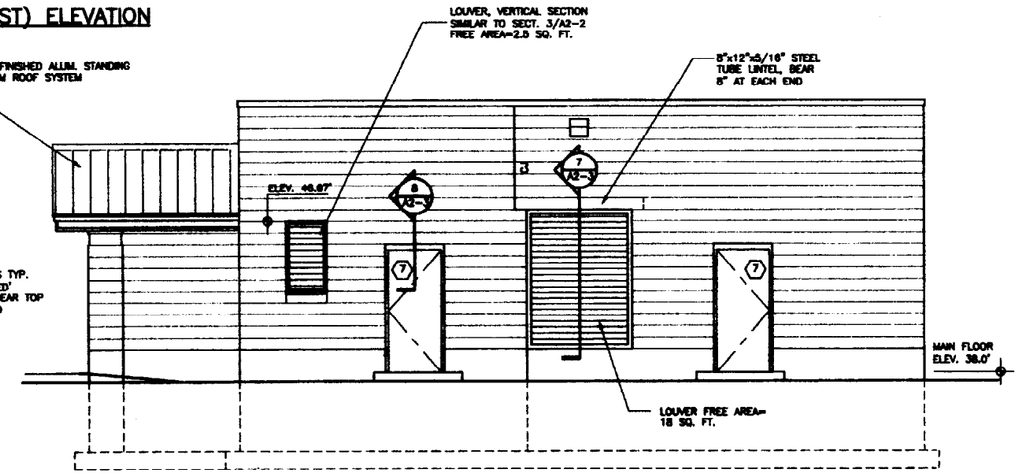

END (NORTH) ELEVATION

1/4" = 1'-0" CMU COURSING SAME AS TYPICAL

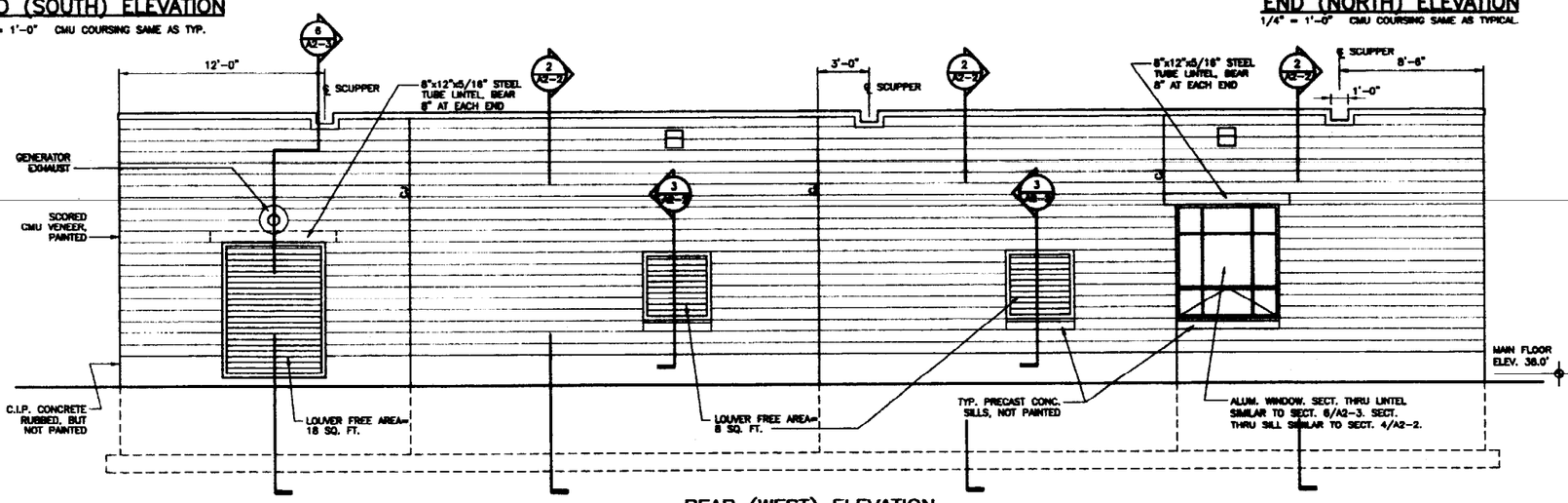

REAR (WEST) ELEVATION

1/4" = 1'-0" CMU COURSING SAME AS TYPICAL

NOTES:

LIGHT FIXTURES OVER OPENINGS SHALL BE CENTERED OVER THOSE OPENINGS.

TOP OF GRADE AROUND BUILDING SHALL BE EL. 37.5', FOR GRADE AT ENTRANCE SEE SECT. 11/A2-4

TOP OF C.I.P. CONC. CURB AROUND BUILDING EL. 39.33' (TYP.)

FOR VERT. MASONRY OPENINGS SEE A3-1.

DeLuce-Hoffman Associates, Inc.
Consulting Engineers
770 Main Street
South Portland, Maine 04106
207-775-1121

HNTB
HNTB CORPORATION
330 Passaic Avenue
Fairfield, New Jersey 07004
(973) 227-6460

LIN ASSOCIATES, INC.
CONSULTING ENGINEERS
BOSTON, MA (617)988-4216

KEY MAP

DATE	REVISION

PORTLAND INTERNATIONAL JETPORT
CITY OF PORTLAND
PORTLAND, MAINE

AIRFIELD LIGHTING VAULT

ELEVATIONS

SCALE: 1/4"=1'-0"	DATE: 05/02/2003
FILE NO.: E3-01	HNTB JOB NO. 27360

STATE OF MAINE REGISTERED PROFESSIONAL ENGINEER No. 9444

SHEET

A1-3

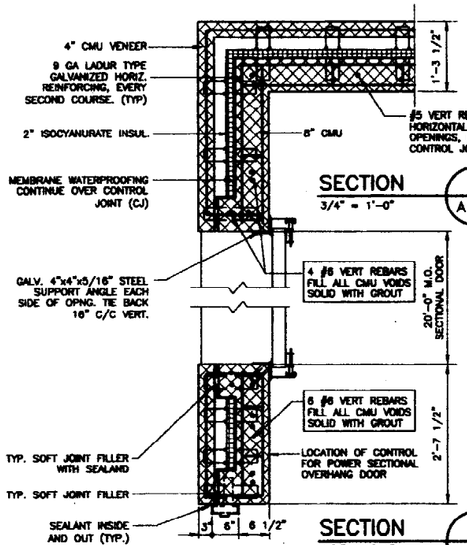

SECTION 1 / A1-1
3/4" = 1'-0"

SECTION 2 / A1-1
3/4" = 1'-0"

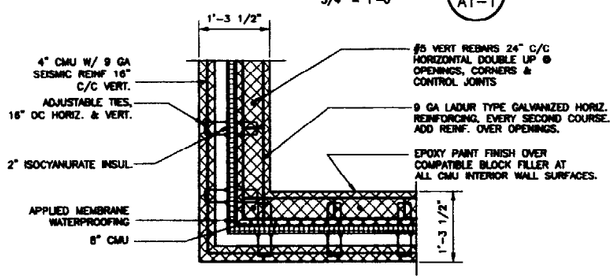

SECTION 3 / A1-1
3/4" = 1'-0"

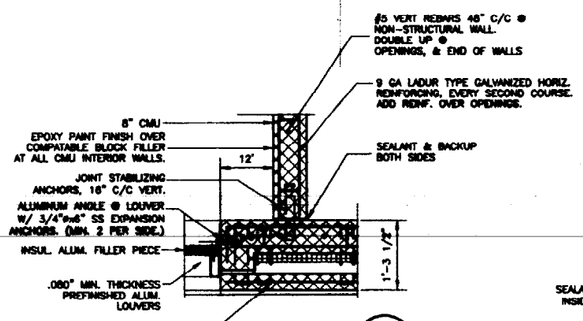

SECTION 4 / A1-1
3/4" = 1'-0"

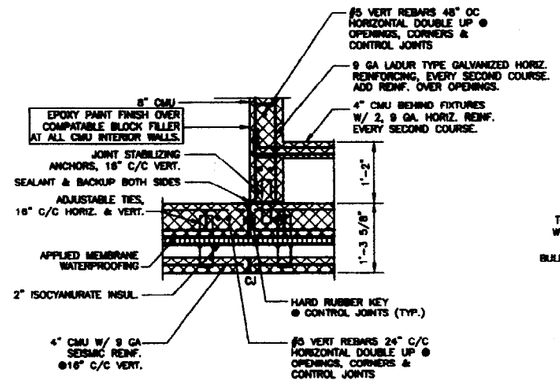

SECTION 5 / A1-1
3/4" = 1'-0"

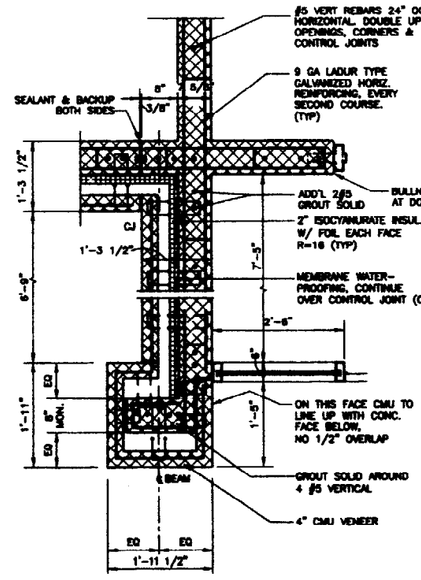

SECTION 6 / A1-1
3/4" = 1'-0"

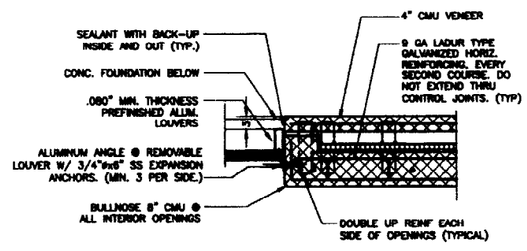

DETAIL 7 / A1-1
3/4" = 1'-0"

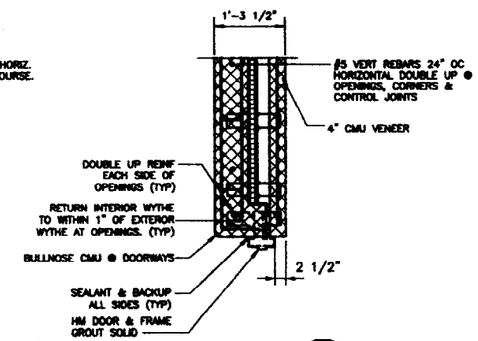

DETAIL 8 / A1-1
3/4" = 1'-0"

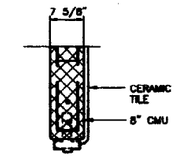

NOTE:
1. FOR ADDITIONAL INFORMATION SEE SECT 11 THIS SHEET.

DETAIL 13 / A1-1
3/4" = 1'-0"

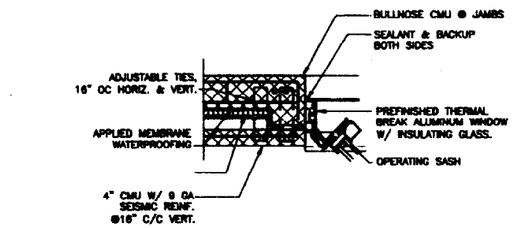

DETAIL 9 / A1-1
3/4" = 1'-0"

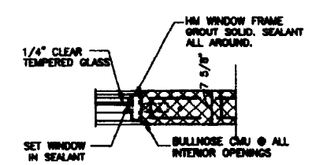

DETAIL 10 / A1-1
3/4" = 1'-0"

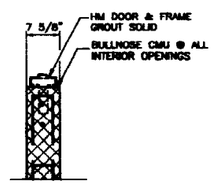

SECTION 11 / A1-1
3/4" = 1'-0"

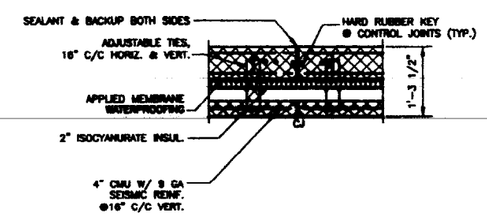

DETAIL 12 / A1-1
3/4" = 1'-0"

DeLuca-Hoffman Associates, Inc.
Consulting Engineers
778 Main Street
South Portland, Maine 04106
207-775-1121

HNTB
HNTB CORPORATION
330 Passaic Avenue
Fairfield, New Jersey 07004
(973) 227-8460

LIN ASSOCIATES, INC.
CONSULTING ENGINEERS
BOSTON, MA (617)566-4216

KEY MAP

DATE	REVISION

PORTLAND INTERNATIONAL JETPORT
CITY OF PORTLAND
PORTLAND, MAINE

AIRFIELD LIGHTING VAULT

HORIZONTAL SECTIONS

SCALE: 3/4" = 1'-0"	DATE: 05/02/2003
FILE NO.: E3-01	HNTB JOB NO. 27360

STATE OF MAINE ROBERT B.T. LEE No. 9444 REGISTERED PROFESSIONAL ENGINEER

SHEET
A2-1

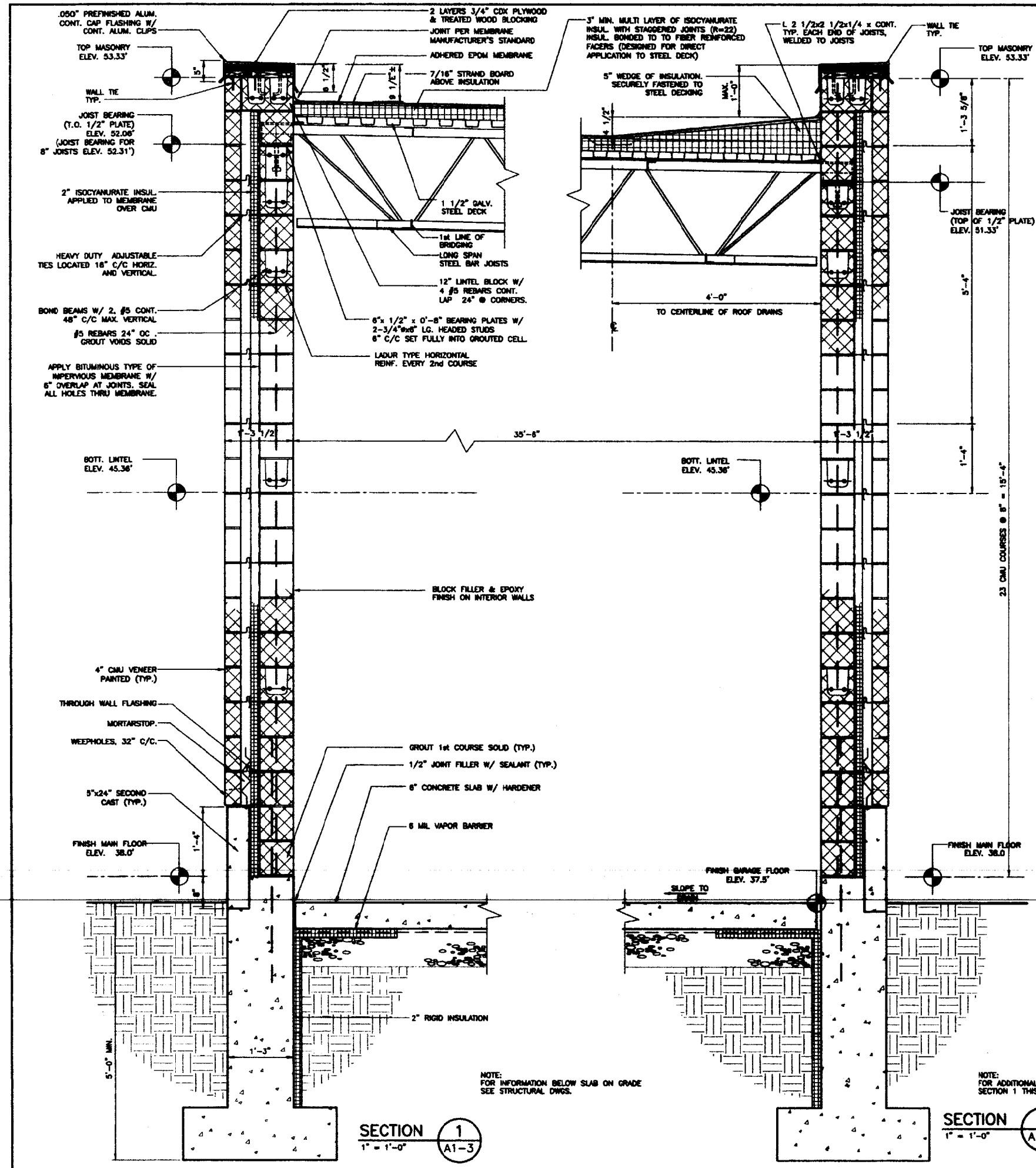

DeLuco-Hoffman Associates, Inc.
Consulting Engineers
770 Main Street
South Portland, Maine 04106
207-775-1121

HNTB
HNTB CORPORATION
330 Passaic Avenue
Fairfield, New Jersey 07004
(973) 227-5480

LIN ASSOCIATES, INC.
CONSULTING ENGINEERS
BOSTON, MA (617)866-4216

KEY MAP

DATE	REVISION

PORTLAND INTERNATIONAL JETPORT
CITY OF PORTLAND
PORTLAND, MAINE

AIRFIELD LIGHTING VAULT

VERTICAL SECTIONS

SCALE: 1"=1'-0"	DATE: 05/02/2003
FILE NO.: E3-01	HNTB JOB NO. 27360

STATE OF MAINE ROBERT S. LIE No. 9444 REGISTERED PROFESSIONAL ENGINEER

SHEET

A2-2

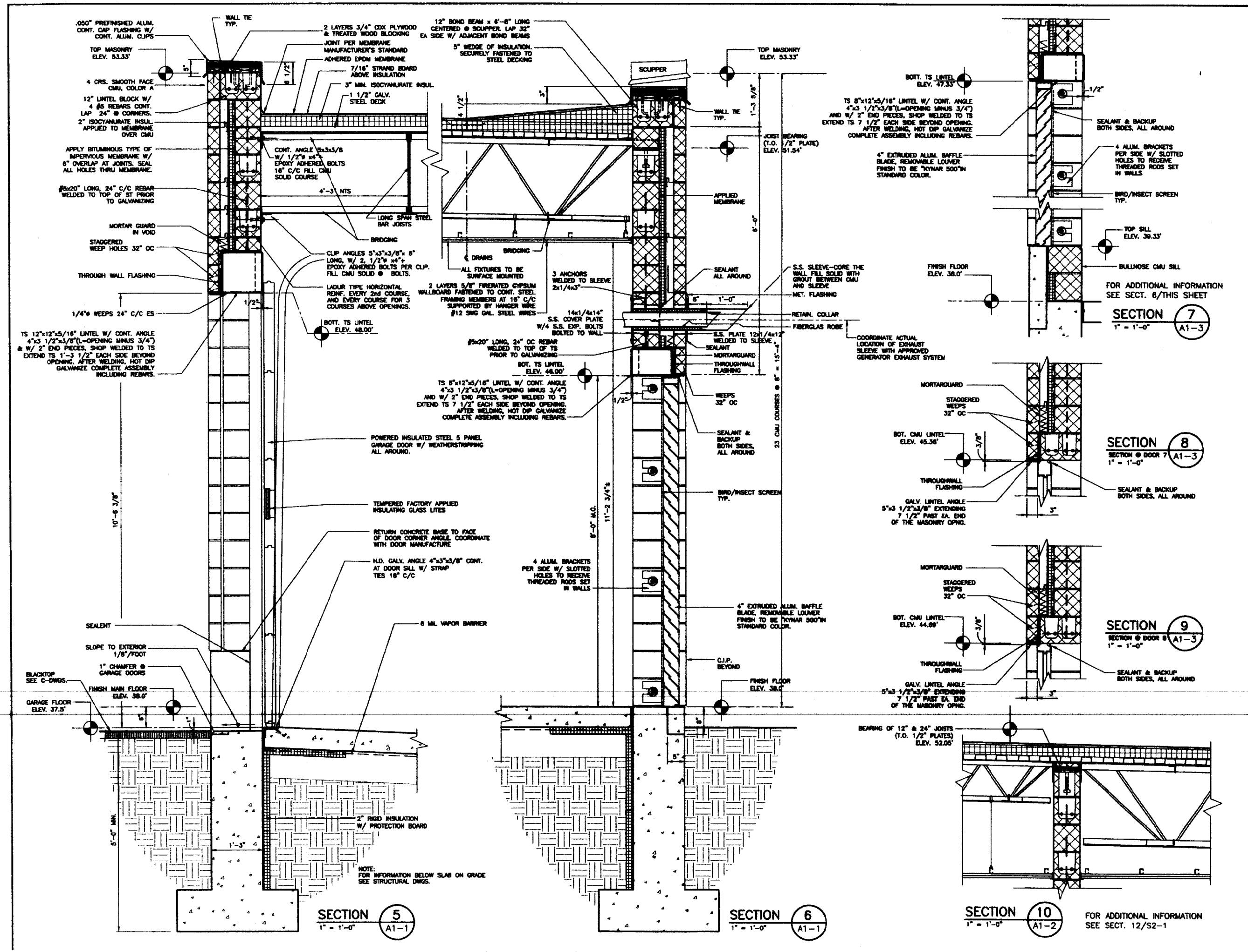

DeLuca-Hoffman Associates, Inc.
Consulting Engineers
778 Main Street
South Portland, Maine 04106
207-775-1121

HNTB
HNTB CORPORATION
330 Passaic Avenue
Fairfield, New Jersey 07004
(973) 227-6460

LIN ASSOCIATES, INC.
CONSULTING ENGINEERS
BOSTON, MA (617)969-4216

KEY MAP

DATE	REVISION

PORTLAND INTERNATIONAL JETPORT
CITY OF PORTLAND
PORTLAND, MAINE

AIRFIELD LIGHTING VAULT

VERTICAL SECTIONS

SCALE: 1"=1'-0"	DATE: 05/02/2003
FILE NO.: E3-01	HNTB JOB NO. 27360

STATE OF MAINE ROBERT S.T. LEE No. 9494 PROFESSIONAL ENGINEER

SHEET A2-3

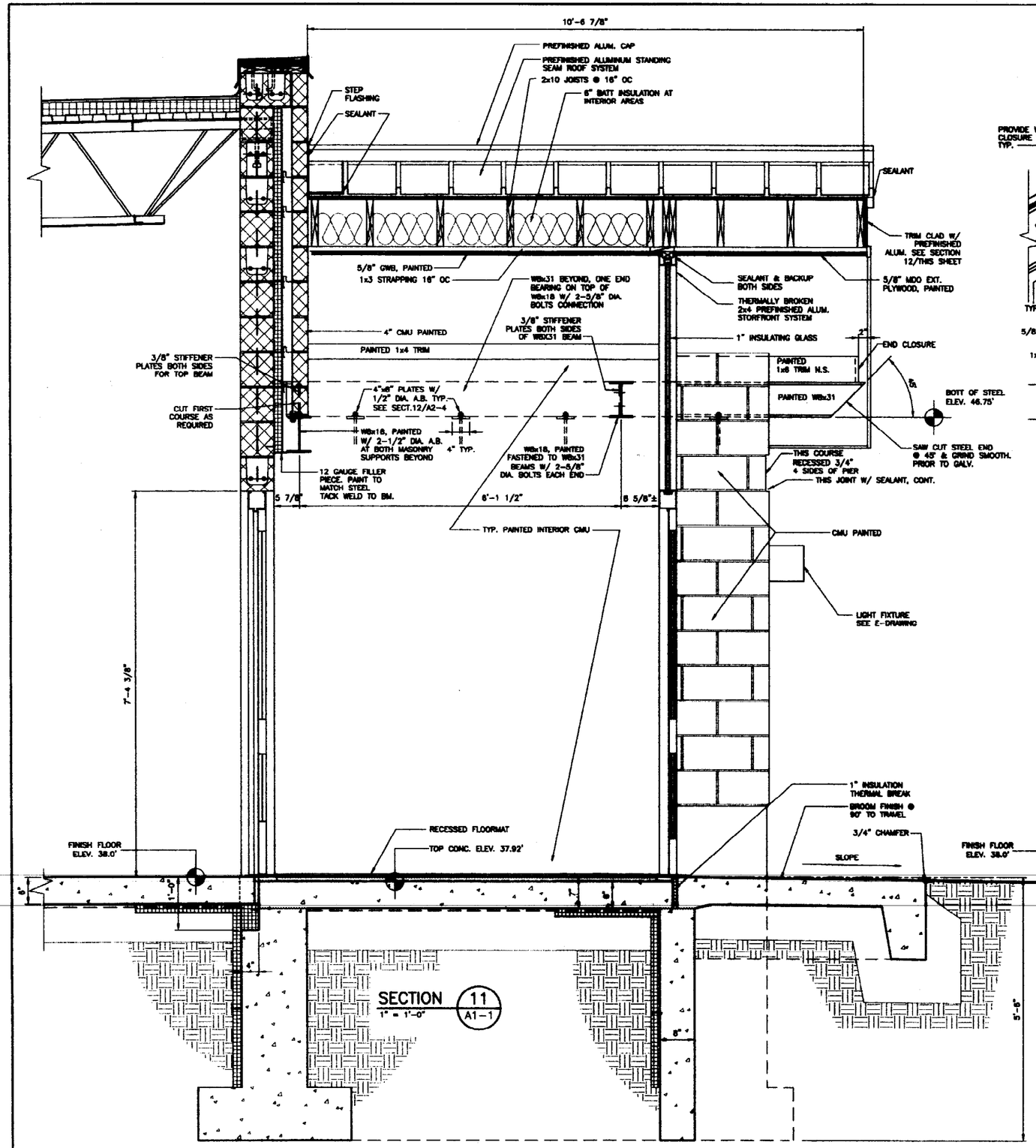

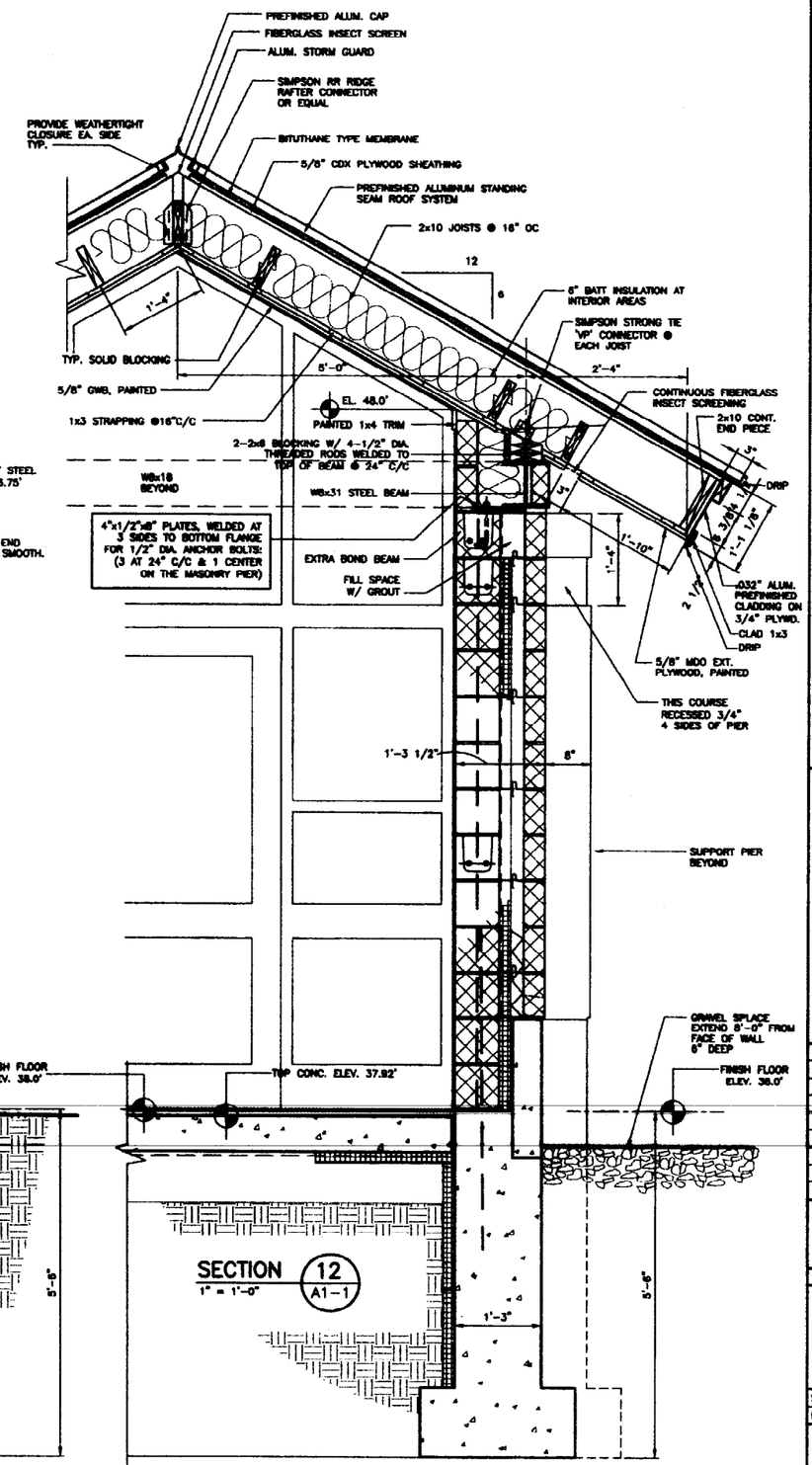

NOTES:
1. FOR INFORMATION BELOW SLAB ON GRADE SEE STRUCTURAL DWGS.
2. COORDINATE SLAB WORK WITH RADIANT SLAB HEATING SYSTEM.

DeLuce-Hoffman Associates, Inc.
Consulting Engineers
770 Main Street
South Portland, Maine 04106
207-775-1121

HNTB
HNTB CORPORATION
330 Passaic Avenue
Fairfield, New Jersey 07004
(973) 227-8460

LIN ASSOCIATES, INC.
CONSULTING ENGINEERS
BOSTON, MA (617)566-4216

KEY MAP

DATE	REVISION

PORTLAND INTERNATIONAL JETPORT
CITY OF PORTLAND
PORTLAND, MAINE

AIRFIELD LIGHTING VAULT

VERTICAL SECTIONS

SCALE: 1"=1'-0"	DATE: 05/02/2003
FILE NO.: E3-01	HNTB JOB NO. 27360

STATE OF MAINE ROBERT B.T. LEE No. 9414 PROFESSIONAL ENGINEER

SHEET

A2-4

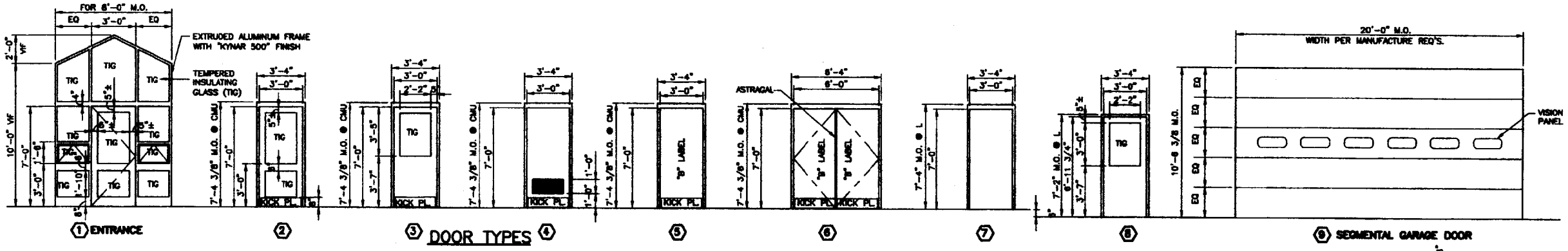

NOTE:
ALL DOORS AND FRAMES TO BE GALVANIZED PRIOR TO SHOP PAINTING. SHOP PAINT SHALL BE COMPATIBLE WITH ALL CONTIGUOUS SHOP AND FIELD APPLIED MATERIALS.

ROOM FINISH SCHEDULE

ROOM	ROOM #	FLOOR	CEILINGS, ETC.	WALLS	REMARKS
VESTIBULE	101	RUBBER MAT	PTD. GWB	CMU / PAINTED	EXTERIOR GYP. SHEATHING BOARD @ CLG.
OFFICE	102	MONOLITHIC CONC.	A.T.	CMU / PAINTED	–
WORK AREA	103	MONOLITHIC CONC.	–	CMU / PAINTED	–
GARAGE	104	MONOLITHIC CONC.	–	CMU / PAINTED	–
REGULATORS	105	MONOLITHIC CONC.	–	CMU / PAINTED	–
GENERATOR	106	MONOLITHIC CONC.	PTD. GWB	CMU / PAINTED	2 LAYERS FIRERATED GYP. BOARD @ CLG.
BATHROOM	107	CERAMIC TILE	PTD. MRGWB	CERAMIC TILE	EXTERIOR GYP. SHEATHING BOARD @ CLG.
SHOWER	108	CERAMIC TILE	PTD. MRGWB	CERAMIC TILE	EXTERIOR GYP. SHEATHING BOARD @ CLG.
BOILER	109	MONOLITHIC CONC.	PTD. GWB	CMU / PAINTED	2 LAYERS FIRERATED GYP. BOARD @ CLG.

DOOR SCHEDULE

DOOR #	SIZE	MATERIAL	FINISH	FRAME	CLOSER	THRESHOLD	KICKPLATE	HW SET	REMARKS
1	3'-0" x 7'-0"	ALUM.	FACTORY COATED	FACTORY COATED	YES	ALUMINUM	–	HW-1	1. TEMPERED INSULATED GLASS (TIG). 2. ELECTRIC STRIKE 24V DC.
2	3'-0" x 7'-0"	HOLLOW METAL	PAINTED	METAL PAINTED	YES	ALUMINUM	BOTH SIDES	HW-2	TEMPERED INSUL. GLASS (TIG)
3 x2	3'-0" x 7'-0"	HOLLOW METAL	PAINTED	METAL PAINTED	YES	–	BOTH SIDES	HW-3	TEMPERED GLASS (TG)
4	3'-0" x 7'-0"	HOLLOW METAL	PAINTED	METAL PAINTED	YES	MARBLE	BOTH SIDES	HW-4	
5 x2	3'-0" x 7'-0"	HOLLOW METAL	PAINTED	METAL PAINTED	YES	ALUMINUM	BOTH SIDES	HW-5	1 1/2 HRS RATED "B" LABEL
6	6'-0" x 7'-0"	HOLLOW METAL	PAINTED	METAL PAINTED	YES	ALUMINUM	BOTH SIDES	HW-6	PROVIDE ASTRAGAL 1 1/2 HR. "B" LABEL
7 x2	3'-0" x 7'-0"	HOLLOW METAL	PAINTED	METAL PAINTED	YES	ALUMINUM	INTERIOR	HW-2	
8	3'-0" x 7'-0"	HOLLOW METAL	PAINTED	METAL PAINTED	YES	ALUMINUM	INTERIOR	HW-2	1. TEMPERED INSUL. GLASS (TIG) 2. ELECTRIC STRIKE 24V DC.
9	20'-0"M.O.x10'-6 3/8"M.O.	HOLLOW METAL	PAINTED	METAL PAINTED	–	–	–	–	SEGMENTAL INSULATED GARAGE DOOR

HARDWARE SCHEDULE

HW SET	ITEM	QUANTITY	MFG.	TYPE	FINISH	REMARKS
HW-1	HINGES LATCHSET DEADBOLT CLOSER STOP WEATHERSTRIP DOOR SWEEP THRESHOLD DRIP SENSOR	1 1/2 PAIR 1 1 1 1 1 1 1 1	– – – – – – – – –	– – – – – – – – –	– – – – – – – ALUM. –	CYLINDER TO AIRPORT STD.
HW-2	HINGES LATCHSET DEADBOLT CLOSER STOP WEATHERSTRIP DOOR SWEEP THRESHOLD	1 1/2 PAIR 1 1 1 1 1 SET 1 1	STANLEY SCHLAGE SCHLAGE STANLEY STANLEY PEMKO PEMKO PEMKO	FBB191 ND10LNX T2N C2 CRS S88PLUS 345CSM 2005SDWU	US26D US26D US26D US26D US26D US26D US26D US26D	ALL HINGES B.S. CYLINDER TO AIRPORT STD. MEET ANSI-A117.1
HW-3	HINGES LATCHSET DEADBOLT CLOSER STOP KICKPLATES	1 1/2 PAIR 1 1 1 1 2	STANLEY SCHLAGE SCHLAGE STANLEY STANLEY IVES	FBB191 ND10LNX T2N C2 CRS 8400	US26D US26D US26D US26D US26D US26D	ALL HINGES B.S. CYLINDER TO AIRPORT STD. MEET ANSI-A117.1
HW-4	HINGES LATCHSET DEADBOLT CLOSER STOP KICKPLATES THRESHOLD	1 1/2 PAIR 1 1 1 1 2 1	STANLEY SCHLAGE SCHLAGE STANLEY STANLEY IVES –	FBB191 ND10LNX T2N C2 CRS 8400 –	US26D US26D US26D US26D US26D US26D –	ALL HINGES B.S. CYLINDER TO AIRPORT STD. MEET ANSI-A117.1 6" HIGH 1/2" THICK MARBLE
HW-5	HINGES LATCHSET DEADBOLT CLOSER STOP WEATHERSTRIP DOOR SWEEP THRESHOLD	1 1/2 PAIR 1 1 1 1 1 SET 1 1	STANLEY SCHLAGE SCHLAGE STANLEY STANLEY PEMKO PEMKO PEMKO	FBB191 ND10LNX T2N C2 CRS S88PLUS 345CSM 2005SDWU	US26D US26D US26D US26D US26D US26D US26D ALUM.	ALL HINGES B.S. MEET ANSI-A117.1 6" HIGH CYLINDER TO AIRPORT STD.
HW-6	HINGES LATCHSET DEADBOLT CLOSER STOP KICKPLATES THRESHOLD ASTRAGAL	3 PAIR 1 1 2 2 2 1 1	STANLEY SCHLAGE SCHLAGE STANLEY STANLEY IVES PEMKO PEMKO	FBB191 ND10LNX T2N C2 CRS 8400 2005SDWU –	US26D US26D US26D US26D US26D US26D ALUM. –	ALL HINGES B.S. MEET ANSI-A117.1 6" HIGH

NOTES:

1. SEE SPECIFICATION SECTION 08711 FOR BUILDER'S HARDWARE INFORMATION.
2. ALL DOORS SHALL HAVE DOOR STOPS.
3. ALL KEYED LOCKSETS TO HAVE CYLINDERS COMPATIBLE WITH MEDICO PORTLAND JETPORT KEYING SYSTEM.

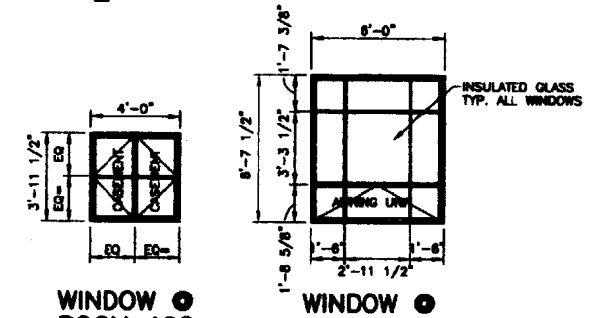

WINDOWS TYPES

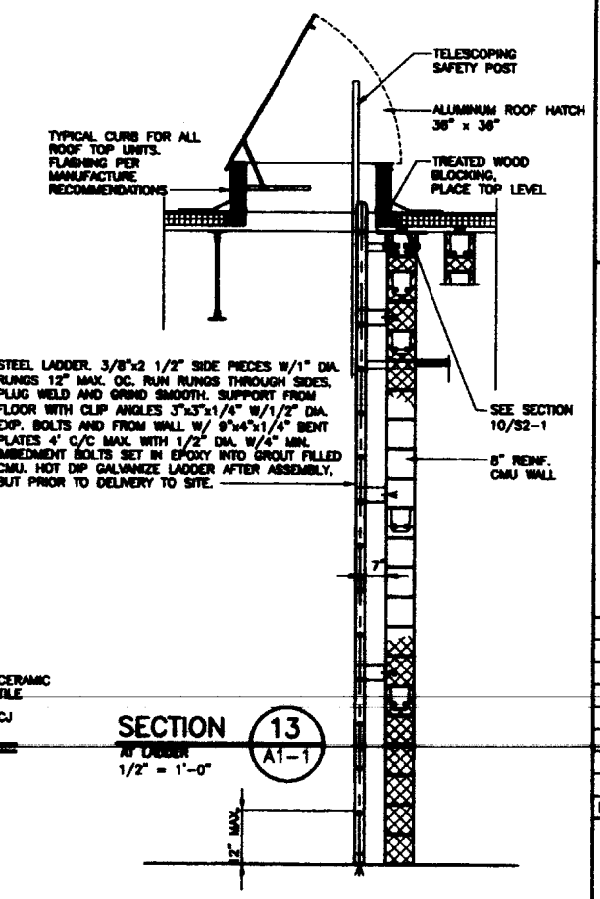

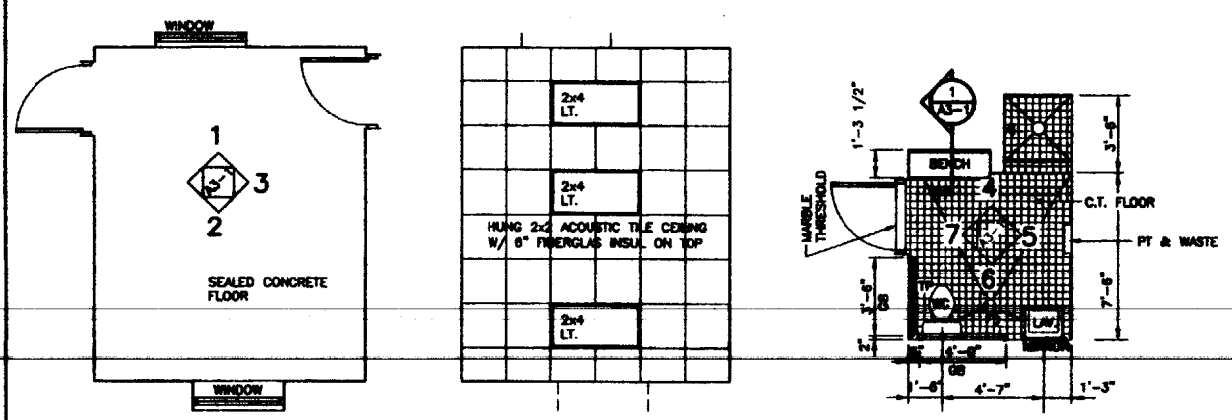

PLAN 1/4" = 1'-0"
REFLECTED CEILING PLAN 1/4" = 1'-0"
OFFICE 102

PLAN 1/4" = 1'-0"
BATHROOM 107 108

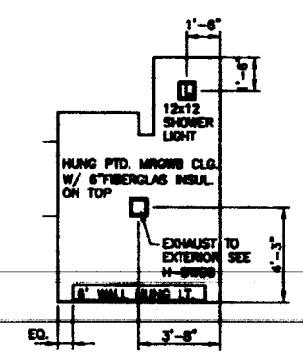

REFLECTED CEILING PLAN 1/4" = 1'-0"

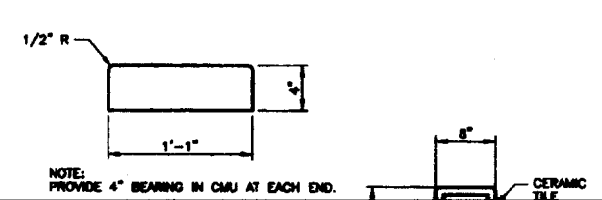

SECTION 1 A3-1 1 1/2" = 1'-0"

CURB 1" = 1'-0"

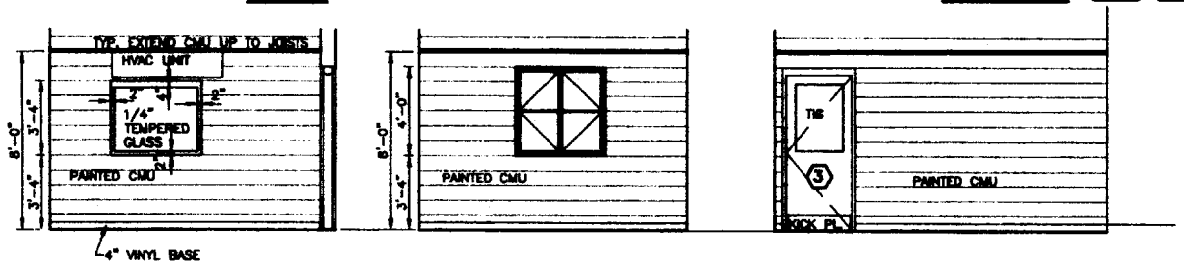

ELEVATION 1
ELEVATION 2
OFFICE 102 1/4" = 1'-0"
ELEVATION 3

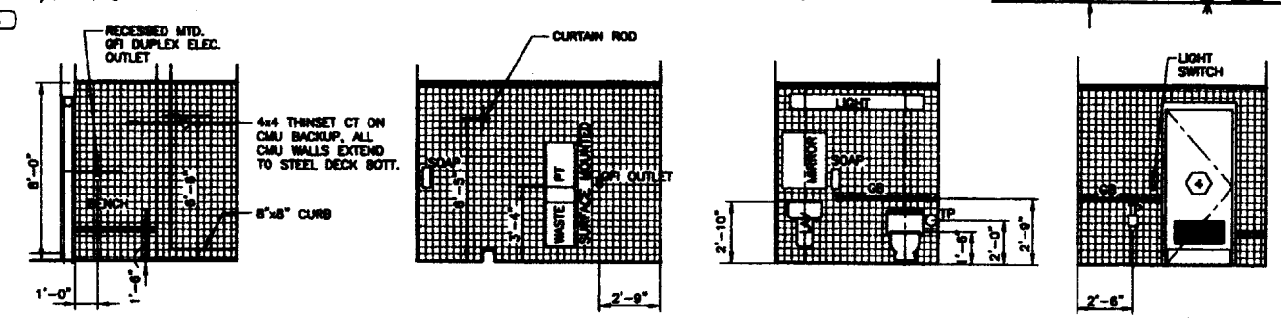

ELEVATION 4
ELEVATION 5
ELEVATION 6
ELEVATION 7
BATHROOM 107 & SHOWER 108 1/4" = 1'-0"

DeLuca-Hoffman Associates, Inc.
Consulting Engineers
778 Main Street
South Portland, Maine 04106
207-775-1121

HNTB
HNTB CORPORATION
330 Passaic Avenue
Fairfield, New Jersey 07004
(973) 227-6460

LIN ASSOCIATES, INC.
CONSULTING ENGINEERS
BOSTON, MA (617)566-4216

KEY MAP

DATE	REVISION

PORTLAND INTERNATIONAL JETPORT
CITY OF PORTLAND
PORTLAND, MAINE

AIRFIELD LIGHTING VAULT

SCHEDULES INTERIOR ELEVATIONS MISCELLANEOUS DETAILS

SCALE: AS NOTED	DATE: 05/02/2003
FILE NO.: A3-01	HNTB JOB NO. 27360

STATE OF MAINE ROBERT B.T. LIE No. 9444 PROFESSIONAL ENGINEER

SHEET A3-1

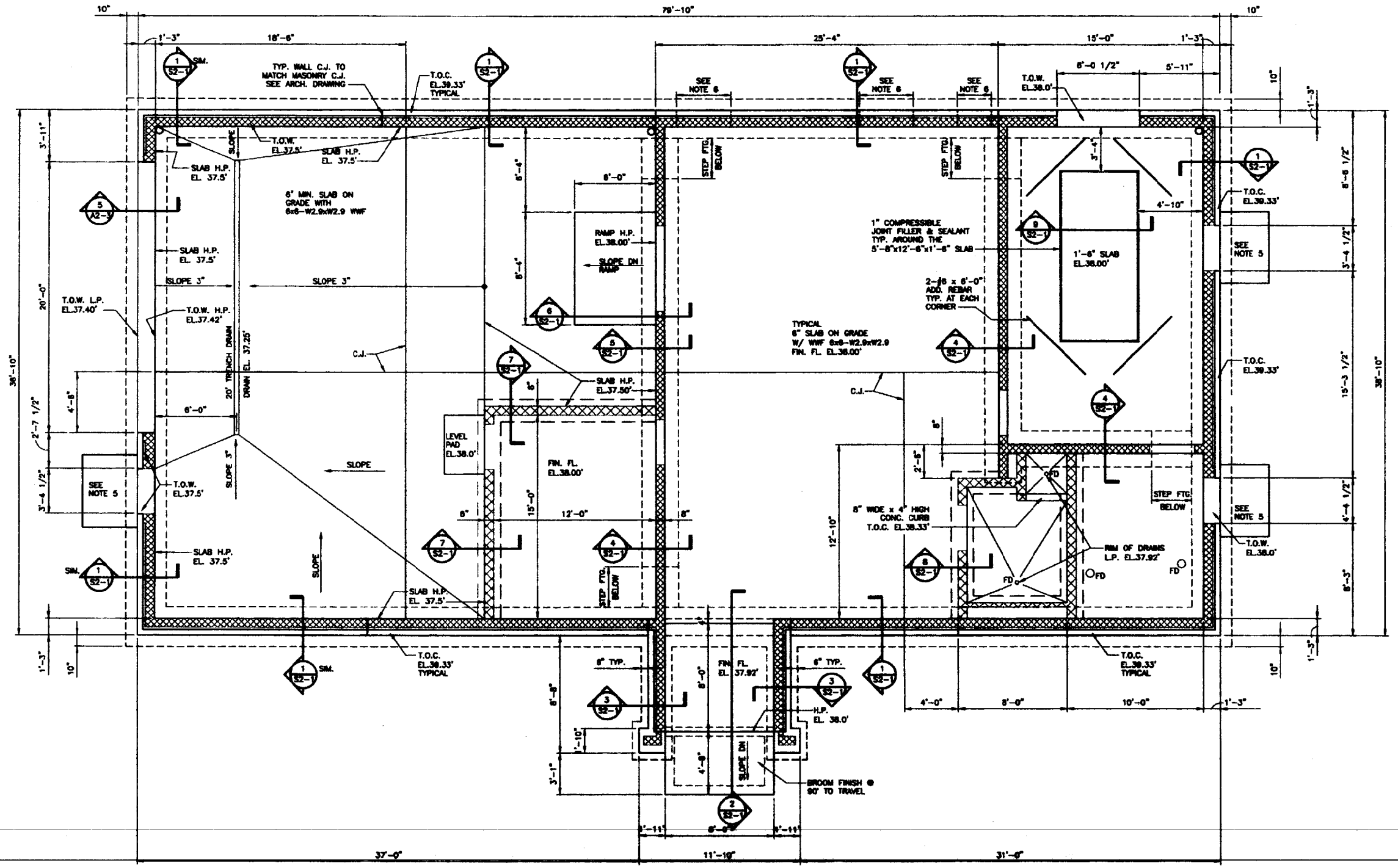

FLOOR PLAN

1/4" = 1'-0"

NOTES:

1. FOUNDATION BEARING CAPACITY = 2 KSF.
2. INDICATES INTERIOR MASONRY WALL W/ #5 @ 48" O.C. GROUT VOID SOLID.
3. INDICATES MASONRY SHEAR WALL W/ #5 @ 24" O.C. GROUT VOID SOLID.
4. ASTERISK (*) DIMENSIONS TO BE VERIFIED BY EQUIPMENT MANUFACTURER.
5. PROVIDE ENTRANCE PAD PER TYPICAL DETAIL ON SHEET S2-2.
6. DUCT BANK PENETRATION AT FOUNDATION WALL. MAXIMUM DIMENSION 14"H X 48"W. COORDINATE WITH ELECTRICAL FOR LOCATION AND SEE SECTION 1 ON S2-1 FOR DETAIL.
7. COORDINATE WITH H-DRAWINGS FOR AREAS TO RECEIVE RADIANT SLAB HEATING SYSTEM.

DeLuco-Hoffman Associates, Inc.
Consulting Engineers
770 Main Street
South Portland, Maine 04106
207-775-1121

HNTB
HNTB CORPORATION
330 Passaic Avenue
Fairfield, New Jersey 07004
(973) 227-6460

LIN ASSOCIATES, INC.
CONSULTING ENGINEERS
BOSTON, MA (617)566-4216

KEY MAP

DATE	REVISION

PORTLAND INTERNATIONAL JETPORT
CITY OF PORTLAND
PORTLAND, MAINE

AIRFIELD LIGHTING VAULT

FOUNDATION & FLOOR PLAN

SCALE: 1/4"=1'-0"	DATE: 05/02/2003
FILE NO.: E3-01	HNTB JOB NO. 27360

STATE OF MAINE ROBERT E. LEE No. 9445 REGISTERED PROFESSIONAL ENGINEER

SHEET

S1-1

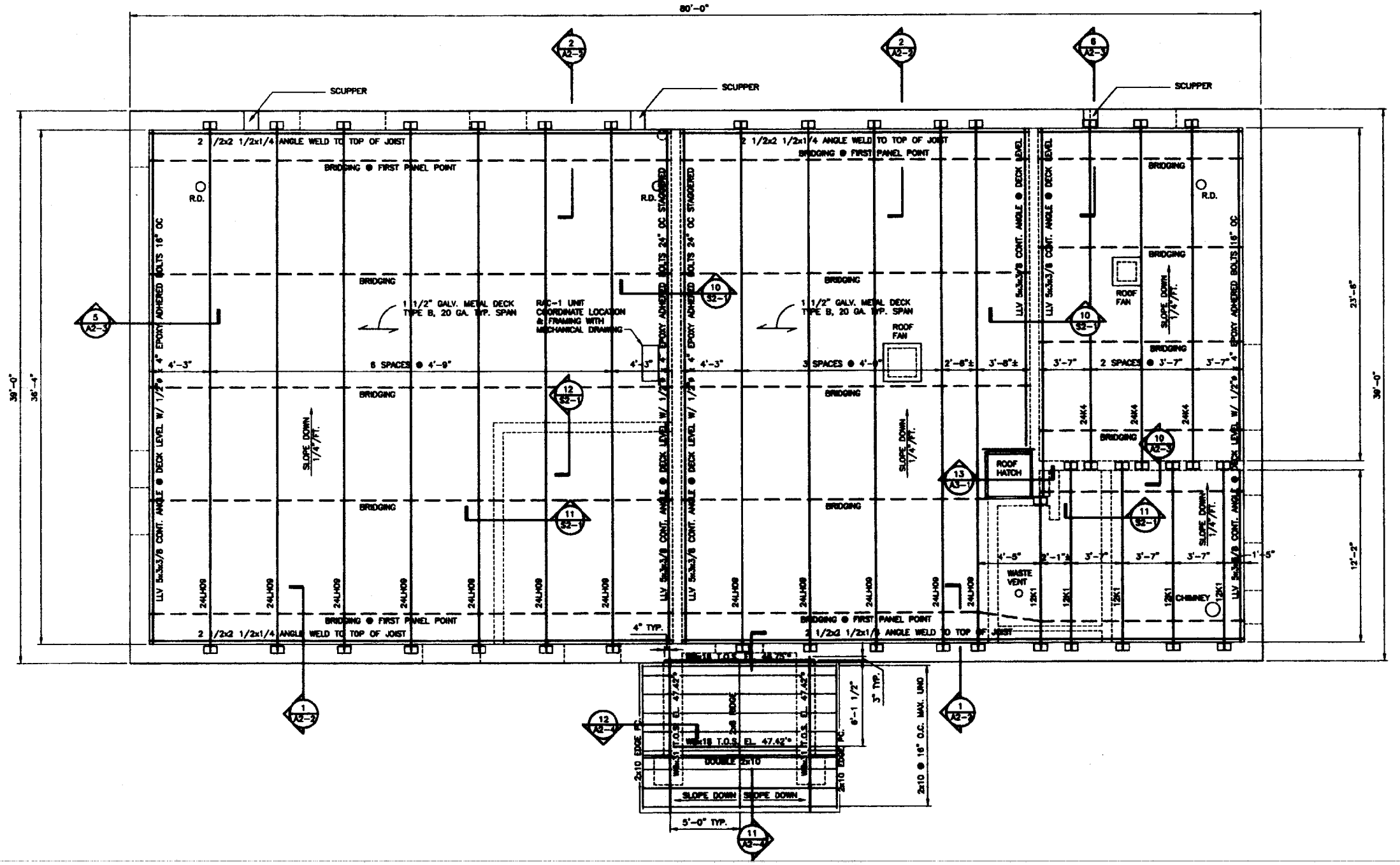

ROOF PLAN
1/4" = 1'-0"

NOTES:
1. PROVIDE HORIZONTAL BRIDGING TOP & BOTTOM.
2. BRIDGING TO BE LOCATED TO CLEAR ROOF HATCH & ROOF VENT OPENING AREA.
3. (*) ASTERISKS INDICATES ELEVATION TO BE VERIFIED WITH ARCHITECTURAL DRAWINGS.
4. FOR TYPICAL ROOF DECK OPENING DETAIL SEE SHEET S2-2.
5. FOR STEEL LINTEL SIZE AND LOCATION SEE ARCHITECTURAL DRAWINGS.

DeLuco-Hoffman Associates, Inc.
Consulting Engineers
770 Main Street
South Portland, Maine 04106
207-775-1121

HNTB
HNTB CORPORATION
330 Passaic Avenue
Fairfield, New Jersey 07004
(973) 227-8460

LIN ASSOCIATES, INC.
CONSULTING ENGINEERS
BOSTON, MA (617)566-4216

KEY MAP

DATE	REVISION

PORTLAND INTERNATIONAL JETPORT
CITY OF PORTLAND
PORTLAND, MAINE

AIRFIELD LIGHTING VAULT

ROOF FRAMING PLAN

SCALE: 1/4"=1'-0"	DATE: 05/02/2003
FILE NO.: E3-01	HNTB JOB NO. 27360

STATE OF MAINE ROBERT B.T. LIN No. 9444 PROFESSIONAL ENGINEER 6/1/07

SHEET

S1-2

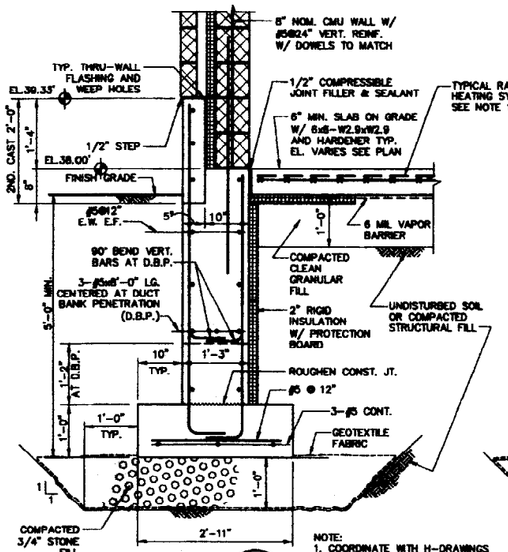

NOTE:
1. COORDINATE WITH H-DRAWINGS FOR AREAS TO RECEIVE RADIANT SLAB HEATING SYSTEM.

SECTION 1 / S1-1
3/4" = 1'-0"

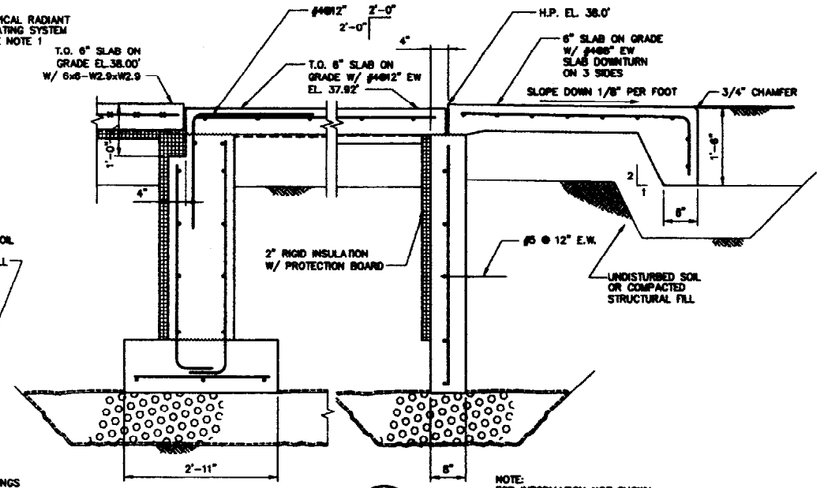

NOTE:
FOR INFORMATION NOT SHOWN AND SUBGRADE PREPARATION SEE SECTION 1 ON THIS SHEET.

SECTION 2 / S1-1
3/4" = 1'-0"

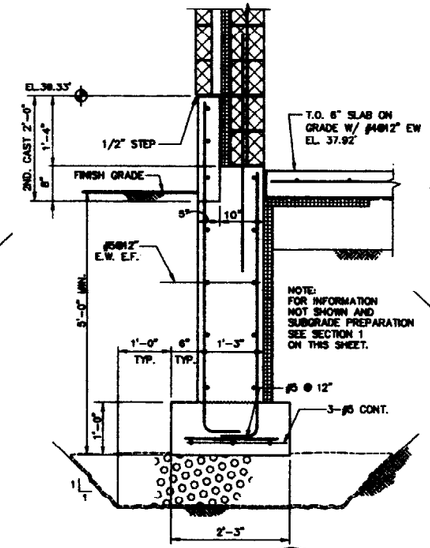

NOTE:
FOR INFORMATION NOT SHOWN AND SUBGRADE PREPARATION SEE SECTION 1 ON THIS SHEET.

SECTION 3 / S1-1
3/4" = 1'-0"

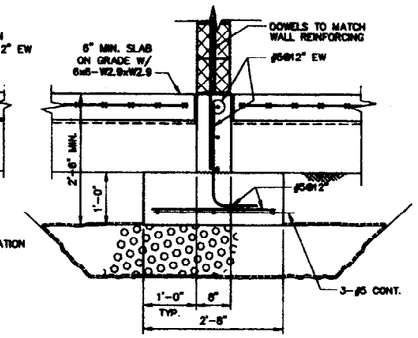

NOTE:
FOR INFORMATION NOT SHOWN AND SUBGRADE PREPARATION SEE SECTION 1 ON THIS SHEET.

SECTION 4 / S1-1
3/4" = 1'-0"

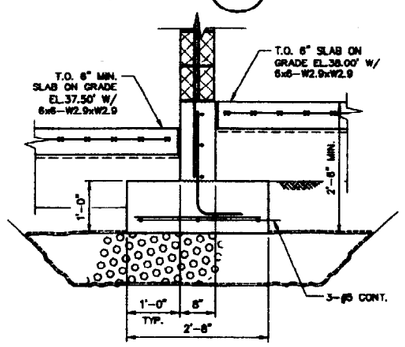

NOTE:
FOR INFORMATION NOT SHOWN AND SUBGRADE PREPARATION SEE SECTION 1 & 4 ON THIS SHEET.

SECTION 5 / S1-1
3/4" = 1'-0"

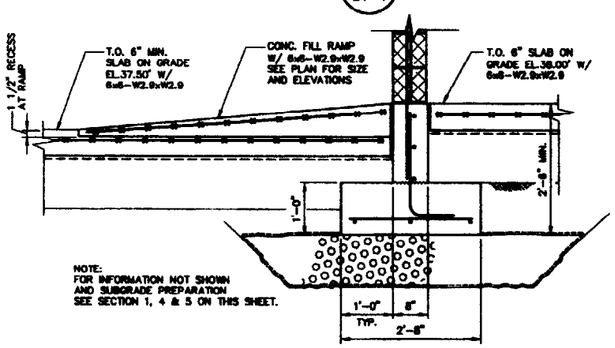

NOTE:
FOR INFORMATION NOT SHOWN AND SUBGRADE PREPARATION SEE SECTION 1, 4 & 5 ON THIS SHEET.

SECTION 6 / S1-1
3/4" = 1'-0"

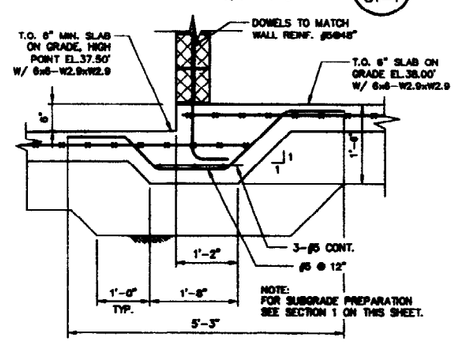

NOTE:
FOR SUBGRADE PREPARATION SEE SECTION 1 ON THIS SHEET.

SECTION 7 / S1-1
3/4" = 1'-0"

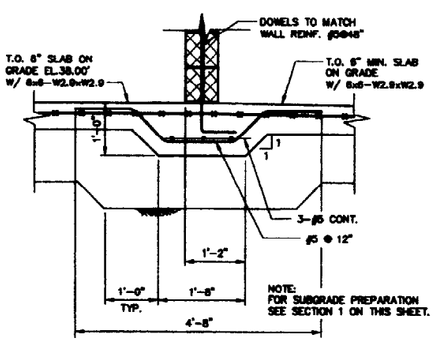

NOTE:
FOR SUBGRADE PREPARATION SEE SECTION 1 ON THIS SHEET.

SECTION 8 / S1-1
3/4" = 1'-0"

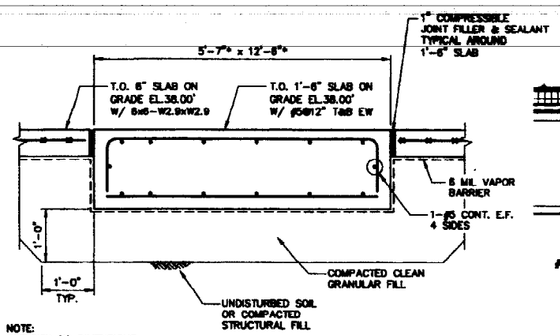

NOTE:
ASTERISK (*) DIMENSIONS TO BE VERIFIED BY EQUIPMENT MANUFACTURER.

SECTION 9 / S1-1
3/4" = 1'-0"

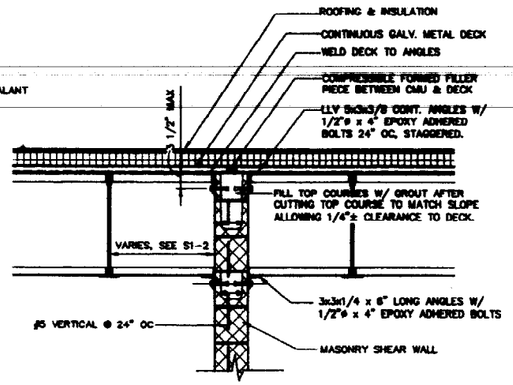

SECTION 10 / S1-2
3/4" = 1'-0"

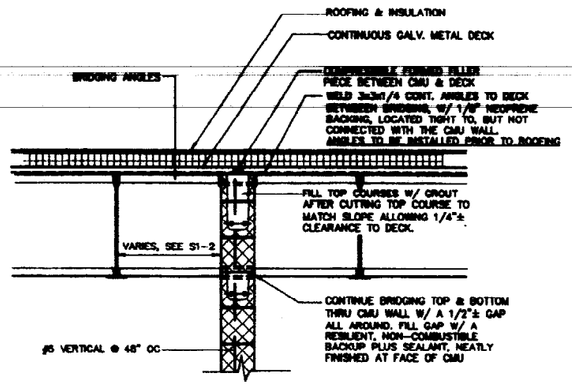

SECTION 11 / S1-2
3/4" = 1'-0"

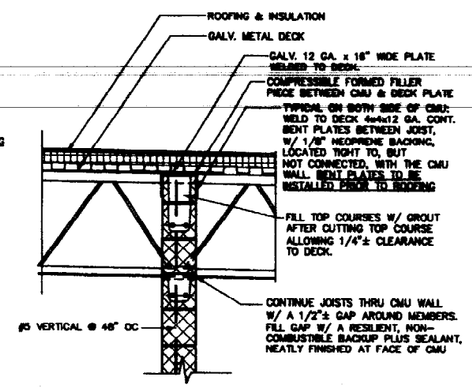

SECTION 12 / S1-2
3/4" = 1'-0"

DeLuca-Hoffman Associates, Inc.
Consulting Engineers
778 Main Street
South Portland, Maine 04106
207-775-1121

HNTB
HNTB CORPORATION
330 Passaic Avenue
Fairfield, New Jersey 07004
(973) 227-5460

LIN ASSOCIATES, INC.
CONSULTING ENGINEERS
BOSTON, MA (617)566-4216

KEY MAP

DATE	REVISION

PORTLAND INTERNATIONAL JETPORT
CITY OF PORTLAND
PORTLAND, MAINE

AIRFIELD LIGHTING VAULT

STRUCTURAL DETAILS

SCALE: 3/4"=1'-0"	DATE: 05/02/2003
FILE NO.: E3-01	HNTB JOB NO. 27360

STATE OF MAINE
ROBERT B.T. LEE
No. 9475
REGISTERED PROFESSIONAL ENGINEER

SHEET
S2-1

GENERAL NOTES

A GENERAL

A1 STRUCTURAL WORK SHALL CONFORM TO THE BOCA NATIONAL BUILDING CODE/1996.

A2 EXAMINE MECHANICAL, PLUMBING, AND ELECTRICAL DRAWINGS FOR VARIATIONS OF LOCATION AND DIMENSIONS OF CHASES, INSERTS, OPENINGS, SLEEVES, WASHES, DRIPS, REVEALS, DEPRESSIONS, AND OTHER PROJECT REQUIREMENTS NOT SHOWN ON DRAWINGS. ANY DISCREPANCIES SHALL BE BROUGHT TO THE ATTENTION OF THE ENGINEER.

A3 VERIFY AND COORDINATE DIMENSIONS RELATED TO THIS PROJECT. ANY DISCREPANCIES SHALL BE BROUGHT TO THE ATTENTION OF THE ENGINEER.

A4 OPENINGS IN SLAB AND WALLS LESS THAN 12" MAXIMUM DIMENSION ARE GENERALLY NOT SHOWN ON DRAWINGS. OPENINGS SHOWN ON DRAWINGS SHALL NOT BE REVISED WITHOUT PRIOR APPROVAL OF THE ENGINEER.

A5 TYPICAL DETAILS AND NOTES SHOWN ON DRAWINGS SHALL BE APPLICABLE TO ALL PARTS OF THE STRUCTURAL WORK EXCEPT WHERE SPECIFICALLY REQUIRED OTHERWISE BY CONTRACT DOCUMENTS.

A6 DETAILS NOT SPECIFICALLY SHOWN SHALL BE SIMILAR TO THOSE SHOWN FOR THE MOST NEARLY SIMILAR CONDITION AS DETERMINED BY THE ENGINEER.

B FOUNDATION

B1 FOUNDATION SHALL REST ON UNDISTURBED SOIL OR COMPACTED STRUCTURAL FILL BEARING CAPACITY OF MIN. 2.0 KSF. PROVIDE SUBGRADE PREPARATION UNDER FOUNDATIONS AND REMOVE UNACCEPTABLE MATERIAL FROM BENEATH STRUCTURES. REFER TO ATC ASSOCIATES INC. GEOTECHNICAL SUMMARY REPORT DATED DECEMBER 14, 1999.

B2 ALL STRUCTURAL FILL SHALL BE COMPACTED TO 95 % OF MAXIMUM DRY DENSITY AS DETERMINED BY THE MODIFIED PROCTOR TEST TO ACHIEVE BEARING CAPACITY SHOWN.

B3 SLAB ON COMPACTED GRADE SHALL REST ON 12" MIN. UNDISTURBED COMPETENT SOIL OR 95 % COMPACTED STRUCTURAL FILL.

B4 EXTERIOR CONSTRUCTION SHALL EXTEND BELOW FINISHED EXTERIOR GRADE TO A MINIMUM DEPTH OF 5'-0", UNLESS NOTED OTHERWISE.

B5 NO FOUNDAITON CONCRETE SHALL BE PLACED IN WATER OR ON FROZEN SUBGRADE MATERIAL.

C CONCRETE

C1 CONCRETE WORK SHALL CONFORM TO "BUILDING CODE REQUIREMENTS FOR REINFORCED CONCRETE (ACI 318-95; 318R-95)" AND "SPECIFICATIONS FOR STRUCTURAL CONCRETE FOR BUILDINGS (ACI 301-96)".

C2 UNLESS NOTED OTHERWISE, CONCRETE SHALL BE NORMAL WEIGHT AND HAVE A MINIMUM 28 DAY COMPRESSIVE STRENGTH OF 4000 PSI. MID-RANGE WATER REDUCER SHALL BE ADDED FOR INCREASED WORKABILITY.

C3 MAXIMUM SLUMP OF CAST-IN-PLACE CONCRETE SHALL BE 3" FOR SLABS AND 4" FOR FOOTING AND WALLS. FOR PUMPED CONCRETE MAX. 7 1/2".

C4 ALL CONCRETE SHALL BE AIR ENTRAINED PER SPECIFICATION REQUIREMENTS.

C5 CONSTRUCTION AND/OR CONTROL JOINTS SHOWN ON DRAWINGS ARE MANDATORY; ANY OMISSIONS, ADDITIONS, OR CHANGES SHALL BE SUBMITTED FOR REVIEW IN THE FORM OF A WRITTEN REQUEST TOGETHER WITH DRAWINGS OF THE PROPOSED JOINT LOCATIONS. MIN. 72 HOURS SHALL ELAPSE BETWEEN ADJACENT CONCRETE PLACEMENT.

C6 CONCRETE SLABS SHALL BE CAST LEVEL, UNLESS SHOWN OTHERWISE.

D REINFORCING

D1 REINFORCEMENT WORK OF DETAILING, FABRICATION, AND ERECTION SHALL CONFORM TO "BUILDING CODE REQUIREMENTS FOR REINFORCED CONCRETE (ACI 318-95; 318R-95)", "ACI DETAILING MANUAL (SP-66-1994)", "CRSI MANUAL OF STANDARD PRACTICE (DA4-96)," AND "STRUCTURAL WELDING CODE REINFORCING STEEL (AWS D1.4-92)."

D2 STEEL REINFORCEMENT, UNLESS NOTED OTHERWISE, SHALL CONFORM TO THE FOLLOWING:
(A) BARS, TIES, AND STIRRUPS.....ASTM A615 GRADE 60 (Fy=60,000 PSI)
(B) WELDED WIRE FABRIC (FLAT SHEETS).....ASTM A185

D3 PROVIDE AND SCHEDULE ON SHOP DRAWINGS THE NECESSARY ACCESSORIES TO HOLD REINFORCEMENT SECURELY IN POSITION, MINIMUM REQUIREMENTS SHALL BE: HIGH CHAIRS, 4'-0" O.C. WITH CONTINUOUS #5 SUPPORT BAR; SLAB BOLSTERS, CONTINUOUS AND 3'-6" O.C..

D4 MINIMUM CONCRETE PROTECTIVE COVERING FOR REINFORCEMENT, UNLESS NOTED OTHERWISE, SHALL BE AS FOLLOWS:
(A) UNFORMED SURFACES CAST AGAINST EARTH: ..... 3"
(B) FORMED SURFACES IN CONTACT WITH EARTH OR EXPOSED TO WEATHER: ..... 1 1/2"

D5 SPLICES SHALL BE LAPPED IN ACCORDANCE WITH CONTRACT DRAWING.

D6 WHERE CONTINUOUS REINFORCEMENT IS CALLED FOR, IT SHALL BE EXTENDED CONTINUOUSLY AROUND CORNERS AND LAPPED AT NECESSARY SPLICES OR HOOKED AT DISCONTINUOUS ENDS; LAPS SHALL BE CLASS B TENSION LAP SPLICES, UNLESS NOTED OTHERWISE.

D7 WHERE REINFORCEMENT IS NOT SHOWN ON DRAWINGS, PROVIDE REINFORCEMENT IN ACCORDANCE WITH APPLICABLE DETAILS AS DETERMINED BY THE ENGINEER; IN NO CASE SHALL REINFORCEMENT BE LESS THAN THE MINIMUM REINFORCEMENT PERMITTED BY THE APPLICABLE CODES.

D8 REINFORCEMENT SHALL BE CONTINUOUS THROUGH CONSTRUCTION JOINTS.

D9 DOWELS SHALL MATCH BAR SIZE AND NUMBER, UNLESS NOTED OTHERWISE.

D10 REINFORCEMENT SHALL NOT BE TACK WELDED.

D11 INSTALLATION OF REINFORCEMENT SHALL BE COMPLETED AT LEAST 24 HOURS PRIOR TO THE SCHEDULED CONCRETE PLACEMENT FOR INSPECTION BY ENGINEER.

E REINFORCED MASONRY

E1 CONCRETE MASONRY CONSTRUCTION SHALL CONFORM TO THE "BUILDING CODE REQUIREMENTS FOR MASONRY STRUCTURES (ACI 530-92)" AND THE "SPECIFICATIONS FOR MASONRY STRUCTURES (ACI 530.1-92)".

E2 MASONRY BLOCK WALLS ON THIS PROJECT SHALL BE GROUTED AND REINFORCED ON CENTER OF WALL AS FOLLOWS, UNLESS NOTED OTHERWISE: ALL 8" SHEAR WALLS #5@24" VERTICAL, AND OTHER 8" WALLS #5@48", 9GA. LADDER TYPE @ 16" AND W/ GROUTED BOND BEAM AS SHOWN W/ 2#5 CONT.

E3 REINFORCING BARS SHALL CONFORM TO ASTM A615, GRADE 60.

E4 REINF. BAR LAP SHALL BE 31" FOR #5.
LAP FOR HORIZONTAL LADDER TYPE REINF. SHALL BE 12".

E5 PROVIDE DOWELS TO MATCH VERT. REINF.

E6 MASONRY BLOCK SHALL BE TYPE N1 AND HAVE A MINIMUM 28 DAY PRISM (NOT BLOCK) STRENGTH f'm = 1500 PSI.

E7 MORTAR SHALL BE TYPE S WITH 28 DAY COMPRESSIVE STRENGTH OF 2000 PSI.

E8 GROUT SHALL HAVE A 28 DAY COMPRESSIVE STRENGTH OF 2000 PSI.

E9 PROVIDE 2#5 ADDITIONAL VERTICAL BARS AT CORNER OF WALLS AND AT OPENINGS. UNLESS NOTED OTHERWISE.

E10 MASONRY ERECTION SHALL HAVE FULL INSPECTION.

E11 CONTROL JOINT SHALL BE PROVIDED AT ALL INTERIOR MASONRY PARTITION AND BEARING/EXTERIOR WALL INTERSECTION. INTERRUPT HORIZONTAL REINFORCING AT CONTROL JOINT.

F STEEL DECK

F1 STEEL DECK WORK SHALL CONFORM TO THE "COLD-FORMED STEEL DESIGN MANUAL (ANSI S-873)","SPECIFICATION FOR STRUCTURAL STEEL BUILDINGS (AISC S335);" "STRUCTURAL WELDING CODE - SHEET STEEL (AWS D1.3)."

F2 ROOF CONSTRUCTION IN GENERAL CONSISTS OF 1 1/2" TYPE B 20 GA. STEEL DECK.

F3 STEEL DECK SHALL BE CONNECTED AT THE FOLLOWING SPACING:

DECK TO SUPPORT	ROOF DECK
ENDS	W 6"
END LAPS	W 6"
INTERMEDIATE SUPPORTS	W 6"
LONGITUDINAL EDGES	W 6"
DECK TO DECK	
LONGITUDINAL EDGES	S 7 SCREWS PER SPAN (1)
LONGITUDINAL FILLERS	S 7 SCREWS PER SPAN (1)

(1) WELDS SHALL BE USED WHERE DECK IS EXPOSED TO PUBLIC VIEW.
(2) W = 5/8" DIA. PUDDLE WELD
(3) S = #10 HEX HEAD SCREW

G STRUCTURAL STEEL

G1 ALL STEEL WORK SHALL CONFORM TO "SPECIFICATION FOR DESIGN FABRICATION AND ERECTION OF STRUCTURAL STEEL FOR BUILDINGS (AISC S335-1989)","CODE OF STANDARD PRACTICE FOR STEEL BUILDINGS & BRIDGES (AISC S302-1987)," AND "STRUCTURAL WELDING CODE - STEEL (AWS D1.1-1996)."

G2 ALL STEEL SHALL BE DETAILED IN ACCORDANCE WITH "DETAILING FOR STEEL CONSTRUCTION (AISC M013-1983)" AND, WHERE REQUIRED, DESIGNED IN ACCORDANCE WITH THE "MANUAL OF STEEL CONSTRUCTION, VOLUME II, CONNECTIONS (AISC M017-1992)" AND WITH THE CITED REFERENCES.

G3 ALL STEEL SHALL BE NEW STEEL CONFORMING TO ASTM A36 GRADE 36 (Fy = 36 KSI) FOR BARS AND SHAPES, AND ASTM A500 GR B (Fy=46KSI) FOR STRUCTURAL TUBING.

G4 WELDED CONNECTIONS SHALL BE MADE BY APPROVED CERTIFIED WELDERS USING FILLER METAL CONFORMING TO E70XX OR F7X=EXXX WITH LOW HYDROGEN.

G5 WELDS SHALL DEVELOP THE FULL STRENGTH OF THE MATERIALS BEING WELDED, UNLESS NOTED OTHERWISE, EXCEPT THAT FILLET WELDS SHALL BE MINIMUM OF 1/4"

G6 FIELD CUTTING OF STRUCTURAL STEEL OR ANY FIELD MODIFICATIONS OF STRUCTURAL STEEL SHALL NOT BE MADE WITHOUT PRIOR APPROVAL FOR EACH SPECIFIC CASE.

G7 ANCHOR BOLTS SHALL CONFORM TO ASTM A307.

H LOADS

H1 STRUCTURAL DESIGN LOADS: (CONFORMING TO BOCA NATIONAL BUILDING CODE/1996)

H2 DEAD LOADS
(A) WEIGHT OF BUILDING COMPONENTS.....ACTUAL WEIGHT

H3 LIVE LOADS
(A) REGULATOR AREA.....100 PSF
(B) OFFICE, GARAGE, WORK AREA, BATHROOM.....50 PSF
(C) GENERATOR AREA.....250 PSF
(D) ROOF SNOW LOAD.....36 PSF BASIC

H4 WIND LOAD - EXPOSURE C
BASIC VELOCITY PRESSURE.....Pv = 21 PSF

H5 SEISMIC LOAD
SEISMIC HAZARD EXPOSURE GROUP "III"
SEISMIC PERFORMANCE CATEGORY "C"
SITE COEFFICIENT, S_a =2.0
EFFECTIVE PEAK ACCELERATION, Aa =0.12

H6 DESIGN ALLOWABLE SOIL BEARING PRESSURE.....2.0 KSF

J JOIST

J1 JOISTS SHALL BE DESIGNED IN ACCORDANCE WITH THE LATEST AISC MANUAL AND STEEL JOIST INSTITUTE SPECIFICATIONS, AND SHALL BE FABRICATED BY A MANUFACTURER WHO IS A MEMBER OF OR MEETS THE REQUIREMENTS OF THE STEEL JOIST INSTITUTE.

J2 JOISTS SHALL RECEIVE ONE SHOP COAT OF PAINT STANDARD WITH MANUFACTURER U.N.O. FOR PAINTING REQUIREMENTS SEE SPECIFICATIONS 09912.

J3 ROOF JOISTS SHALL BE ANCHORED TO RESIST A MINIMUM NET UPLIFT OF 28 PSF.

J4 PROVIDE CEILING EXTENSIONS ON ALL JOISTS AND OUTRIGGERS SHALL BE FURNISHED AS REQUIRED.

J5 DESIGN OF JOISTS SHALL BE BASED ON AN ALLOWABLE FIBER STRESS OF 30,000 PSI.

J6 SUSPENDED LOADS FROM ANY JOIST SHALL NOT EXCEED THE EQUIVALENT OF UNIFORMLY DISTRIBUTED LOAD OF 10 LBS. PER SQUARE FOOT OF ITS TRIBUTARY AREA.

J7 SUSPENDED LOADS SHALL BE APPLIED ONLY AT PANEL POINTS OF JOISTS. ALL NECESSARY SUPPLEMENTAL FRAMING SHALL BE PROVIDED BY THE CONTRACTOR RESPONSIBLE FOR THE SUSPENDED LOAD.

J8 EVERY THIRD JOIST BEARING ON MASONRY SHALL BE PROVIDED WITH AN END ANCHOR EXCEPT AS NOTED.

J9 END JOISTS SHALL BE ANCHORED TO WALL AT TOP AND BOTTOM CHORDS WITH LATERAL ANCHORS NOT OVER 4'-0" O.C. AS WELL AS AT ENDS OF BRIDGING LINES.

J10 PROVIDE BRIDGING IN ACCORDANCE WITH THE REQUIREMENTS OF THE STEEL JOIST INSTITUTE.

J11 ROOF JOISTS BEARING ON MASONRY WALLS SHALL FULLY BEAR ON 6" X 1/2" STEEL PLATES U.N.O.

J12 WHERE JOISTS BEAR ON MASONRY, AT LEAST 3 COURSES OF GROUTED SOLID BLOCK SHALL BE LAID DIRECTLY UNDER JOISTS U.N.O.

J13 SPECIAL JOIST SEATS SHALL BE PROVIDED AS REQUIRED.

J14 THE CONTRACTOR SHALL SUBMIT CHECKED SHOP DRAWINGS SHOWING THE LOCATION OF ALL JOISTS AND THE REQUIRED DETAILS FOR PROPER INSTALLATION.

J15 ALL ATTACHMENTS TO JOISTS (HANGERS FOR PIPES AND MECHANICAL EQUIPMENT) SHALL BE FROM PANEL POINT ONLY.

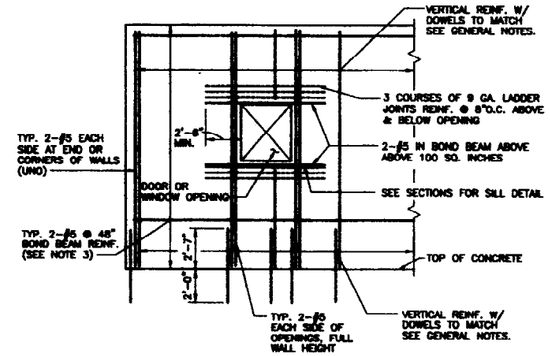

1 ELEVATION 8" CMU
NOT TO SCALE

NOTE:
1. ADDITIONAL REINFORCING BARS ARE NOT REQUIRED FOR OPENINGS LESS THAN 100 SQ. INCHES & LESS THAN 12" IN ANY DIRECTION.
2. OPENINGS GREATER THAN 100 SQ. INCHES SHALL BE REINFORCED AS SHOWN.
3. FOR TYP. CONT. BOND BEAMS SEE DRAWING A2-2.

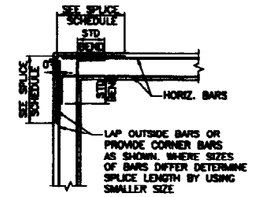

2 HORIZONTAL WALL REINF. PLAN AT CORNER
NOT TO SCALE

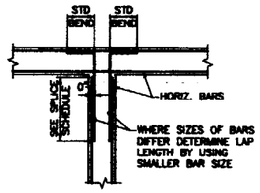

3 HORIZONTAL WALL REINF. PLAN AT INTERSECTIONS
NOT TO SCALE

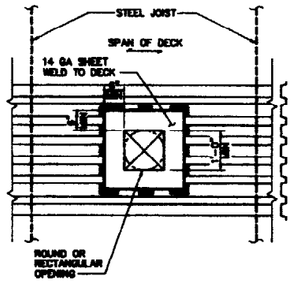

4 DETAILS AT OPENINGS IN ROOF DECK OPENINGS 1'-0" OR LESS
NOT TO SCALE

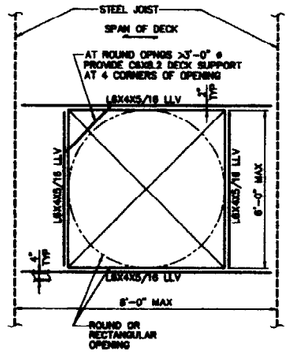

5 DETAILS AT OPENINGS IN ROOF DECK OPENINGS >1'-0" TO 6'-0"
NOT TO SCALE

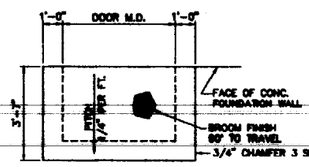

PLAN

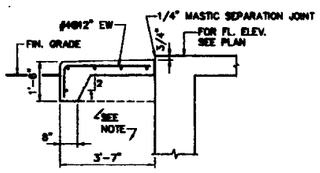

SECTION

NOTE:
PROVIDE 4'-0" (3EX 8" LAYERS) OF FREE DRAINING NON-FROST SUSCEPTIBLE GRANULAR MATERIAL CONTAINING NOT MORE THAN 5% (BY WEIGHT) PASSING NO. 200 SIEVE. COMPACT EACH LAYER TO 93% OF MAXIMUM DENSITY.

7 CONCRETE ENTRANCE PAD DETAIL
NOT TO SCALE

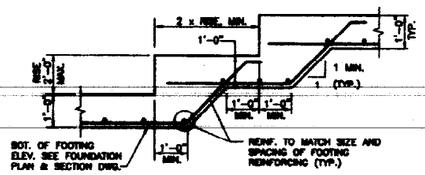

6 TYPICAL STEP FOOTING DETAIL
NOT TO SCALE

BAR #	SPLICE TOP	SPLICE OTHER
3	24	19
4	32	25
5	40	31
6	48	37

8 REBAR SPLICE DATA (ACI 318)
FOR f'c = 4000 psi, NORMAL WEIGHT, fy = 60 psi, UNCOATED

DeLuce-Hoffman Associates, Inc.
Consulting Engineers
778 Main Street
South Portland, Maine 04106
207-775-1121

HNTB
HNTB CORPORATION
330 Passaic Avenue
Fairfield, New Jersey 07004
(973) 227-8460

LIN ASSOCIATES, INC.
CONSULTING ENGINEERS
BOSTON, MA (617)666-4216

KEY MAP

DATE	REVISION

PORTLAND INTERNATIONAL JETPORT
CITY OF PORTLAND
PORTLAND, MAINE

AIRFIELD LIGHTING VAULT

GENERAL NOTES & TYPICAL DETAILS

SCALE: NO SCALE	DATE: 05/02/2003
FILE NO.: E3-01	HNTB JOB NO. 27360

SHEET S2-2

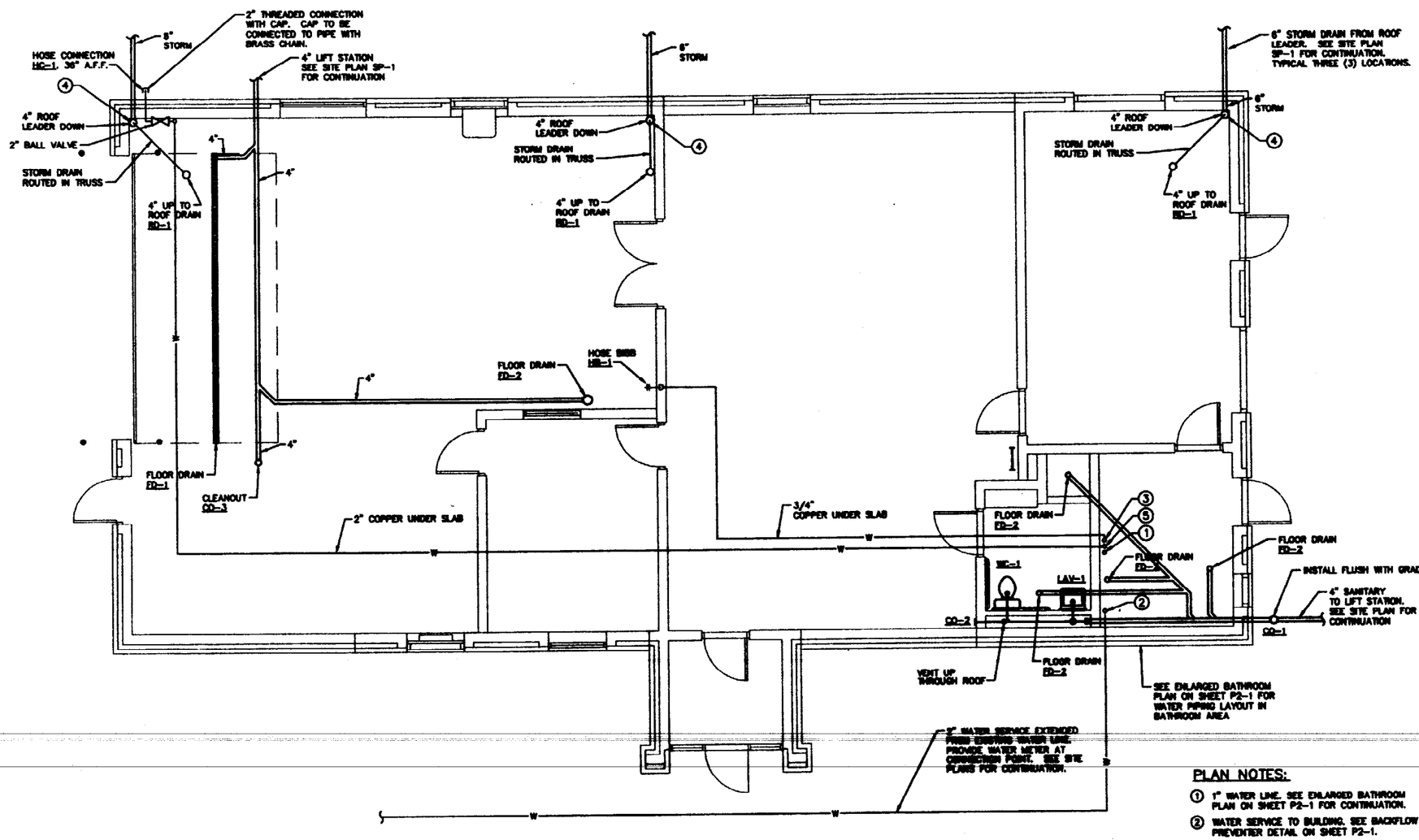

PLUMBING PLAN

1/4" = 1'-0"

LEGEND

- PIPING UNDER SLAB/GROUND
- PIPING ABOVE SLAB
- —W— WATER PIPING
- TRENCH DRAIN

PLAN NOTES:

1. 1" WATER LINE. SEE ENLARGED BATHROOM PLAN ON SHEET P2-1 FOR CONTINUATION.
2. WATER SERVICE TO BUILDING. SEE BACKFLOW PREVENTER DETAIL ON SHEET P2-1.
3. 3/4" WATER DOWN UNDER SLAB TO HOSE BIBB HB-1 IN GARAGE.
4. PROVIDE 4" CLEANOUT IN ROOF LEADER AT 48" A.F.F. TRANSITION FROM 4" TO 6" ROOF LEADER AT FLOOR. 6" THROUGH FLOOR.
5. 2" WATER DOWN UNDER SLAB TO HOSE CONNECTION HC-1.

GENERAL NOTES:

1. ALL WATER PIPING TO BE COPPER INSULATED WITH 1/2" ARMAFLEX.
2. SEE SANITARY RISER DIAGRAM ON SHEET P2-1 FOR PLUMBING VENT LINES AND PIPE SIZES.
3. ALL SANITARY AND STORM DRAINAGE AND VENT PIPING SHALL BE OF DWV TYPE.
4. ALL WATER SHUT-OFF VALVES TO BE 1/4 TURN VALVE, BRASS BODY WITH BRONZE BALL, VINYL HANDLE COVER, PTFE SEATS AND 400 PSIG MINIMUM CWP RATING.

DeLuco-Hoffman Associates, Inc.
Consulting Engineers
775 Main Street
South Portland, Maine 04106
207-775-1121

HNTB
HNTB CORPORATION
330 Passaic Avenue
Fairfield, New Jersey 07004
(973) 227-8460

LIN ASSOCIATES, INC.
CONSULTING ENGINEERS
BOSTON, MA (617)868-4319

KEY MAP

DATE	REVISION

PORTLAND INTERNATIONAL JETPORT
CITY OF PORTLAND
PORTLAND, MAINE

AIRFIELD LIGHTING VAULT

PLUMBING PLAN

SCALE: 1/4" = 1'-0"	DATE: 5/20/03
FILE NO.: P1-1	HNTB JOB NO. 27380

HARRY A. STEPHENSON 5/20/2003 8886 REGISTERED PROFESSIONAL ENGINEER

SHEET

P1-1

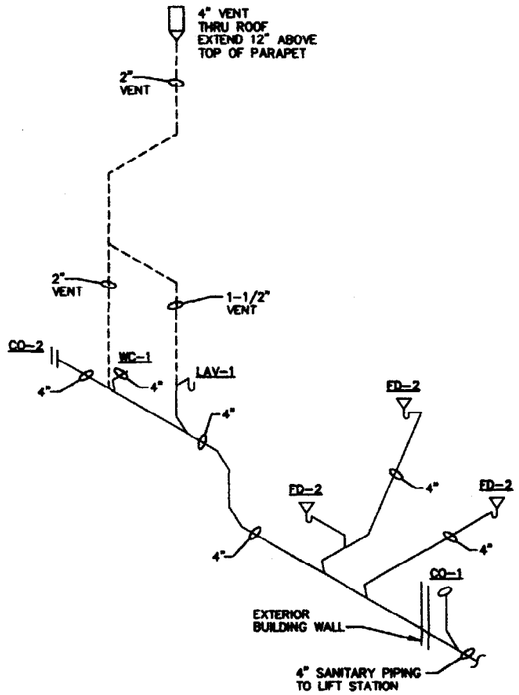

SANITARY RISER DIAGRAM
N.T.S.

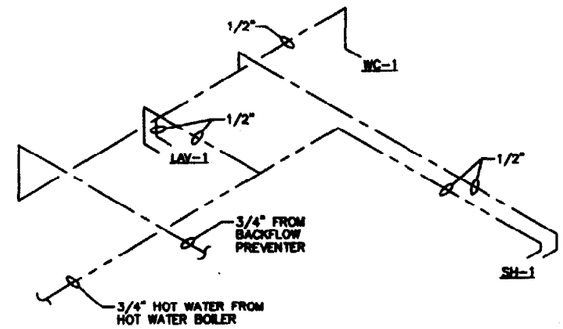

LEGEND

COLD WATER PIPING

HOT WATER PIPING

SHUT-OFF VALVE (BALL VALVE)

POTABLE WATER RISER DIAGRAM
N.T.S.

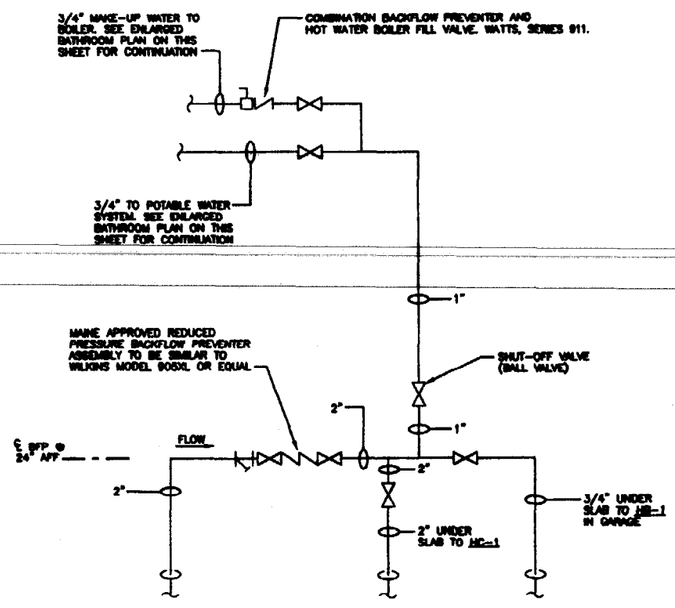

BACKFLOW PREVENTER DETAIL
N.T.S.

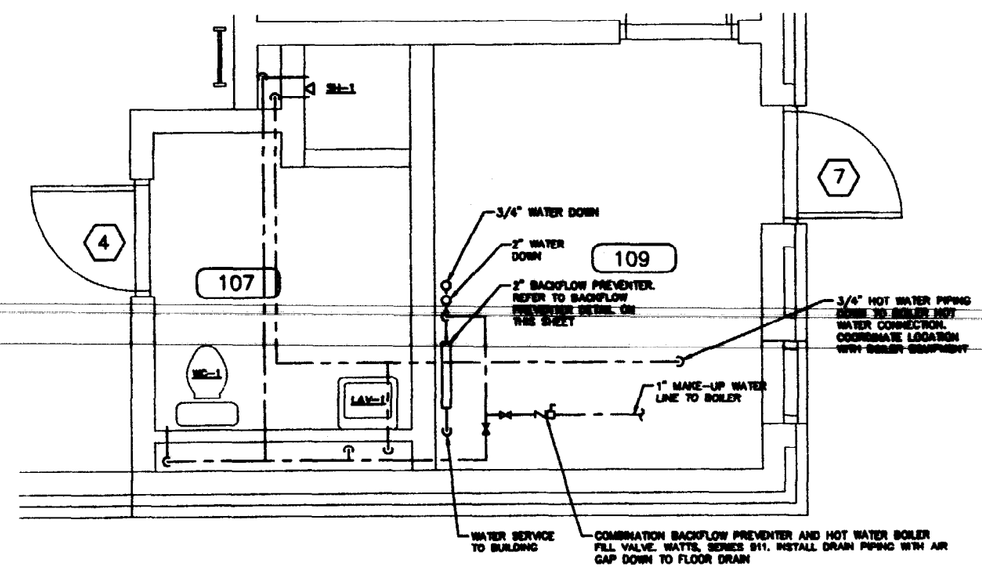

NOTES:
1. SEE POTABLE WATER RISER DIAGRAM FOR PIPE SIZES.
2. INSULATE ALL HOT AND COLD WATER PIPING WITH 1/2" ARMAFLEX
3. ALL WATER PIPING TO BE COPPER.
4. WATER CLOSET AND LAVATORY SHALL HAVE WATER SUPPLY STOPS.

ENLARGED BATHROOM PLAN
1/2" = 1'-0"

DeLuca-Hoffman Associates, Inc.
Consulting Engineers
778 Main Street
South Portland, Maine 04106
207-775-1121

HNTB
HNTB CORPORATION
330 Passaic Avenue
Fairfield, New Jersey 07004
(973) 227-6480

LIN ASSOCIATES, INC.
CONSULTING ENGINEERS
BOSTON, MA (617)868-4216

KEY MAP

DATE	REVISION

PORTLAND INTERNATIONAL JETPORT
CITY OF PORTLAND
PORTLAND, MAINE

AIRFIELD LIGHTING VAULT

ENLARGED PLUMBING PLAN AND DETAILS

SCALE: AS NOTED	DATE: 5/20/03
FILE NO.: P2-1	HNTB JOB NO. 27380

SHEET
P2-1

GENERAL NOTES:

1. PROVIDE SIZES OF FUEL PIPE FROM DAY TANK TO OUTSIDE AST AS REQUIRED BY SUPPLIER OF DAY TANK AND SUPPLY AND RETURN PUMPS.
2. PROVIDE SUPPLY AND RETURN LINES FROM ENGINE GENERATOR AS REQUIRED BY SUPPLIER OF ENGINE GENERATOR.
3. REFER TO SPEC. SECTION 02554 FOR PIPING REQUIREMENTS.

FUEL SYSTEM FLOAT SWITCH SCHEDULE	
LSHH-4	MAIN STORAGE TANK RUPTURE FLOAT SWITCH.
LSL-4	MAIN STORAGE TANK LOW LEVEL FLOAT SWITCH, SET AT 35% FUEL LEVEL.
LSHH-3	DAY TANK RUPTURE FLOAT SWITCH, SET AT 5% OF CONTAINMENT FUEL LEVEL. ACTIVATE COMMON ALARM RELAY.
LSHH-2	DAY TANK CRITICAL HIGH FUEL LEVEL FLOAT SWITCH, SET AT 103% FUEL LEVEL. START RETURN PUMP, CLOSE SUPPLY SOLENOID VALVE. ACTIVATE COMMON ALARM RELAY.
LSH-2	DAY TANK RETURN FUEL PUMP OFF FLOAT SWITCH, SET AT 96% FUEL LEVEL.
LSHH-1	DAY TANK HIGH LEVEL FUEL LEVEL FLOAT SWITCH, SET AT 102% FUEL LEVEL. ACTIVATE COMMON ALARM RELAY.
LSH-1	DAY TANK FLOAT SWITCH, SET AT 100% FUEL LEVEL. STOP SUPPLY PUMP AND ALTERNATE SUPPLY PUMPS.
LSL-1	DAY TANK FLOAT SWITCH, SET AT 86% FUEL LEVEL. START SUPPLY PUMP.
LSLL-1	DAY TANK LOW LEVEL FLOAT SWITCH, SET AT 78% FUEL LEVEL. ACTIVATE COMMON ALARM RELAY.

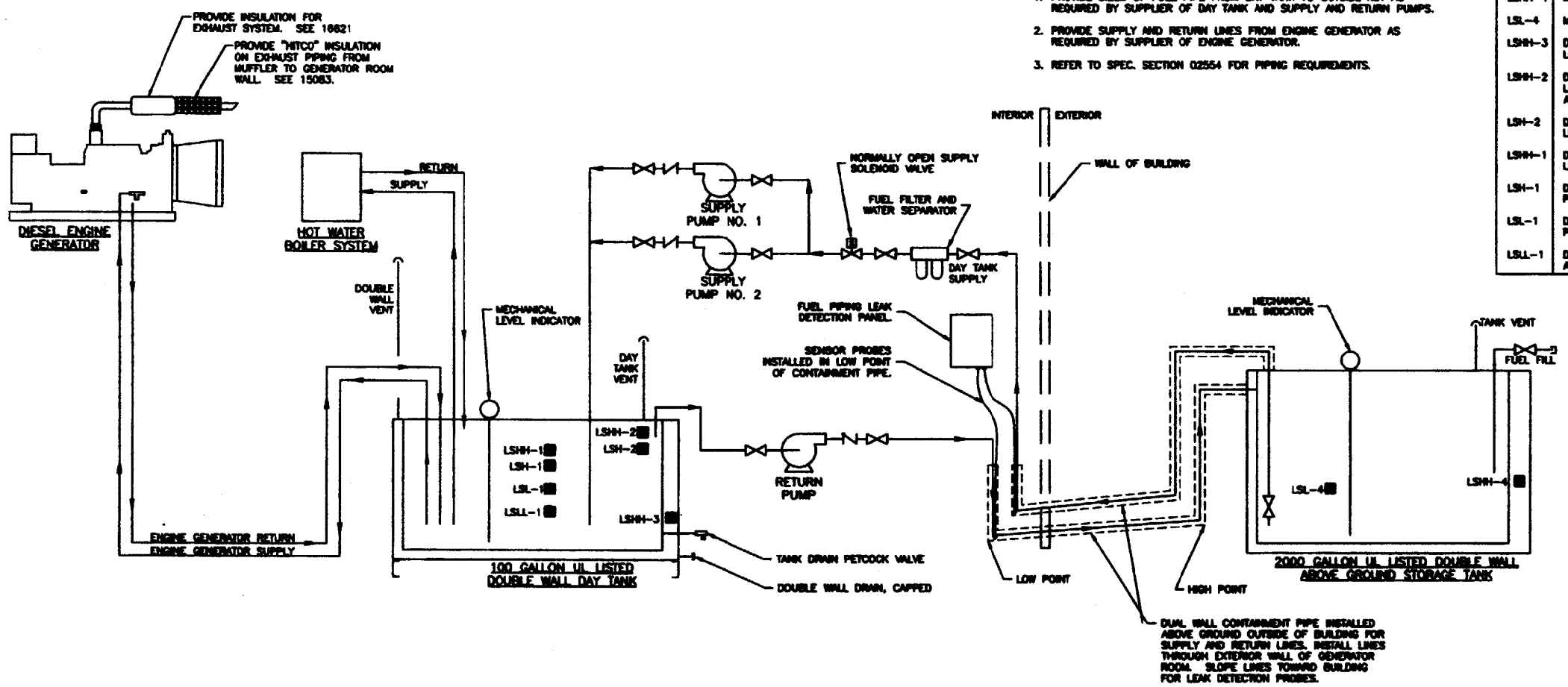

DIESEL FUEL PIPING SCHEMATIC

SCALE: NONE

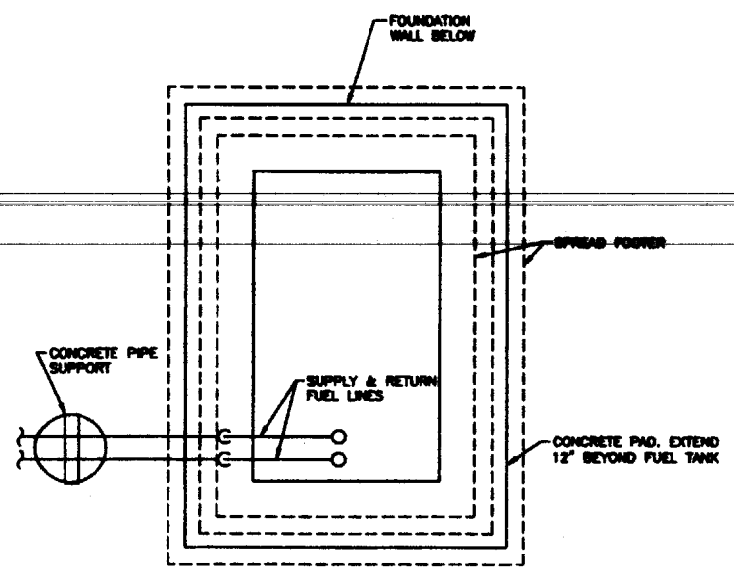

FUEL TANK PLAN

SCALE: NONE

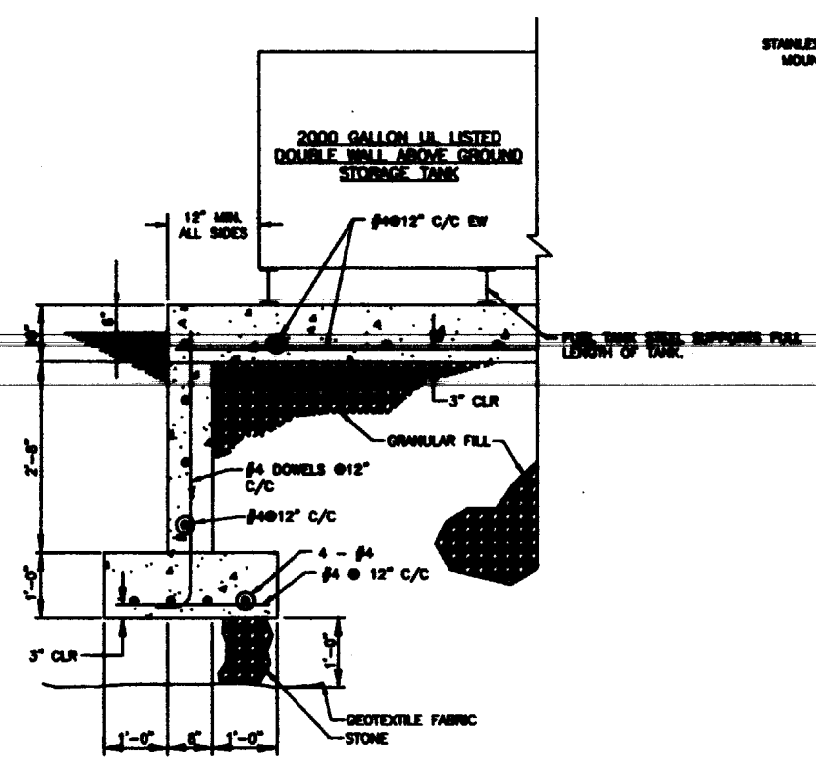

NOTE: PROVIDE HOLD DOWN BOLTS AS RECOMMENDED BY AST MANUFACTURER.

FUEL TANK CONCRETE PAD AND FOUNDATION DETAIL TYPICAL OF ALL FOUR SIDES

SCALE: NONE

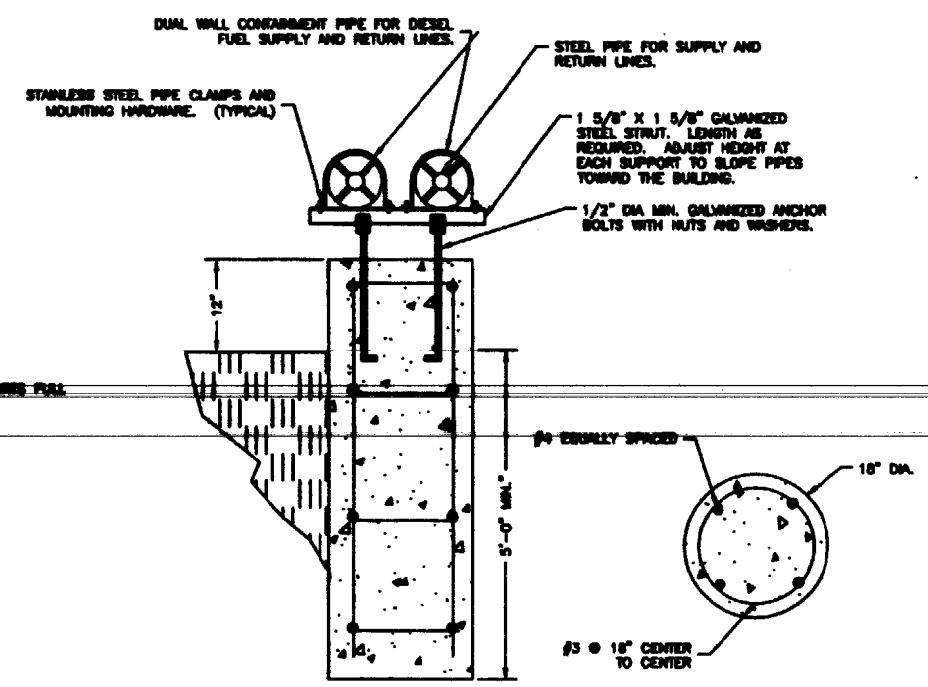

NOTE: INSTALL SUPPORTS AT FIVE (5) FOOT INTERVALS FROM BUILDING TO ABOVE GROUND STORAGE TANK.

EXTERIOR FUEL PIPE SUPPORT DETAIL

SCALE: NONE

DeLuco-Hoffman Associates, Inc.
Consulting Engineers
770 Main Street
South Portland, Maine 04106
207-775-1121

HNTB
HNTB CORPORATION
330 Passaic Avenue
Fairfield, New Jersey 07004
(973) 227-6480

LIN ASSOCIATES, INC.
CONSULTING ENGINEERS
BOSTON, MA (617)566-4219

KEY MAP

DATE	REVISION

PORTLAND INTERNATIONAL JETPORT
CITY OF PORTLAND
PORTLAND, MAINE

AIRFIELD LIGHTING VAULT

GENERATOR DETAILS

SCALE: None	DATE: 5/20/03
FILE NO.: P3-1	HNTB JOB NO. 27380

SHEET

P3-1

LIGHTING FIXTURES

A 4 b	FLUORESCENT LIGHT FIXTURE	FIXTURE TYPE A FIXTURE CIRCUIT NO. 4 SWITCHING DUTY b
	FLUORESCENT FIXTURE	WITH EMERGENCY BALLAST OR ON EMERGENCY CIRCUIT
4 B	INCANDESCENT OR H.I.D. LIGHT FIXTURE	FIXTURE TYPE A FIXTURE CIRCUIT NO. 4 SWITCHING DUTY b
	FIXTURE ON EMERGENCY CIRCUIT	
	EXIT LIGHT FIXTURE	ARROW INDICATES DIRECTION OF MEANS OF EGRESS
	HIGH PRESSURE SODIUM LIGHT FIXTURE, POLE AND FOUNDATION	
	EMERGENCY LIGHT FIXTURE (BATTERY PACK)	

RECEPTACLES

2 WP	DUPLEX RECEPTACLE OUTLET NEMA 5-20R	CIRCUIT NO. 2 WP=WEATHERPROOF TYPE GFI=GROUND FAULT INTERRUPTING TYPE MOUNT +12" AFF (U.N.O.)
	DUPLEX RECEPTACLE OUTLET-SPLIT WIRED	
	FLOOR DUPLEX RECEPTACLE OUTLET	
	SPECIAL PURPOSE RECEPTACLE OUTLET	
	SPECIAL PURPOSE CONNECTION	
	FLOOR SPECIAL PURPOSE OUTLET	
	PEDESTAL MOUNTED OUTLET	
	CLOCK AND CLOCK HANGER RECEPTACLE	
	WALL VOICE/DATA OUTLET	MOUNT +12" AFF (U.N.O.)
	EQUIPMENT CONNECTION	
	MULTI-OUTLET SURFACE RACEWAY	(WIRE MOLD)

SWITCHING DEVICES

	SINGLE POLE SWITCH	20A, 120/277 VOLT (U.N.O.) MOUNT +48" AFF (U.N.O.)
2P	DOUBLE POLE SWITCH	SWITCHING DUTY a
3	THREE WAY SWITCH	SWITCHING DUTY a
4	FOUR WAY SWITCH	SWITCHING DUTY a
T	TIME SWITCH	
D	DOOR SWITCH	
K	KEY OPERATED SWITCH	
P	SWITCH WITH PILOT LIGHT	
600W DM	DIMMER SWITCH	
MC	MOMENTARY CONTACT SWITCH	
	START/STOP PUSHBUTTON STATION	NEMA 4X ENCLOSURE (U.N.O.)
MC	MOMENTARY CONTACT SWITCH	

REMOTE CONTROL STATIONS FOR MOTORS & EQUIP.

	MOTORIZED VALVE		INSTRUMENTATION EQUIP.
	FLOW METER		ALARM HORN
	FLOW SWITCH		ELAPSED TIME METER
	LEVEL SWITCH		PUSHBUTTON STATION
	SOLENOID SWITCH	P	PHOTO CELL
	TRANSMITTER	T	THERMOSTAT
	MODULATING VALVE	H	HUMIDISTAT
TO	TORQUE OVERLOAD		FLOAT SWITCH (S)
PS	PRESSURE SWITCH	LSH 26	INSTRUMENTATION BALLOON/EQUIPMENT TAG NUMBERS
S	ON-OFF SELECTOR SWITCH		

PANELBOARDS, DISCONNECTS & RELATED EQUIPMENT

AA	PANELBOARD	NORMAL POWER AA (DOUBLE LETTER) = 480/277V PANEL A (SINGLE LETTER) = 208/120V PANEL
	PANELBOARD	EMERGENCY POWER
	PANELBOARD	CONTROL/INSTRUMENTATION
J	DISCONNECT SWITCH	OUTDOOR = NEMA 4X ENCLOSURE (U.N.O.) INDOOR = NEMA 12 ENCLOSURE (U.N.O.)
4 J	DISCONNECT SWITCH W/AUXILIARY POLE	(TORQUE OVERLOAD) (MOTOR HEATER)
5 J	MANUAL MOTOR STARTER	
6 J	COMBINATION MOTOR CONTROLLER & DISCONNECTION MEANS	
	BUSWAY	(SERVICE FEEDER OR PLUG-IN)
	CABLE TRAY (LADDER OR CHANNEL TYPE)	
	WIREWAY	
TC	TERMINAL CABINET	
PB	PULLBOX	

CONDUIT AND WIRE

#10	LONG DASH WITH DOT=GROUND CONDUCTOR	NUMBER INDICATES WIRE SIZE, IF OTHER THAN #12 AWG
	LONG DASH=NEUTRAL CONDUCTOR	
	SHORT DASH=PHASE CONDUCTOR (S)	
101	CONDUIT #101	
	CONDUIT CONCEALED IN CONC. SLAB OR ABOVE CEILING	
	CONDUIT EXPOSED	
	CONDUIT CONCEALED IN EARTH	DIRECT BURIED OR UNDERGROUND
A-6	CONDUIT HOME RUN TO PANEL "A" - CIRCUIT NO. 6	
	OPEN CIRCLE = CONDUIT TURNING UP	
	CLOSED CIRCLE = CONDUIT TURNING DOWN	
	CONDUIT SEAL, COMPOUND FILLED	
	FLEXIBLE CONDUIT CONNECTION	
	CAPPED CONDUIT	

SPECIAL SYSTEMS

F	FIRE ALARM MANUAL PULL STATION	S I	AUTOMATIC SMOKE DETECTOR, IONIZATION TYPE
FH	FIRE ALARM STATION AND HORN AUDIO VISUAL	H 200F	AUTOMATIC THERMAL FIRE DETECTOR, 200°F
F	FIRE ALARM HORN/STROBE	S	HORN TYPE SPEAKER
F WP	WEATHERPROOF FIRE ALARM HORN	S WP	WEATHERPROOF HORN TYPE SPEAKER
F	FIRE ALARM BELL		CEILING TYPE SPEAKER (RECESSED)
S	FIRE ALARM STROBE		INFRARED FLAME DETECTOR

MISCELLANEOUS

C	CONTACTOR IN ENCLOSURE		MOTOR (5-HP)
	WALL MOUNTED UNIT		MOTORIZED LOUVER
F	FLOAT SWITCH		MOTORIZED DAMPER
J	JUNCTION BOX	2/C	TWO CONDUCTOR
MH#1	MAN HOLE NO. 1	#	PHASE
HH#1	HAND HOLE NO. 1		GROUND ROD
		G	GROUND ELECTRODE CONDUCTOR

SCHEMATIC SYMBOLS

- KNIFE SWITCH
- 100A FUSED KNIFE SWITCH
- 100/225 CIRCUIT BREAKER — 100 = TRIP SETTING (AMPERES), 225 = FRAME SIZE (AMPERES)
- 2 FVNR — 3-PHASE MOTOR STARTER – NUMBER INDICATES NEMA SIZE #2; LETTERS INDICATES STARTER TYPE – FVNR=FULL VOLTAGE NON-REVERSING
- POWER TRANSFORMER
- CONTROL POWER TRANSFORMER
- CURRENT TRANSFORMER
- POTENTIAL TRANSFORMER
- THERMAL OVERLOAD (O.L.)
- FUSE
- AM AMMETER
- L.A. LIGHTNING ARRESTER
- GROUND
- VM VOLTMETER

OPERATORS

- SELECTOR SWITCH — H-O-A INDICATES HAND-OFF-AUTOMATIC; H-O-R INDICATES HAND-OFF-REMOTE; X INDICATES POSITION AT WHICH CONTACTS ARE CLOSED; O INDICATES POSITION AT WHICH CONTACTS ARE OPENED
- NORMALLY OPEN (N.O.) PUSHBUTTON (PB.)
- NORMALLY CLOSED (N.C.) PUSHBUTTON (PB.)
- MUSHROOM HEAD PB. (MAINTAINED)

RELAYS AND COILS

- M 2 — DEVICE COIL OR RELAY
  - M -MOTOR STARTER COIL
  - C -CONTACTOR RELAY
  - CR -CONTROL RELAY
  - TR -TIME DELAY RELAY
  - ETM -ELAPSED TIME METER
- A — PILOT LIGHT
  - A -AMBER
  - B -BLUE
  - G -GREEN
  - R -RED
  - W -WHITE

CONTACTS AND PILOT DEVICES INSTANTANEOUS CONTACTS

- N.O. CONTACT
- N.C. CONTACT

TIMED CONTACTS

- N.O. - TIME DELAY CLOSING
- N.O. - TIME DELAY OPENING
- N.C. - TIME DELAY OPENING
- N.C. - TIME DELAY CLOSING

PILOT DEVICES

- LIQUID LEVEL SWITCH (LS)
- FLOW SWITCH (FS)
- PRESSURE SWITCH (PS)
- LIMIT SWITCH (LS)
- TEMPERATURE SWITCH (TS)

CONTACT SYMBOLS TYPICAL FOR ALL PILOT DEVICES

- SINGLE POLE SINGLE THROW (SPST) N.O. (CLOSES ON RISING PROCESS VARIABLE)
- (SPST) N.C. (OPENS ON RISING PROCESS VARIABLE)

WIRING AND OTHER SYMBOLS

- CONDUCTORS NOT CONNECTED
- CONDUCTORS CONNECTED
- MECHANICALLY CONNECTED
- TERMINATION FOR EXTERAL WIRING TO BE PROVIDED

SITE PLAN SYMBOLS

- EXISTING TELEPHONE POLE
- EXISTING POWER POLE
- EXISTING TELEPHONE AND POWER POLE
- EXISTING SITE LIGHTING UNIT
- NEW TELEPHONE POLE
- NEW POWER POLE
- NEW SITE LIGHTING UNIT

ELECTRICAL ABBREVIATIONS

A	AMPERE(S)	LA	LIGHTING ARRESTOR
AC	ALTERNATING CURRENT	LTG	LIGHTING
AFF	ABOVE FINISHED FLOOR	LV	LOW VOLTAGE
AM	AMMETER	LSR	LOCAL-OFF-REMOTE
AMP	AMPERE(S)	M	MAGNETIC MOTOR STARTER COIL
AS	AMMETER SWITCH	MAX	MAXIMUM
ATS	AUTOMATIC TRANSFER SWITCH	MCC	MOTOR CONTROL CENTER
AWG	AMERICAN WIRE GAUGE	MFR	MANUFACTURER
BLDG	BUILDING	MH	MANHOLE
BKR	BREAKER	MIN	MINIMUM
C	CONDUIT	N	NEUTRAL
3/C	THD CONDUCTOR(TYP)	N/A	NOT APPLICABLE
CB	CIRCUIT BREAKER	NEMA	NATIONAL ELECTRICAL MANUFACTURERS ASSOCIATION
CKT	CIRCUIT		
CMS	CENTRAL MONITORING SYSTEM	NO	NUMBER
CPT	CONTROL POWER TRANSFORMER	NEC	NATIONAL ELECTRICAL CODE
CR	CONTROL RELAY	NF	NON-FUSED
CT	CURRENT TRANSFORMER	NTS	NOT TO SCALE
CU	COPPER	OL	OVERLOAD
DC	DIRECT CURRENT	SP	THD POLE
DISC	DISCONNECT	PB	PUSHBUTTON
DWG	DRAWING	PNL	PANEL
EF	EXHAUST FAN	PVC	POLYVINYL CHLORIDE
ELEV	ELEVATOR	RGS	RIGID GALVANIZED STEEL
EMERG	EMERGENCY	RVNR	REDUCED VOLTAGE NON-REVERSING AUTOTRANSFORMER
EMT	ELECTRICAL METALLIC TUBING		
EQUIP	EQUIPMENT	SHLD	SHIELDED
ETM	ELAPSED TIME METER	SHT	SHEET
EWC	ELECTRIC WATER COOLER	SP	SINGLE POLE
EXHST	EXHAUST	SPDT	SINGLE POLE DOUBLE THROW
EXP	EXPLOSION PROOF	SPEC	SPECIFICATION
F	FUSED OR FUSE	SPST	SINGLE POLE SINGLE THROW
FMC	FLEXIBLE METALLIC CONDUIT	STR	STARTER
FVNR	FULL-VOLTAGE NON-REVERSING	SW	SWITCH
FVR	FULL-VOLTAGE REVERSING	TB	TERMINAL BLOCK
G	GROUND	TYP	TYPICAL
GALV	GALVANIZED	UNO	UNLESS NOTED OTHERWISE
GF	GROUND FAULT	UL	UNDERWRITERS LABORATORIES
GFI	GROUND FAULT INTERRUPTER	V	VOLTS
GND	GROUND	VFD	VARIABLE FREQUENCY DRIVE
HH	HANDHOLE	VM	VOLTMETER
HID	HIGH INTENSITY DISCHARGE	VS	VOLTMETER SWITCH
HOA	HAND-OFF-AUTOMATIC	VSD	VARIABLE SPEED DRIVE
HOR	HAND-OFF-REMOTE	W	WIRE/WATT
HP	HORSEPOWER	W/	WITH
HPS	HIGH PRESSURE SODIUM (LTG)	WP	WEATHERPROOF
IMC	INTERMEDIATE METALLIC CONDUIT	XFMR	TRANSFORMER
JB	JUNCTION BOX	XFR	TRANSFER
KV	KILO VOLTS		
KVA	KILO VOLTS-AMPS		
KVAR	KILOVAR		

NOTE:

POWER & CONTROL GRAPHIC SYMBOLS FOR ELECTRICAL DIAGRAMS CONFORM TO IEEE STD. 315, CSA Z99, ANSI Y32.2 & Y32.9

DeLuca-Hoffman Associates, Inc.
Consulting Engineers
778 Main Street
South Portland, Maine 04106
207-775-1121

HNTB
HNTB CORPORATION
330 Passaic Avenue
Fairfield, New Jersey 07004
(973) 227-6460

LIN ASSOCIATES, INC.
CONSULTING ENGINEERS
BOSTON, MA (617)566-4216

KEY MAP

DATE	REVISION

PORTLAND INTERNATIONAL JETPORT
CITY OF PORTLAND
PORTLAND, MAINE

AIRFIELD LIGHTING VAULT

ELECTRICAL LEGEND

SCALE: NONE	DATE: 8/20/03
FILE NO.: E1-1	HNTB JOB NO. 27380

HARRY G. PETTIS 5/11/2004 REGISTERED PROFESSIONAL ENGINEER

SHEET

E1-1

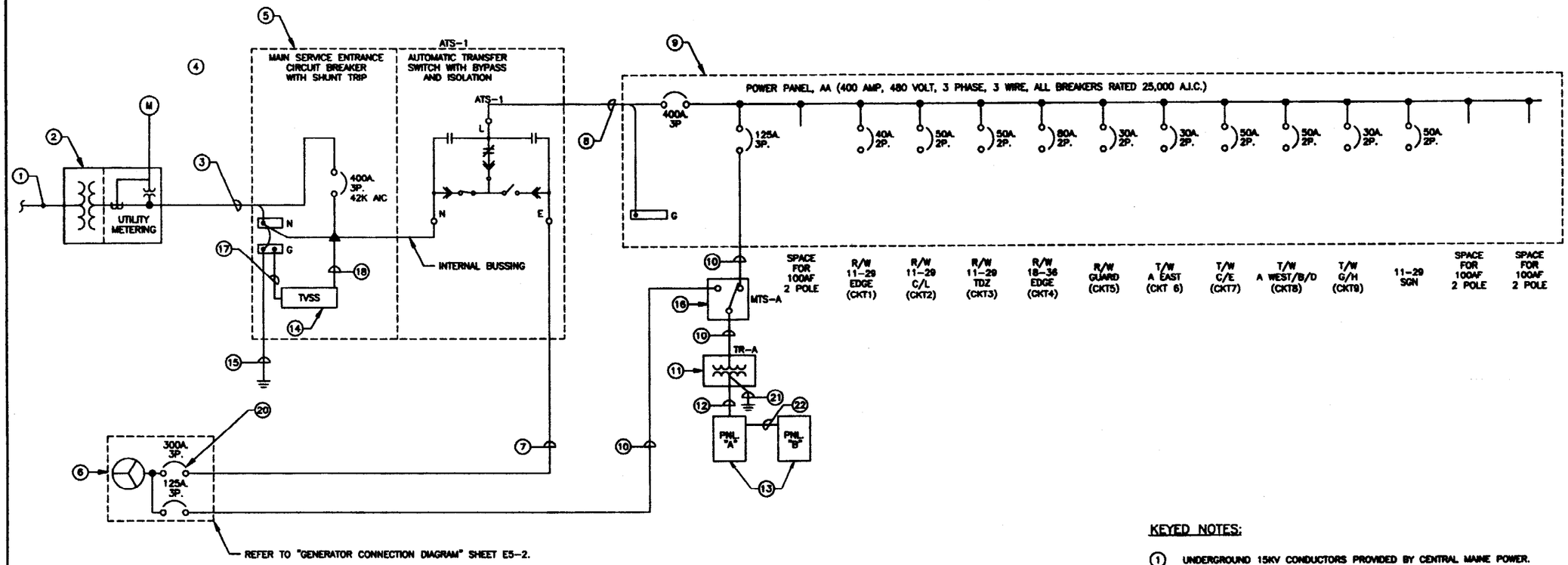

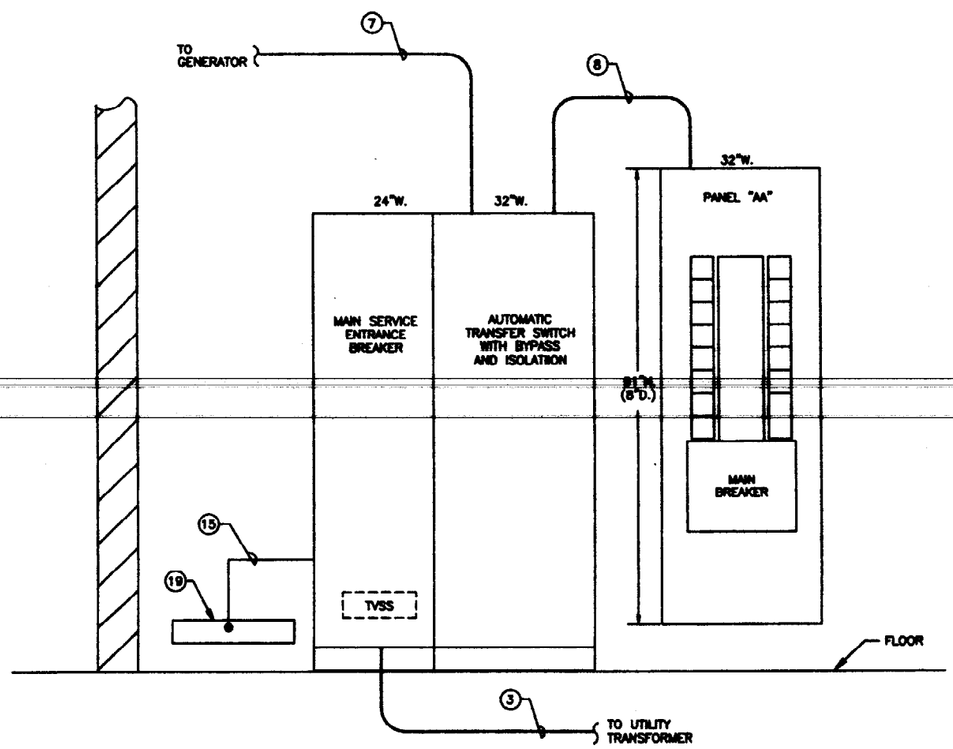

POWER DISRIBUTION ELEVATION

SCALE: 3/4"=1'-0"

KEYED NOTES:

1. UNDERGROUND 15KV CONDUCTORS PROVIDED BY CENTRAL MAINE POWER.
2. CENTRAL MAINE POWER TRANSFORMER WITH CT'S AND PT'S.
3. SERVICE ENTRANCE CONDUCTORS. ONE – 4" PVC SCHEDULE 80 CONDUIT WITH 4 #500KCMIL CONDUCTORS AND #1/0 COPPER GROUND.
4. UTILITY METER TO BE INSTALLED IN ACCORDANCE WITH CENTRAL MAINE POWER METERING CONSTRUCTION STANDARDS. PROVIDE METERING PEDESTAL/SOCKET OR STRUCTURE AND SOCKET TO MEET CMP SPEC.
5. 480 VOLT, 400 AMP, 3 POLE AUTOMATIC TRANSFER SWITCH WITH BYPASS ISOLATION AND MAIN SERVICE ENTRANCE CIRCUIT BREAKER. REFER TO SPEC. SECTION 16486 FOR REQUIREMENTS OF MAIN BREAKER. PROVIDE HINGED DOORS ON MAIN CIRCUIT BREAKER AND ATS SECTIONS
6. 210KW, 480 VOLT, 3 PHASE PRIME POWER DIESEL ENGINE GENERATOR. REFER TO SPEC. SECTION 16621.
7. 3 1/2" RIGID GALVANIZED STEEL CONDUIT WITH 3 #500KCMIL CONDUCTORS AND 1 #2 COPPER GROUND.
8. 4" RIGID GALVANIZED STEEL CONDUIT WITH 3 #500KCMIL CONDUCTORS AND 1 #1/0 COPPER GROUND.
9. POWER DISTRIBUTION PANEL 'AA'. 400AMP, 480 VOLT 3 PHASE, 3 WIRE. SQUARE D MODEL HCM WITH 400AMP MAIN BREAKER AND 81 INCHES OF TOTAL BREAKER MOUNTING SPACES.
10. 2" RIGID GALVANIZED STEEL CONDUIT WITH 3 #1/0 CONDUCTORS AND 1 #6 GROUND.
11. 75 KVA, 3 PHASE, 480 VOLT DELTA PRIMARY, 208Y/120 VOLT SECONDARY DRY TYPE TRANSFORMER.
12. 2 1/2" RIGID STEEL CONDUIT WITH 4 #250KCMIL CONDUCTORS AND 1 #2 GROUND. THESE CONDUCTORS SHALL NOT EXCEED 10'-0" IN LENGTH.
13. REFER TO PANEL SCHEDULES ON SHEET E1-3.
14. TRANSIENT VOLTAGE SURGE SUPPRESSOR. TVSS. SEE SPECIFICATION SEC. 16671.
15. #1/0 INSULATED COPPER GROUNDING ELECTRODE CONDUCTOR. CONNECT TO MASTER GROUND BUS.
16. 200 AMP, 600 VOLT, 3 POLE, MANUALLY ACTUATED MOTOR OPERATED TRANSFER SWITCH. SWITCH TO BE NEMA 1, WALL MOUNTED WITH NAMPLATE TO READ, "MANUAL TRANSFER SWITCH FOR PANEL 'A'."
17. #3 INSULATED COPPER GROUND CONDUCTOR, MINIMUM SIZE.
18. 4 #3 CONDUCTORS, MINIMUM SIZE.
19. MASTER GROUND BUS. SEE SHEET E2-1 FOR SIZE.
20. REFER TO SPEC. SECTION 16621 FOR FEATURES REQUIRED.
21. 3/4" PVC CONDUIT WITH #2 INSULATED COPPER GROUNDING ELECTRODE CONDUCTOR TO MASTER GROUND BUS.
22. REFER TO PANEL SCHEDULE A, SHEET E1-3.

DeLuco-Hoffman Associates, Inc.
Consulting Engineers
770 Main Street
South Portland, Maine 04106
207-775-1121

HNTB
HNTB CORPORATION
330 Passaic Avenue
Fairfield, New Jersey 07004
(973) 227-6460

LIN ASSOCIATES, INC.
CONSULTING ENGINEERS
BOSTON, MA (617)868-4218

KEY MAP

DATE	REVISION

PORTLAND INTERNATIONAL JETPORT
CITY OF PORTLAND
PORTLAND, MAINE

AIRFIELD LIGHTING VAULT

ONE-LINE DIAGRAM AND ELEVATIONS

SCALE: None	DATE: 5/20/03
FILE NO.: E1-2	HNTB JOB NO. 27360
	SHEET
	E1-2

PANEL SCHEDULE

DESIGNATION:	PANEL "A"	MAINS:	225 AMP MAIN CIRCUIT BREAKER
LOCATION:	REGULATOR ROOM 195	BUS SIZE	225 AMP
VOLTAGE:	208Y/120 VOLT	PANEL MOUNTING:	SURFACE
PHASE:	3 PHASE, 4 WIRE WITH GROUND BUS	ALL BREAKERS:	22,000 A.I.C. (MINIMUM)

CKT. NO.	LOAD DESCRIPTION	*	KVA	CKT. BKR. AMPS	CKT. BKR. POLE	KVA A	KVA B	KVA C	CKT. BKR. AMPS	CKT. BKR. POLE	KVA	*	LOAD DESCRIPTION	CKT. NO.
1	PANEL 'B'	7	4.32	100	3	5.76			20	1	1.44	1	LIGHTING RM 195	2
3	—		4.74	--	—		6.00		20	1	1.18	1	LIGHTING RM 192, 198, 199	4
5	—		5.00	--	—			6.00	20	1	1.36	1	LIGHTING RM 193, 194	6
7	BMS CONTROL PANEL	1	0.50	20	1	1.00			20	1	1.20	1	LIGHTING & RECEPT. BATH	8
9	BMS MOTORS	1	1.00	20	1		1.00		20	1			SPARE	10
11	SPARE			20	1			0.00	20	1	0.90	1	RECEPT. OFFICE	12
13	SPARE			20	1	1.62			20	1	1.62	1	RECEPT. RMS 195, 198, 199	14
15	SPARE			20	1		0.00		20	1			SPARE	16
17	SPARE			20	1			0.54	20	1	0.54	1	EXT. RECEPT. NORTH	18
19	SPARE			20	1	0.18			20	1	0.18	1	EXT. RECEPT. SOUTH	20
21	BOILER CONTROL PANEL	1	0.50	20	1		1.40		20	1	0.90	1	RECEPT. 193, 194	22
23	SPARE			20	1			0.54	20	1	0.54	1	RECEPT. 193	24
25	DAY TANK CONTROLS	4	2.10	30	1	0.30			20	1	0.20	1	BATTERY CHARGER	26
27	UNIT HEATERS	1	0.00	20	1		2.00		30	2	2.00	4	ENGINE COOLANT HEATER	28
29	SPARE			20	1			2.00	--	--	2.00		—	30
31	SPARE			20	1	2.00			40	3	2.00	5	AIR COMPRESSOR 7.5HP	32
33	SPARE			20	1		2.00		--	--	2.00		—	34
35	GENERATOR DAMPER PANEL	1	0.50	20	1			3.40	--	--	2.00		—	36
37	TELEPHONE RECEPTACLE	1	0.10	20	1	1.70			20	1	1.00	1	SEWAGE SUMP PUMP	38
39	GARAGE DOOR OPENER	1	1.10	20	1		1.40		20	1	0.30	1	EXTERIOR LIGHTING	40
41	FIRE ALARM PANEL	1	0.30	20	1			1.70	20	1	1.40	1	EXTERIOR LIGHTING	42
	TOTAL CONNECTED LOAD:					18.34	15.40	16.84	TOTAL =		47.78	KVA		

* ONE (1) OR TWO (2) DIGIT NUMBERS REFER TO PANELBOARD BRANCH CIRCUIT CONDUIT AND CABLE SCHEDULE ON THIS SHEET.
NOTE: PROVIDE HUNGED TRIM ON PANELBOARD

PANEL SCHEDULE

DESIGNATION:	PANEL "B"	MAINS:	100 AMP MAIN LUG ONLY
LOCATION:	REGULATOR ROOM 195	BUS SIZE	100 AMP MAIN LUG ONLY
VOLTAGE:	208Y/120 VOLT	PANEL MOUNTING:	SURFACE
PHASE:	3 PHASE, 4 WIRE WITH GROUND BUS	ALL BREAKERS:	22,000 A.I.C. (MINIMUM)

CKT. NO.	LOAD DESCRIPTION	*	KVA	CKT. BKR. AMPS	CKT. BKR. POLE	KVA A	KVA B	KVA C	CKT. BKR. AMPS	CKT. BKR. POLE	KVA	*	LOAD DESCRIPTION	CKT. NO.
1	RAC-1 (ROOF)	4	1.40	30	2	1.40			20	1			SPARE	2
3	—		1.40	--	—		1.40		20	1			SPARE	4
5	EF-1	1	0.50	20	2			2.00	30	2	2.00		FUTURE LAHISTO	6
7	—		0.50	--	—	2.00			--	—	2.00		—	8
9	EF-2	1	0.92	20	2		2.00		30	2	2.00		FUTURE LAHISTO	10
11	—		0.92	--	—			2.00	--	—	2.00		—	12
13	EF-3	1	0.42	20	2	0.42			20	1			SPARE	14
15	—		0.42	--	—		0.42		20	1			SPARE	16
17	ROOF RECEPTACLE	1	0.18	20	1			0.18	20	1			SPARE	18
19	SPARE			20	1	0.00			20	1			SPARE	20
21	SPARE			20	1		0.00		20	1			SPARE	22
23	SPARE			20	1			0.00	20	1			SPARE	24
25	SPARE			20	1	0.00			20	1			SPARE	26
27	SPARE			20	1		0.00		20	1			SPARE	28
29	SPARE			20	1			0.00	20	1			SPARE	30
	TOTAL CONNECTED LOAD:					4.32	4.74	5.00	TOTAL =		14.06	KVA		

* ONE (1) OR TWO (2) DIGIT NUMBERS REFER TO PANELBOARD BRANCH CIRCUIT CONDUIT AND CABLE SCHEDULE ON THIS SHEET.
NOTE: PROVIDE HUNGED TRIM ON PANELBOARD

BRANCH CIRCUIT CONDUIT AND CABLE SCHEDULE

NO.	CONDUIT	CONDUCTORS
1	3/4"	2 #12 CONDUCTORS AND 1 #12 GROUND.
2	3/4"	3 #12 CONDUCTORS AND 1 #12 GROUND.
3	3/4"	4 #12 CONDUCTORS AND 1 #12 GROUND.
4	3/4"	2 #10 CONDUCTORS AND 1 #10 GROUND.
5	1"	3 #8 CONDUCTORS AND 1 #10 GROUND.
6	3/4"	3 #10 CONDUCTORS AND 1 #10 GROUND.
7	1 1/4"	4 #3 CONDUCTORS AND 1 #8 GROUND.

LIGHT FIXTURE SCHEDULE

TYPE	MANUFACTURER	CATALOG NUMBER	VOLTAGE	DESCRIPTION
A2	METALUX LIGHTOLIER DAY-BRITE	2PCX-340-120-TEB82 DPS2924PP340-120 2P49A332-48SL-120-1/21-EB	120 V.	2' X 4' RECESSED FLUORESCENT TROFFER WITH TWO ELECTRONIC OCTRON BALLASTS. BALLASTS HAVE LESS THAN 10% THD. CENTER LAMP SWITCHED SEPARATELY FROM OUTSIDE LAMPS. 24 DEEP CELL LOUVER WITH LOW IRIDESCENCE, SPECULAR ANODIZED ALUMINUM REFLECTOR. FIXTURE DESIGNED FOR USE WITH VIDEO DISPLAY TERMINALS, (VDT'S). 3-F32T8/SP41/RAPID START LAMPS.
C1	METALUX LIGHTOLIER DAY-BRITE	OIM-232-120-TEB81-CEP TFA232RS-120-SO 1F-232-PP-120-1/2-EB-FL5	120 V.	4' HEAVY DUTY INDUSTRIAL FLUORESCENT PROVIDE WITH ELECTRONIC OCTRON BALLAST WITH LESS THAN 10% THD. WITH END PLATES; 15 – 20% UPLIGHT 2-F32T8/SP41/RS LAMPS
C1E	METALUX LIGHTOLIER DAY-BRITE	OIM-232-120-TEB81-EL4-CEP TFA232RS-120-SO-EM 1F-232-PP-120-1EB8-FL5-E5	120 V.	4' HEAVY DUTY INDUSTRIAL FLUORESCENT WITH END PLATES PROVIDE WITH ELECTRONIC OCTRON BALLAST WITH LESS THAN 10% THD. PROVIDE TWO LAMP EMERGENCY BALLAST; BODINE MODEL B50 OR EQUAL. FIXTURE PROVIDES 15 – 20% UPLIGHT. 2-F32T8/SP41/RS LAMPS
D1	METALUX LIGHTOLIER DAY-BRITE	DCIM-232-120-TEB81-CEP TFS232RS-120-SO 1F-232-PPS-120-1/2-EB-FL5	120 V.	4' HEAVY DUTY INDUSTRIAL FLUORESCENT PROVIDE WITH ELECTRONIC OCTRON BALLAST WITH LESS THAN 10% THD. WITH END PLATES; FIXTURE HAS SOLID TOP REFLECTOR. 2-F32T8/SP41/RS LAMPS
D1E	METALUX LIGHTOLIER DAY-BRITE	DCIM-232-120-TEB81-EL4-CEP TFS232RS-120-SO-EM 1F-232-PPS-120-1EB8-FL5-E5	120 V.	4' HEAVY DUTY INDUSTRIAL FLUORESCENT WITH END PLATES PROVIDE WITH ELECTRONIC OCTRON BALLAST WITH LESS THAN 10% THD. PROVIDE TWO LAMP EMERGENCY BALLAST; BODINE MODEL B50 OR EQUAL. FIXTURE HAS SOLID TOP REFLECTOR. 2-F32T8/SP41/RS LAMPS
E	SURE-LITES BIG BEAM EMERGI-LITE	CAX-7-X-70-00-G EDRL-X-G-A-8 LEDP-XL-1/2-G-120	120 V.	EXIT LIGHT FIXTURE WITH INTEGRAL SEALED NICKEL CADMIUM BATTERY. DIE CAST ALUMINUM HOUSING AND ONE OR TWO LED FACE PLATES AS REQUIRED. PROVIDE WITH MOUNTING TO ATTACH TO WALL.
G	METALUX LIGHTOLIER DAY-BRITE	BIU-232-120-EB81 CWBC232-120-SO CB-232-W-120-1/2EB	120 V.	4' WALL MOUNTED FLUORESCENT; UP & DOWN LIGHT PROVIDE WITH ELECTRONIC OCTRON BALLAST PRISMATIC ACRYLIC DIFFUSER 2-F32T8/SP41/RS LAMPS
K	HALO LIGHTOLIER CAPRI LIGHTING	H-7RT-71PS 1102P1/117BSH R10X-SH-16	120 V.	RECESSED SHOWER LIGHT FIXTURE PROVIDE WITH FRAME-IN KIT AND WHITE TRIM RING UL LISTED FOR WET LOCATION 1-60 WATT A/19 LAMP
N	LUMARK QUALITY LIGHTING EXCELINE	HPWL-70-120V NW11-3-HPS-70-N-120-DBZ 313170NLXL-1-120	120 V.	EXTERIOR H.I.D. WALLPACK WITH VISOR. DARK BRONZE POLYESTER POWER COAT FINISH. DIE-CAST ALUMINUM HOUSING & POLYCARBONATE REFRACTOR 1-70 WATT HIGH PRESSURE SODIUM LAMP
P	LUMARK QUALITY LIGHTING EXCELINE	HPWL-150-120V NW11-3-HPS-150-N-120-DBZ 313150NLXL-1-120	120 V.	EXTERIOR H.I.D. WALLPACK WITH VISOR DARK BRONZE POLYESTER POWER COAT FINISH. DIE-CAST ALUMINUM HOUSING & POLYCARBONATE REFRACTOR 1-150 WATT HIGH PRESSURE SODIUM LAMP

DeLuca-Hoffman Associates, Inc.
Consulting Engineers
778 Main Street
South Portland, Maine 04106
207-775-1121

HNTB
HNTB CORPORATION
330 Passaic Avenue
Fairfield, New Jersey 07004
(973) 227-6460

LIN ASSOCIATES, INC.
CONSULTING ENGINEERS
BOSTON, MA (617)868-4216

KEY MAP

DATE	REVISION

PORTLAND INTERNATIONAL JETPORT
CITY OF PORTLAND
PORTLAND, MAINE

AIRFIELD LIGHTING VAULT

PANEL SCHEDULES

SCALE: None	DATE: 5/20/03
FILE NO.: E1-3	HNTB JOB NO. 27380

SHEET

E1-3

GENERAL NOTES:

1. REFER TO SHEET E1-2 FOR EQUIPMENT RATINGS.
2. REFER TO SHEET E1-2 FOR POWER WIRING CONDUIT AND CABLE REQUIREMENTS NOT INDICATED ON THIS SHEET.
3. REFER TO SHEET E5-1 FOR CONDUIT DUCTBANK DETAILS.
4. REFER TO SITE PLAN FOR CONTINUATION OF CONDUITS OUTSIDE OF AIRFIELD LIGHTING VAULT.
5. ALL GROUNDING ELECTRODE CONDUCTOR CONNECTIONS SHALL BE MADE IN BOXES FOR INSPECTION.
6. REFER TO SHEET E4-1 FOR CONTROL WIRE AND CONDUIT.

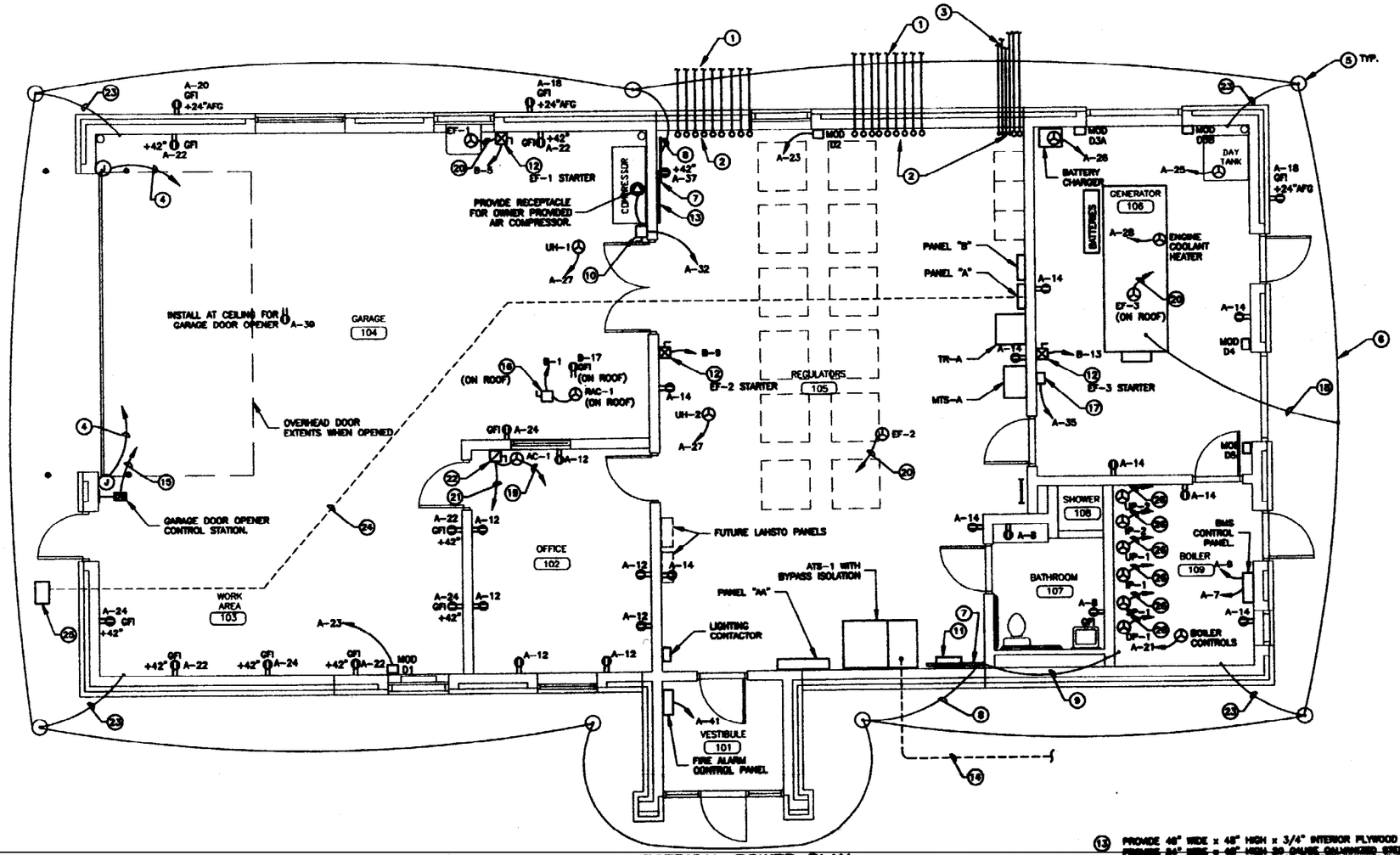

ELECTRICAL POWER PLAN

KEYED NOTES:

1. 9 – 3" RGS CONDUITS FOR AIRFIELD LIGHTING CIRCUITS. EXTEND CONDUITS TO MANHOLE A1. ALL CONDUITS TO BE ENCASED IN CONCRETE.
2. EXTEND CONDUITS 6" AFF AND CAP.
3. 4 – 2" RGS CONDUITS AND 2 – 4" RGS CONDUIT FOR COMMUNICATIONS. EXTEND CONDUITS TO MANHOLE 'MH-C1'. CONCRETE ENCASE ALL CONDUITS.
4. SINGLE GANG BOX WITH COVER PLATE WITH 0.64" HOLE. PROVIDE 1/2" CONDUIT FROM BOX TO GARAGE DOOR OPENER WITH CABLE AS REQUIRED BY DOOR OPENER FOR PHOTO ELECTRIC SENSORS.
5. GROUND ROD. SEE DETAIL ON SHEET E5-1.
6. #3/0 STRANDED BARE COPPER GROUND INSTALLED 36" BELOW FINISH GRADE.
7. MASTER GROUND BUS. 1/4" x 4" x 24" SOLID COPPER. INSTALL ON 2" HIGH SUPPORT SPACERS FROM WALL. INSTALL 6" AFF.
8. #3/0 STRANDED BARE COPPER GROUNDING ELECTRODE CONDUCTOR. INSTALL THROUGH WALL IN 1" SCHEDULE 40 PVC CONDUIT. CONNECT TO MASTER GROUND BUS.
9. 1" SCHEDULE 40 PVC CONDUIT WITH #3/0 INSULATED COPPER GROUND CONDUCTOR. CONNECT TO BUILDING WATER SUPPLY PIPE IN BOILER ROOM.
10. HEAVY DUTY, NEMA 1, NON-FUSIBLE SAFETY SWITCH. 30 AMP, 3 POLE, 600 VAC.
11. TRANSIENT VOLTAGE SURGE SUPPRESSOR. TVSS.
12. FULL VOLTAGE NON-REVERSING COMBINATION MOTOR STARTER WITH NON-FUSIBLE DISCONNECT SWITCH, 3 POLE, 600 VOLT, NEMA SIZE 1. REFER TO CONTROL DIAGRAMS ON SHEET E5-3 FOR ACCESSORIES AND CONTROL WIRE REQUIRED BETWEEN STARTER AND BMS CONTROL PANEL AND DAMPERS.
13. PROVIDE 48" WIDE x 48" HIGH x 3/4" INTERIOR PLYWOOD BACKBOARD ON WALL. ~~PROVIDE 24" WIDE x 48" HIGH 20 GAUGE GALVANIZED STEEL BLADE MOUNTED TO PLYWOOD. [illegible] WITH DRY INSULATION~~ COPPER BRAIDED GROUND WIRE.
14. ~~GARAGE GARAGE CONDUITS INSTALLED UNDERGROUND.~~
15. 3/4" CONDUIT WITH GARAGE DOOR OPENER CONTROL WIRES TO GARAGE DOOR OPENER.
16. HEAVY DUTY NEMA 4X STAINLESS STEEL, NON-FUSIBLE SAFETY SWITCH. 30 AMP, 3 POLE, 600 VOLT A.C.
17. GENERATOR DAMPER CONTROL PANEL. REFER TO SHEET E5-3 FOR WIRING DIAGRAM AND COMPONENTS. PROVIDE CONDUIT AND WIRE FROM CONTROL PANEL TO DAMPER MOTORS AS INDICATED ON WIRING DIAGRAMS.
18. 1" SCHEDULE 40 PVC CONDUIT WITH #3/0 INSULATED COPPER GROUND CONDUCTOR. CONNECT TO GENERATOR GROUND TERMINAL.
19. 1" CONDUIT FOR CONTROL CABLE TO RAC-1.
20. 3/4" CONDUIT WITH 4 #12 CONDUCTORS AND 1 #12 GROUND TO ASSOCIATED STARTER. 2 CONDUCTORS FOR FAN MOTOR, 2 CONDUCTORS FOR DAMPER.
21. 3/4" CONDUIT WITH 3 #10 CONDUCTORS AND 1 #10 GROUND TO RAC-1 ON ROOF FOR POWER.
22. FLUSH MOUNTED MANUAL MOTOR STARTER. 3 POLE, 600 VOLT, TOGGLE SWITCH OPERATOR WITH STAINLESS STEEL FACEPLATE. SQUARE D CLASS 2510 TYPE K OR EQUAL.
23. #3/0 INSULATED GROUND CONDUCTOR IN 1" PVC CONDUIT. CONNECT TO ROOF STEEL JOIST AND DECKING.
24. 2 – 1" CONDUITS UNDER SLAB. STUB UP BENEATH PANEL 'A' AND CAP.
25. 11" X 18" X 12" DEEP HANDHOLE. OPEN BOTTOM QUAZITE COMPOSOLITE TYPE PC BOX WITH HEAVY DUTY COVER, 15,000# DESIGN LOAD. COVER LOGO TO READ "ELECTRIC".
26. 1/2" CONDUIT WITH 2 #14 CONDUCTORS AND 1 #14 GROUND TO BMS CONTROL PANEL.

DeLuca-Hoffman Associates, Inc.
Consulting Engineers
778 Main Street
South Portland, Maine 04106
207-775-1121

HNTB
HNTB CORPORATION
330 Passaic Avenue
Fairfield, New Jersey 07004
(973) 227-6460

LIN ASSOCIATES, INC.
CONSULTING ENGINEERS
BOSTON, MA (617)566-4218

KEY MAP

DATE	REVISION

PORTLAND INTERNATIONAL JETPORT
CITY OF PORTLAND
PORTLAND, MAINE

AIRFIELD LIGHTING VAULT

POWER AND GROUNDING PLAN

SCALE: 1/4" = 1'-0"	DATE: 10/31/2002
FILE NO.: E2-1	HNTB JOB NO. 27360

STATE OF MAINE
MARK W. MILLS
No. 7174
REGISTERED PROFESSIONAL ENGINEER

SHEET
E2-1

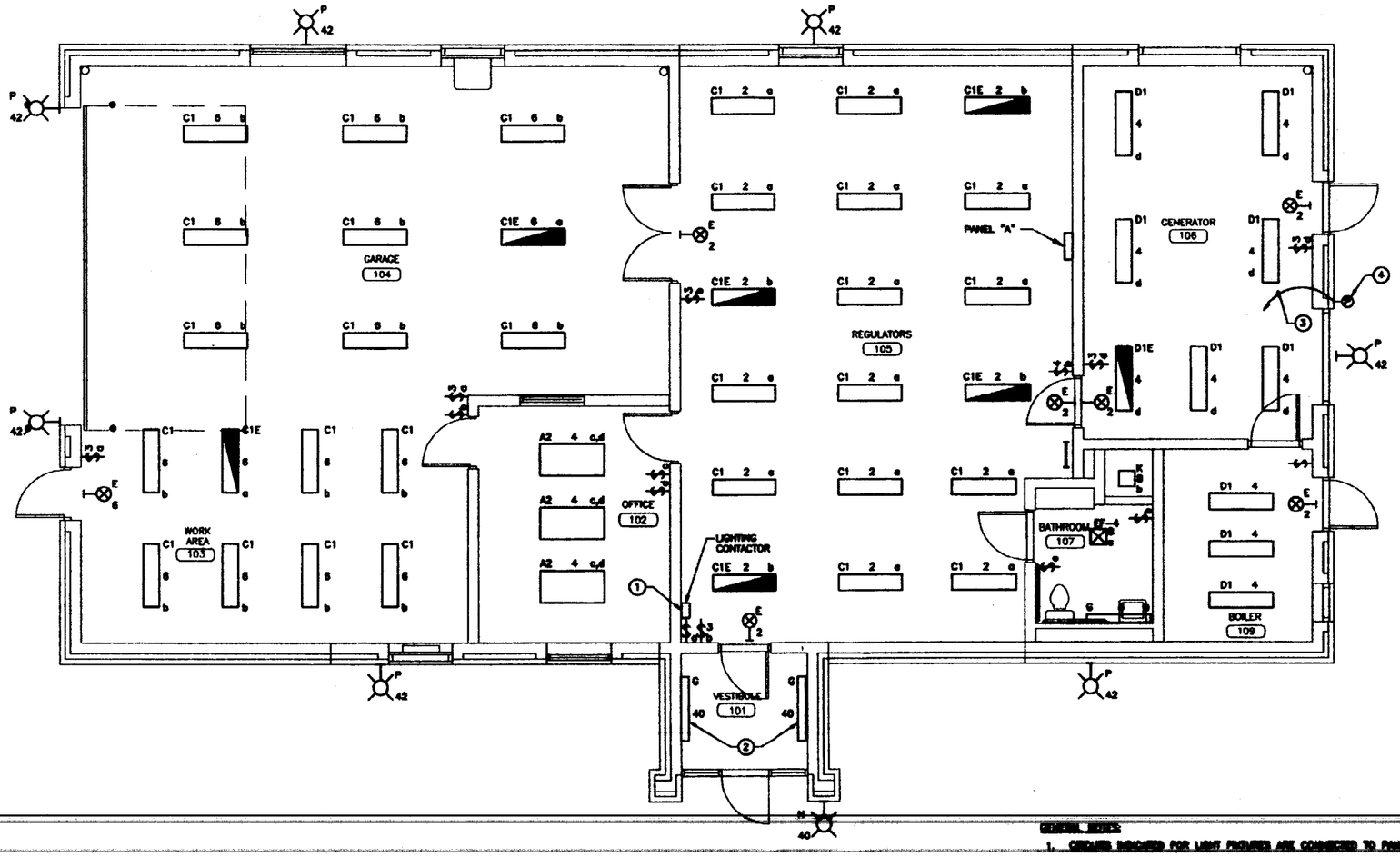

LIGHTING PLAN

GENERAL NOTES:

1. CIRCUITS INDICATED FOR LIGHT FIXTURES ARE CONNECTED TO PANEL "A".
2. MOUNT ALL INDUSTRIAL FLUORESCENT FIXTURES AT 10' AFF. SEE DETAIL SHEET E3-2.
3. ALL EXTERIOR FIXTURES AND THE VESTIBULE (ROOM 101) FIXTURES SHALL BE CONTROLLED VIA THE LIGHTING CONTROL CONTACTOR AND REMOTE MOUNTED PHOTOCELL.
4. REFER TO SHEET E1-3 FOR LIGHT FIXTURE SCHEDULE.
5. FIXTURES IN OFFICE 102 SHALL HAVE TWO (2) LEVEL SWITCHING. SWITCH "c" SHALL TURN ON CENTER LAMP OF EACH FIXTURE. SWITCH "d" WILL TURN ON OUTSIDE LAMPS OF EACH FIXTURE.

KEYED NOTES:

1. LIGHTING CONTROL CONTACTOR WITH PHOTOCELL CONTROL. SEE ELECTRICAL DETAILS ON SHEET E3-1.
2. INSTALL LIGHT FIXTURE 1'-0" BELOW PAINTED TRIM PIECE WHERE THE CEILING MEETS THE WALL IN VESTIBULE. FIXTURES ARE CONTROLLED BY LIGHTING CONTACTOR.
3. 3/4" CONDUIT WITH 2 #14 CONTROL WIRES AND 1 #14 GROUND TO LIGHTING CONTROL CONTACTOR.
4. PHOTOCELL MOUNTED 1' - 0" BELOW TOP OF PARAPET.

DeLuco-Hoffman Associates, Inc.
Consulting Engineers
770 Main Street
South Portland, Maine 04106
207-775-1121

HNTB
HNTB CORPORATION
330 Passaic Avenue
Fairfield, New Jersey 07004
(973) 227-6460

LIN ASSOCIATES, INC.
CONSULTING ENGINEERS
BOSTON, MA (617)868-4219

KEY MAP

DATE	REVISION

PORTLAND INTERNATIONAL JETPORT
CITY OF PORTLAND
PORTLAND, MAINE

AIRFIELD LIGHTING VAULT

LIGHTING PLAN

SCALE: 1/4" = 1'-0" | DATE: 5/20/03
FILE NO.: E3-1 | HNTB JOB NO. 27380

HARRY B. STEWART REGISTERED PROFESSIONAL ENGINEER

SHEET

E3-1

FIRE ALARM ZONES	
ZONE	AREA
1	ROOMS 103, 104
2	ROOM 102
3	ROOM 105
4	ROOMS 106, 109

GENERAL NOTES:

1. PROVIDE ONE COMMON FIRE ALARM SIGNALLING CIRCUIT FOR ALL HORN STROBES IN THE BUILDING.
2. REFER TO MONITORING SYSTEM DIAGRAM ON SHEET E5-2 FOR CONNECTION INFORMATION.
3. ALL FIRE ALARM INITIATION AND SIGNALING CIRCUITS SHALL BE INSTALLED IN MINIMUM 3/4" CONDUIT. ALL FIRE ALARM PULL STATIONS, HORNS AND STROBES SHALL BE FLUSH MOUNTED.
4. SECURITY CONDUITS INSTALLED TO THE SECURITY CONDUIT AREA SHALL BE TURNED DOWNWARD ALONG WALL AND STOP 8 (EIGHT) FEET ABOVE FINISHED FLOOR.

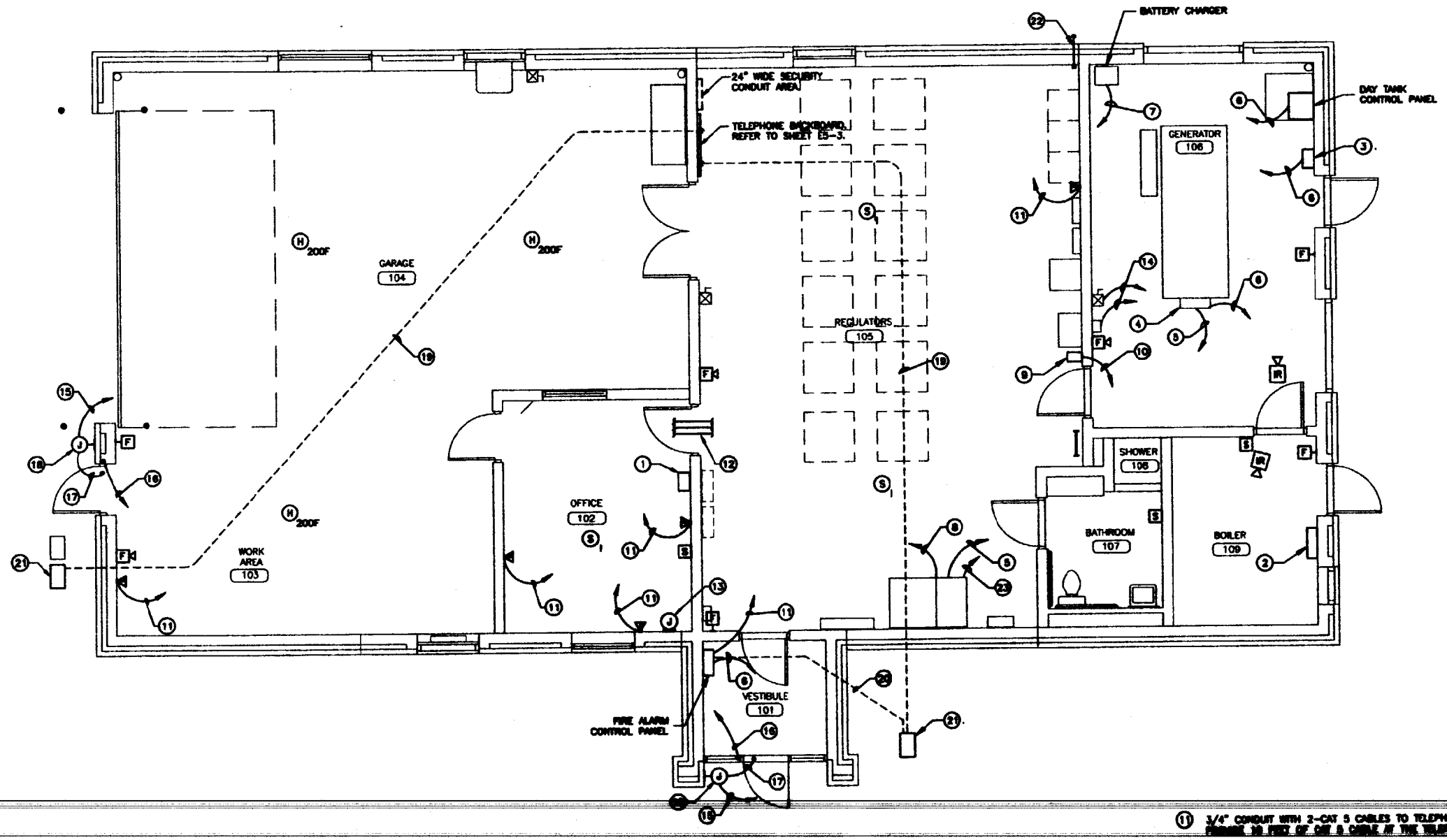

SYSTEMS PLAN

KEYED NOTES:

1. GENERATOR REMOTE ALARM ANNUNCIATOR PANEL
2. BUILDING MANAGEMENT SYSTEM (BMS) CONTROL PANEL.
3. FUEL PIPING LEAK DETECTION PANEL.
4. GENERATOR CONTROL PANEL.
5. 1 1/2" CONDUIT WITH 1-19 CONDUCTOR #18 CONTROL CABLE TO GENERATOR REMOTE ALARM ANNUNCIATOR PANEL.
6. 3/4" CONDUIT WITH 1-6 CONDUCTOR #18 CONTROL CABLE TO BMS CONTROL PANEL.
7. 3/4" CONDUIT WITH 1-6 CONDUCTOR #18 CONTROL CABLE TO GENERATOR CONTROL PANEL.
8. 1 1/2" CONDUIT WITH 1-6 CONDUCTOR #18 AND 1-2 CONDUCTOR # 18 CONTROL CABLES TO GENERATOR CONTROL PANEL. CONNECT 2 CONDUCTOR # 18 CONTROL CABLE TO GENERATOR BREAKER SHUNT TRIP.
9. GENERATOR EMERGENCY STOP PUSHBUTTON. FLUSH MOUNTED.
10. 3/4" CONDUIT WITH 3 #14 CONTROL CONDUCTORS TO THE GENERATOR CONTROL PANEL.
11. 3/4" CONDUIT WITH 2-CAT 5 CABLES TO TELEPHONE SYSTEM BACKBOARD. PROVIDE 30 FEET OF CAT 5 CABLE AT THE TELEPHONE BACKBOARD.
12. 3 - 1" CONDUITS STUBBED THROUGH WALL ABOVE OFFICE CEILING FOR FUTURE CONTROL CABLES.
13. 4" SQUARE BOX FLUSH IN WALL WITH 3/4" CONDUIT TO TELEPHONE BACKBOARD FOR ALCS COMPUTER CONNECTION.
14. 3/4" CONDUIT WITH 2 #14 CONTROL WIRES TO GENERATOR CONTROL PANEL.
15. 3/4" CONDUIT WITH PULL WIRE TO SECURITY CONDUIT AREA.
16. 1/2" CONDUIT WITH PULL WIRE INSTALLED IN DOOR JAMB TO THE ELECTRIC STRIKE. ROUTE CONDUIT TO THE SECURITY CONDUIT AREA. DO NOT COMBINE THIS CONDUIT WITH OTHER SECURITY CONDUITS.
17. 1/2" CONDUIT WITH PULL WIRE INSTALLED INTO TOP OF DOOR JAMB FOR FUTURE DOOR POSITION SWITCH.
18. 4" SQUARE BOX FLUSH MOUNTED 48" AFF IN WALL WITH STAINLESS STEEL COVER PLATE.
19. 2 - 2" CONDUITS UNDER SLAB. STUB CONDUITS UP AT TELEPHONE BACKBOARD.
20. 1" CONDUIT UNDER SLAB. CONNECT TO FIRE ALARM CONTROL PANEL.
21. 13" X 24" X 12" DEEP QUAZITE COMPOSOLITE PC STYLE BOX WITH HEAVY DUTY COVER, 15,000# DESIGN LOAD. COVER TO READ: 'COMMUNICATIONS'.
22. PROVIDE 3" RGS CONDUIT THROUGH WALL AT 10'-0" ABOVE FINISH FLOOR FOR COMMUNICATION ANTENNAS. PROVIDE THREADED ENDS AND CAP BOTH ENDS.
23. 3/4" CONDUIT WITH 8 #18 CONTROL WIRES TO BMS CONTROL PANEL.

DeLuco-Hoffman Associates, Inc.
Consulting Engineers
775 Main Street
South Portland, Maine 04106
207-799-1121

HNTB
HNTB CORPORATION
330 Passaic Avenue
Fairfield, New Jersey 07004
(973) 227-8480

LIN ASSOCIATES, INC.
CONSULTING ENGINEERS
BOSTON, MA (617)868-4218

KEY MAP

DATE	REVISION

PORTLAND INTERNATIONAL JETPORT
CITY OF PORTLAND
PORTLAND, MAINE

AIRFIELD LIGHTING VAULT

SYSTEMS PLAN

SCALE: 1/4" = 1'-0"	DATE: 5/20/03
FILE NO.: E4-1	HNTB JOB NO. 27380

SHEET

E4-1

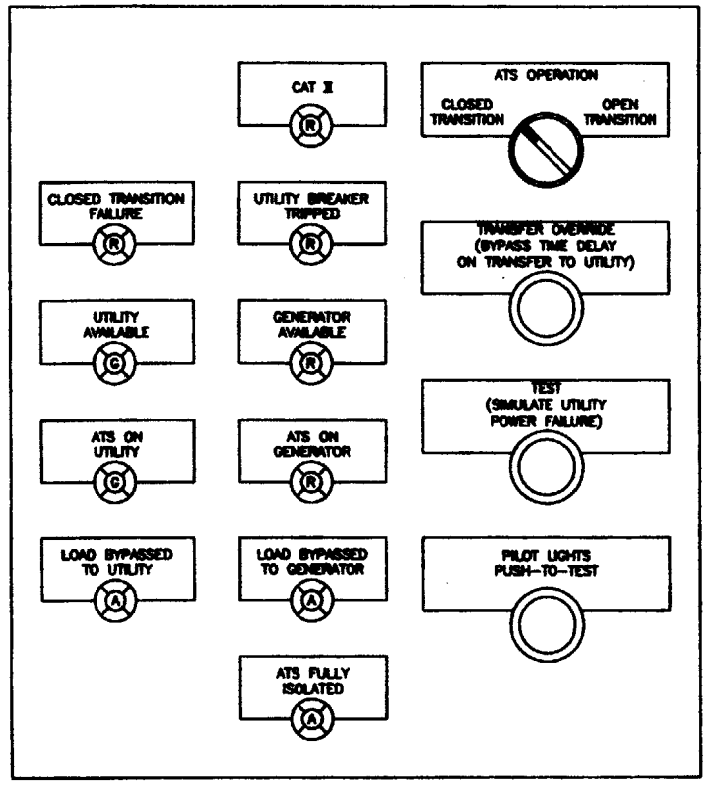

ATS INDICATORS AND CONTROL DETAIL

SCALE: NONE

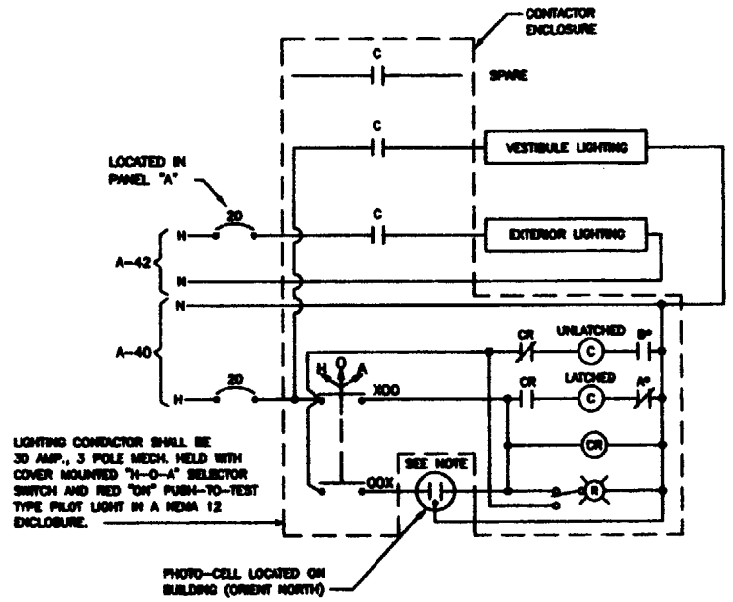

NOTES:

1. THE PHOTOELECTRICAL CELL SHALL BE SPECIFICATION GRADE WITH A GASKETED WEATHERPROOF, DIE CAST ZINC ENCLOSURE AND A 1" DIAMETER HERMETICALLY SEALED CADMIUM SULFIDE CELL. THE UNIT SHALL HAVE BUILT-IN TIME DELAY, AND EXTERNAL ADJUSTMENT OF TURN-ON TIME. IN THE EVENT OF PHOTO-CELL FAILURE, LIGHTING SHALL REMAIN ON. MOUNT PHOTO-CELL WITH CELL ORIENTED TO THE NORTH. THE UNIT SHALL BE RATED 120 VOLT. MANUFACTURER SHALL BE TORK SERIES 2100, OR EQUAL.
2. CONTACTS "AP" & "BP" ARE COIL CLEARING CONTACTS THAT ARE SUPPLIED WITH LIGHTING CONTACTOR.

EXTERIOR LIGHTING CONTROL DIAGRAM

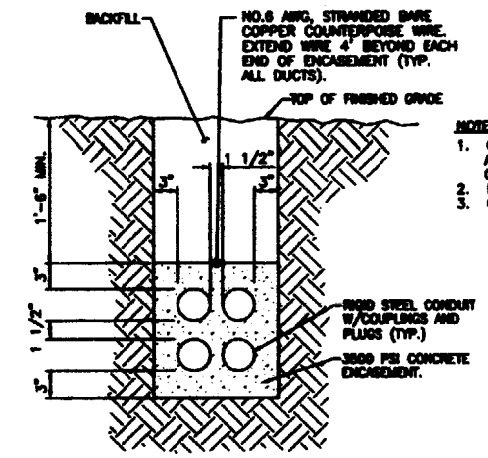

NOTES:

1. CONCRETE DIMENSIONS SHOWN ARE MINIMUMS. SEPARATION BETWEEN CONDUITS ARE SIMILAR FOR ALL DUCT SECTIONS (I.E. 1 1/2" BETWEEN DUCTS, 3" CONCRETE COVER, ETC.)
2. BACKFILL SHALL BE PER SPECIFICATION.
3. CONNECT THE COUNTERPOISE WIRE TO THE BUILDING GROUND RING.

DUCT BANK SECTIONS

NTS

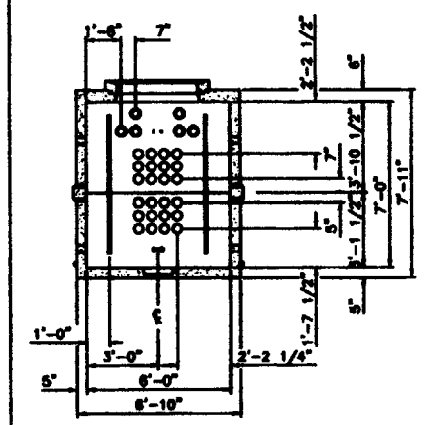

SECTION "D-D"

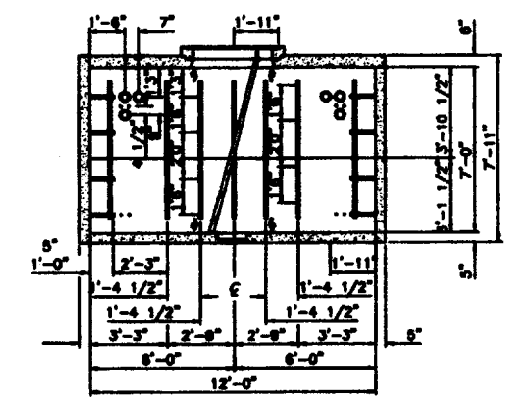

SECTION "C-C"

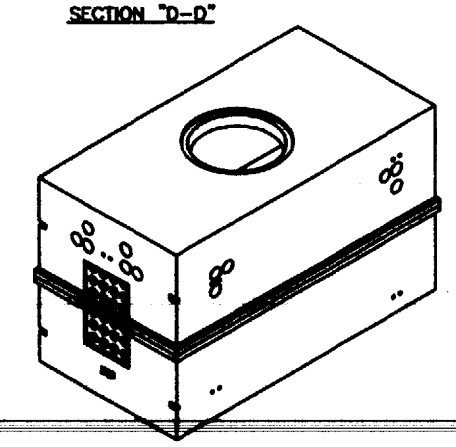

ISOMETRIC VIEW

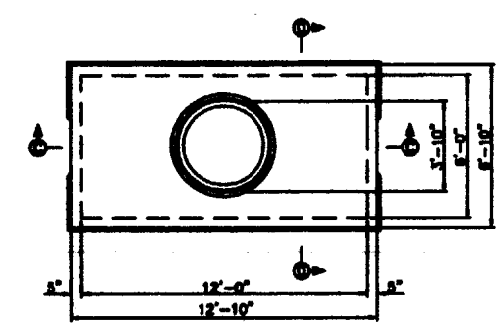

NOTE:

MANHOLE DIMENSIONS SHOWN ARE IN ACCORDANCE WITH STANDARDS FOR HARTFORD 12"X7" TYPE "A" MANHOLE OR APPROVED EQUAL.

PLAN VIEW

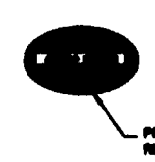

12' X 6' X 7' TYPE "A" MANHOLE

NTS

DESIGN CRITERIA:

1) DESIGN SPECIFICATIONS: ACI 318, AASHTO LOAD FACTOR DESIGN METHOD, AND ASTM C857.
2) DESIGN LOADING: AASHTO HS20 (32,000 LB/AXLE)
3) LIVE LOAD SURCHARGE: .35% OF THE WHEEL LOADING APPLIED TO 8'-0" OF DEPTH.
4) CONCRETE COMPRESSIVE STRENGTH: F'c = 4500 PSI.
5) REINFORCING STEEL: ASTM A706, Fy = 60000 PSI.

DESIGN ASSUMPTIONS:

1) GROUND WATER LEVEL: 3'-6" BELOW GRADE.
2) EARTH COVER: 2'-0" MINIMUM TO 8'-0" MAXIMUM.
3) LIVE LOAD IMPACT: 2'-0" 1 = 20%
   2'-1" TO 2'-11" 1 = 10%
   3'-0" TO 5'-0" 1 = 0%
4) COEFFICIENT OF ACTIVE EARTH PRESSURE: Ka = 0.3.
5) SPECIFIC WEIGHT OF STD. AGGREGATE CONCRETE: 150 PCF.
6) SPECIFIC WEIGHT OF DRY EARTH: 100 PCF.
7) SPECIFIC WEIGHT OF SATURATED EARTH: 120 PCF.
8) EQUIVALENT FLUID PRESSURE OF DRY EARTH: 30 PSF.
9) EQUIVALENT FLUID PRESSURE OF SATURATED EARTH: 80 PSF.

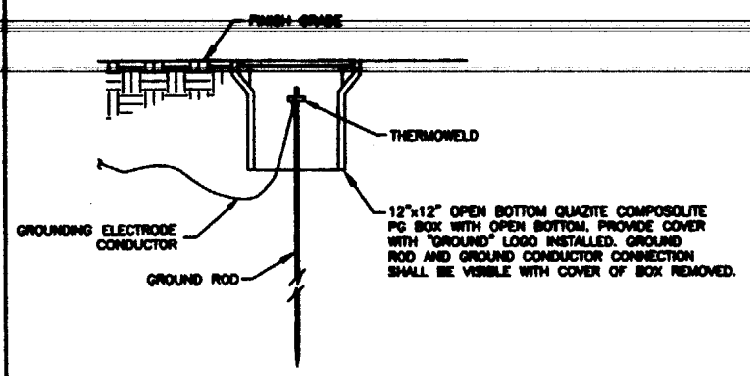

GROUND ROD INSTALLATION

NO SCALE

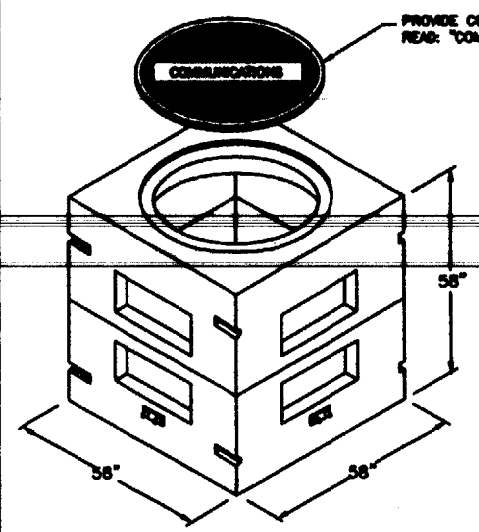

MANHOLE WITH KNOCKOUTS
CASTING NO. 10-012K

DIMENSIONS

	LENGTH IN.	WIDTH IN.	HEIGHT IN.
INSIDE	48	48	48
OUTSIDE	58	58	58
RECOMMENDED HOLE SIZE	64	64	-

	THICKNESS IN.		WEIGHT LBS.
WALL	5	TOP	3,100
ROOF	5	BOTTOM	3,650
FLOOR	5	TOTAL	6,750

NOTE:

THE MANHOLE WITH DUCT TERMINATORS SHOWN ON THIS SHEET ARE AVAILABLE FROM:
HARTFORD CONCRETE PRODUCTS INC.
1400 NORTH WABASH AVE. P.O. BOX 600
HARTFORD CITY, INDIANA 47340

TYPE "S" 4'X4'X4' MANHOLE

NTS

DeLuca-Hoffman Associates, Inc.
Consulting Engineers
778 Main Street
South Portland, Maine 04106
207-775-1121

HNTB
HNTB CORPORATION
330 Passaic Avenue
Fairfield, New Jersey 07004
(973) 227-6460

LIN ASSOCIATES, INC.
CONSULTING ENGINEERS
BOSTON, MA (617)868-4218

KEY MAP

DATE	REVISION

PORTLAND INTERNATIONAL JETPORT
CITY OF PORTLAND
PORTLAND, MAINE

AIRFIELD LIGHTING VAULT

ELECTRICAL DETAILS

SCALE: None	DATE: 5/20/03
FILE NO.: E1-2	HNTB JOB NO. 27360

SHEET

E5-1

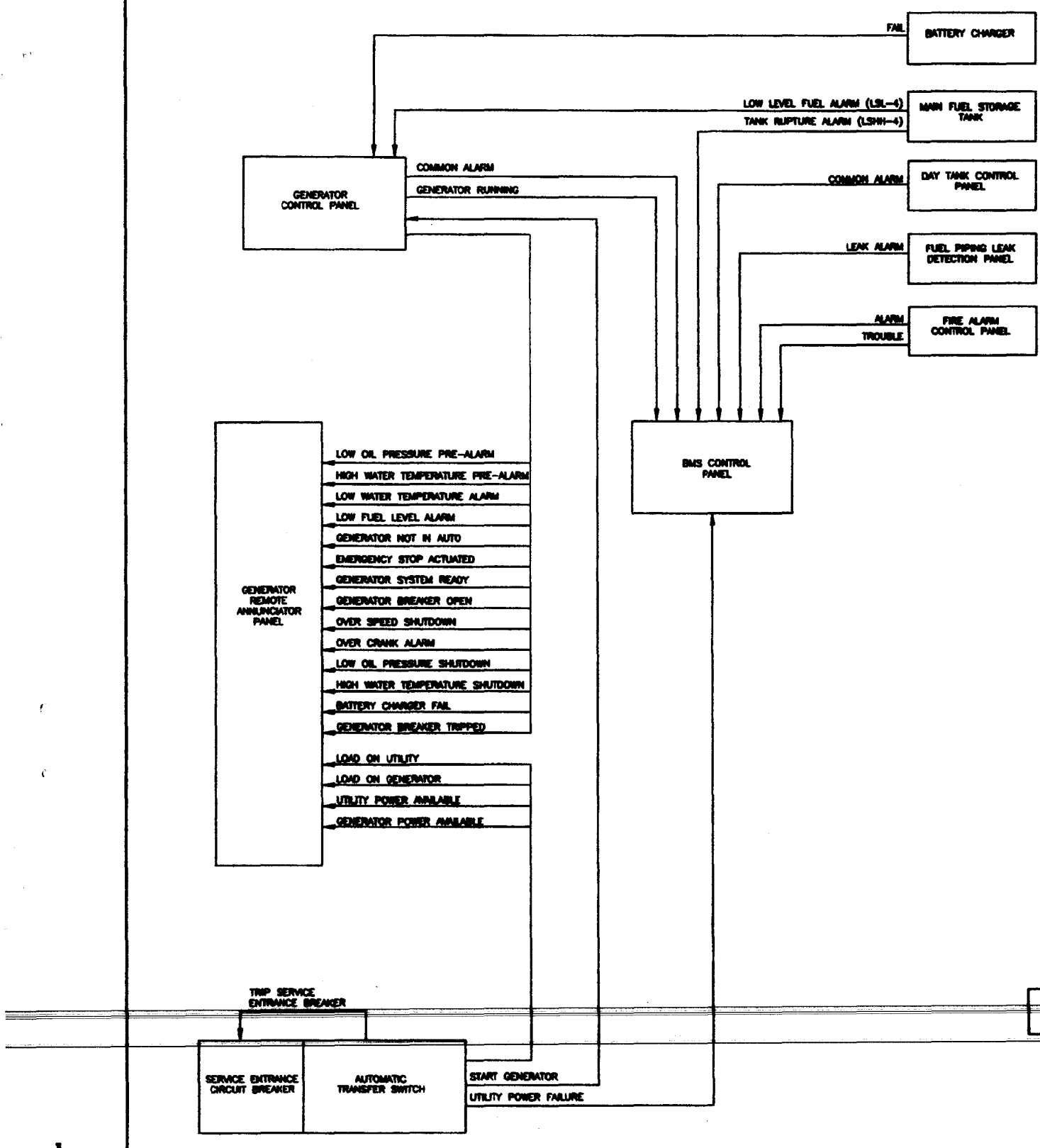

MONITORING SYSTEMS DIAGRAM

SCALE: NONE

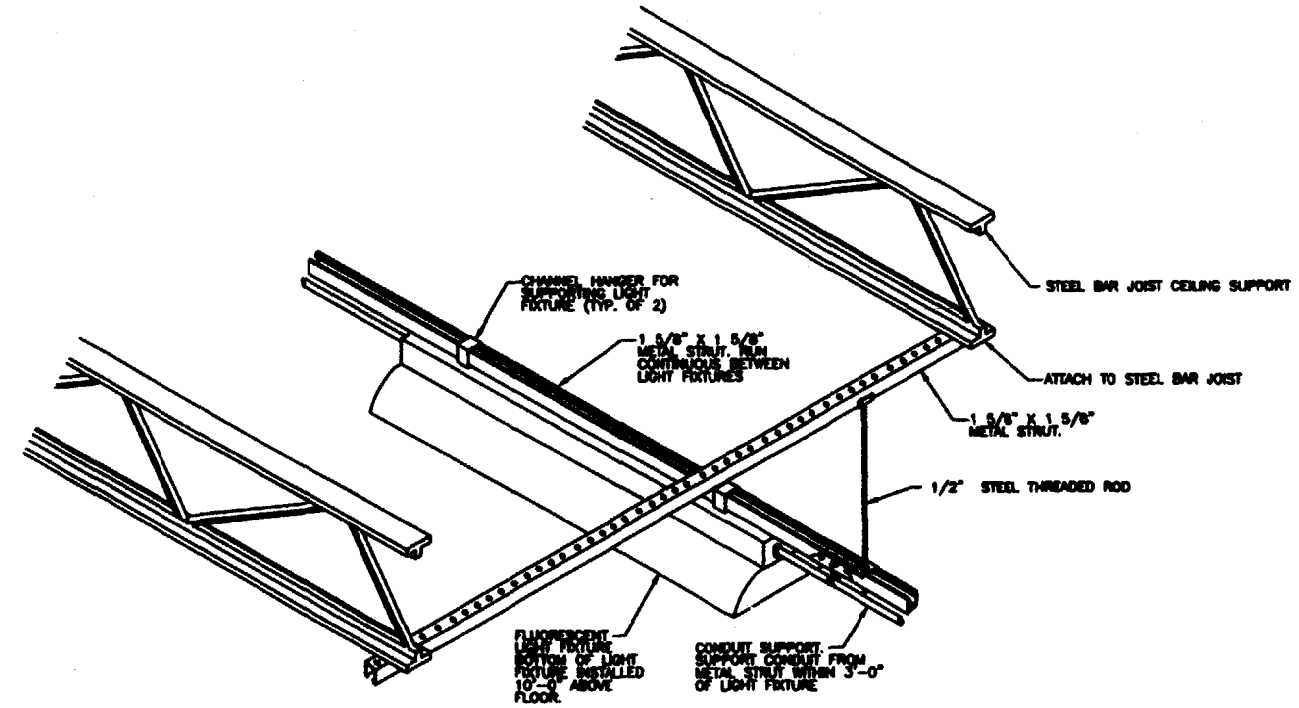

FLUORESCENT FIXTURE TYPES "C1" AND "C1E" MOUNTING DETAIL

SCALE: NONE

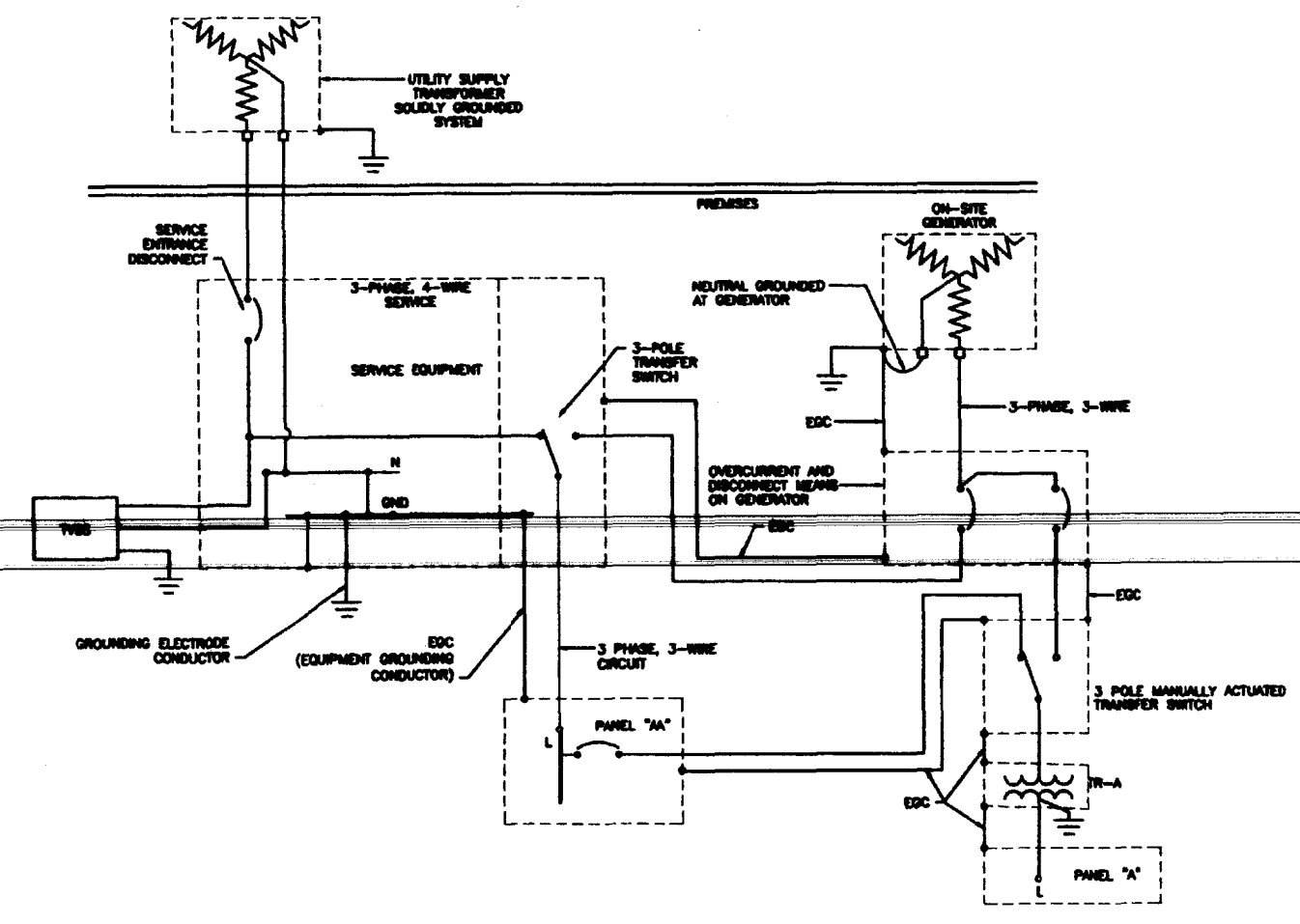

GENERATOR CONNECTION DIAGRAM

SCALE: NONE

DeLuce-Hoffman Associates, Inc.
Consulting Engineers
778 Main Street
South Portland, Maine 04106
207-775-1121

HNTB
HNTB CORPORATION
330 Passaic Avenue
Fairfield, New Jersey 07004
(973) 227-6480

LIN ASSOCIATES, INC.
CONSULTING ENGINEERS
BOSTON, MA (617)969-4215

KEY MAP

DATE	REVISION

PORTLAND INTERNATIONAL JETPORT
CITY OF PORTLAND
PORTLAND, MAINE

AIRFIELD LIGHTING VAULT

ELECTRICAL DETAILS

SCALE: None	DATE: 5/20/03
FILE NO.: E5-2	HNTB JOB NO. 27380

SHEET

E5-2

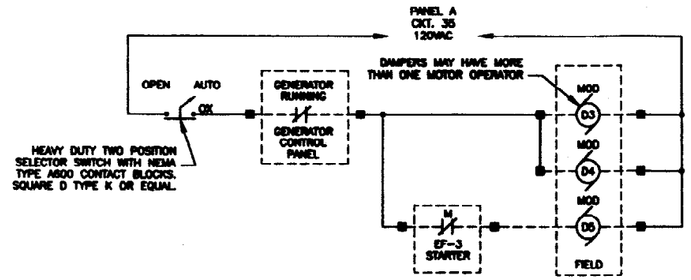

■ DENOTES DEDICATED TERMINAL BLOCK IN STARTER.

– – – DENOTES WIRING EXTERNAL TO STARTER.

NOTE: ALL DAMPERS ARE NORMALLY OPEN, POWER IS APPLIED TO CLOSE THE DAMPERS.

GENERATOR DAMPERS CONTROL DIAGRAM

SCALE: NONE

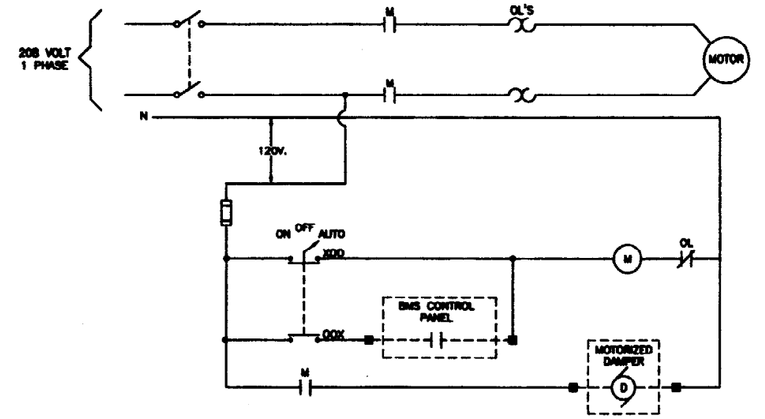

■ DENOTES DEDICATED TERMINAL BLOCK IN STARTER.

– – – DENOTES WIRING EXTERNAL TO STARTER.

TO BMS CONTROL PANEL

EF-1 AND EF-2 MOTOR STARTER CONTROL DIAGRAMS

SCALE: NONE

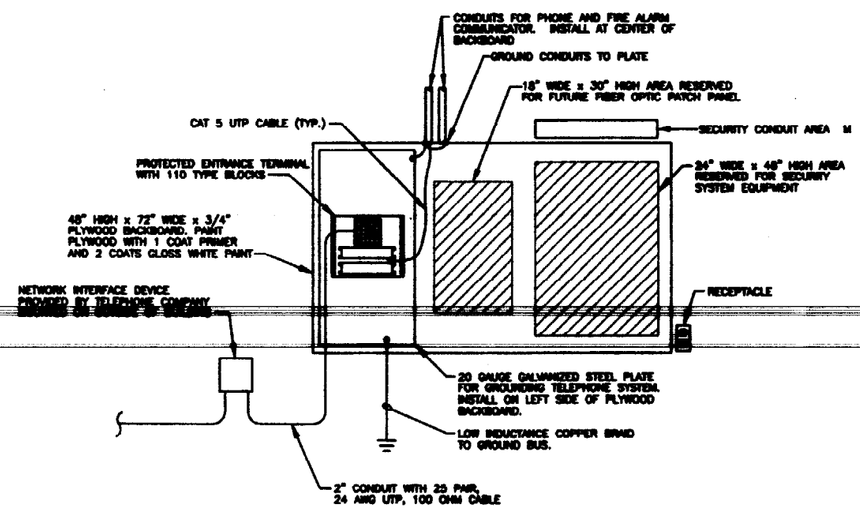

TELEPHONE SYSTEM DIAGRAM

SCALE: NONE

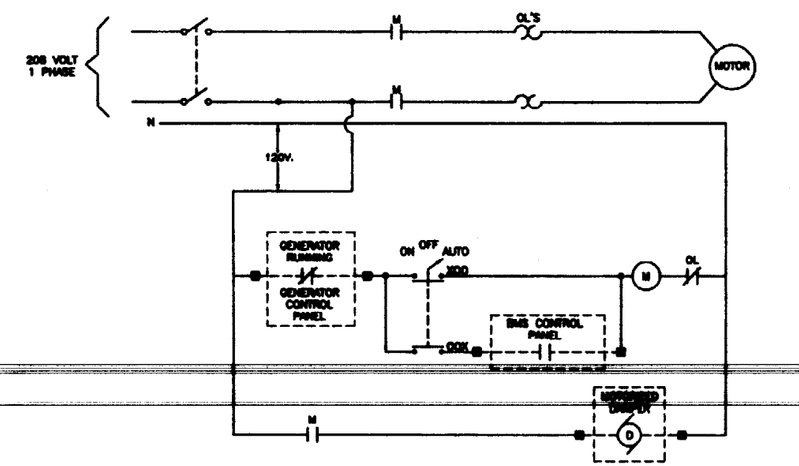

■ DENOTES DEDICATED TERMINAL BLOCK IN STARTER.

– – – DENOTES WIRING EXTERNAL TO STARTER.

TO GENERATOR DAMPER CONTROL PANEL

EF-3 MOTOR STARTER CONTROL DIAGRAM

SCALE: NONE

DeLuco-Hoffman Associates, Inc.
Consulting Engineers
770 Main Street
South Portland, Maine 04106
207-775-1121

HNTB
HNTB CORPORATION
330 Passaic Avenue
Fairfield, New Jersey 07004
(973) 227-6480

LIN ASSOCIATES, INC.
CONSULTING ENGINEERS
BOSTON, MA (617)566-4210

KEY MAP

DATE	REVISION

PORTLAND INTERNATIONAL JETPORT
CITY OF PORTLAND
PORTLAND, MAINE

AIRFIELD LIGHTING VAULT

CONTROL DIAGRAMS AND TELEPHONE DETAIL

SCALE: None	DATE: 5/20/03
FILE NO.: E5-3	HNTB JOB NO. 27380

SHEET

E5-3

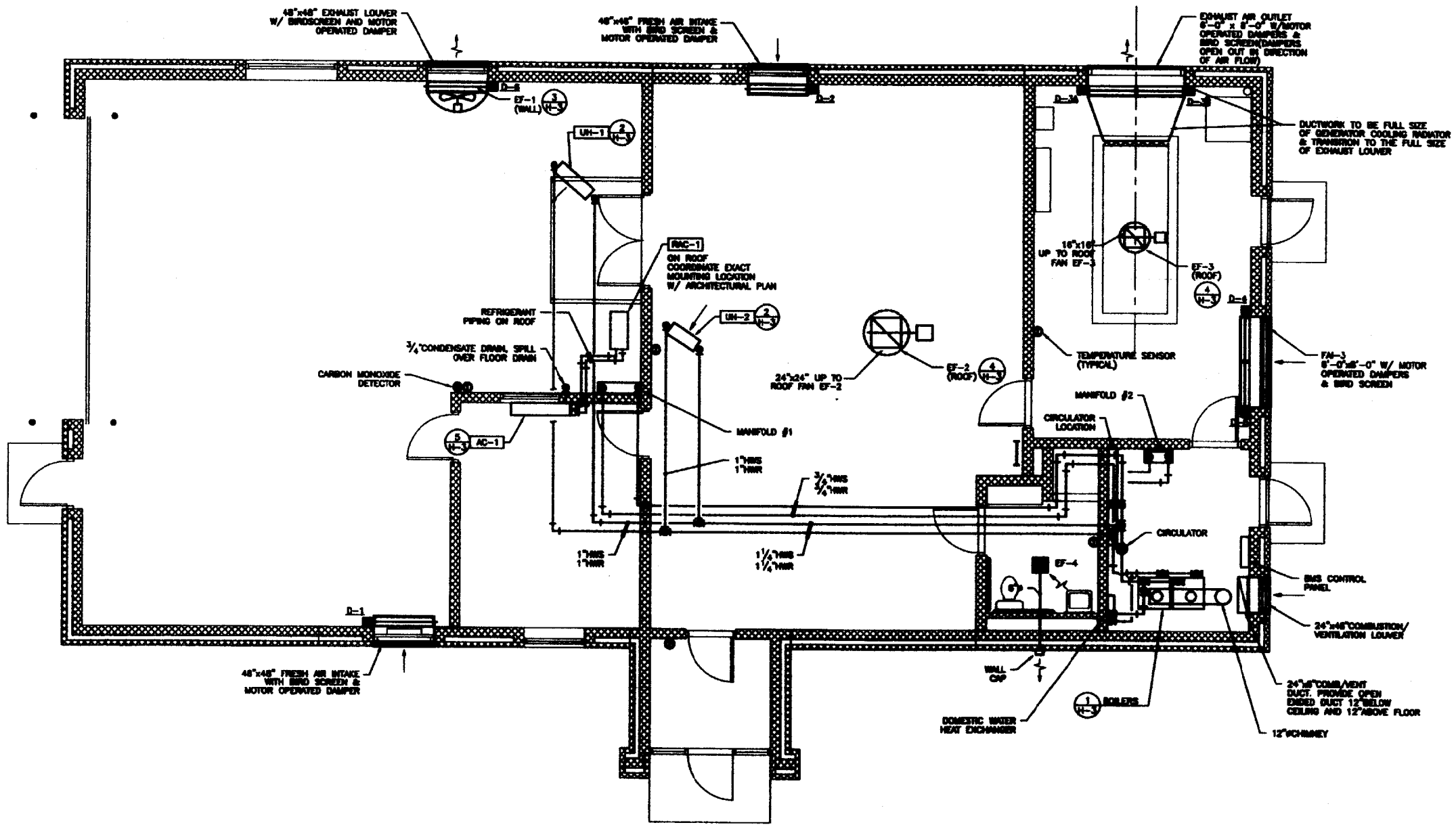

NOTE:
FOR BASEMENT SLAB HEATING SYSTEM LAYOUT SEE DRAWING M-2.

DeLuca-Hoffman Associates, Inc.
Consulting Engineers
778 Main Street
South Portland, Maine 04106
207-775-1121

HNTB
HNTB CORPORATION
336 Fairfield Avenue
Fairfield, New Jersey 07004
(973) 227-4400

LIN ASSOCIATES, INC.
CONSULTING ENGINEERS
BOSTON, MA (617)350-0510

SED ASSOCIATES CORP.
Consulting Engineers

This document, as an instrument of service, is the sole property of SED Associates, Corp. It's use by the Owner or others for other projects or for completion of this project by others is strictly forbidden. Distribution in connection with this project shall not be construed as publication in derogation of the Engineer's rights.
© 2001 SED Associates Corp.

KEY MAP

DATE	REVISION

PORTLAND INTERNATIONAL JETPORT
CITY OF PORTLAND
PORTLAND, MAINE

AIRFIELD LIGHTING VAULT

TITLE:
HVAC FLOOR PLAN

SCALE: 1/4"=1'-0"	DATE: JULY 23, 2001
FILE NO.: 2120H1.dwg	HNTB JOB NO. 27380

STATE OF MAINE
PROFESSIONAL ENGINEER

SHEET
H-1

2120H1.dwg 71601 110038

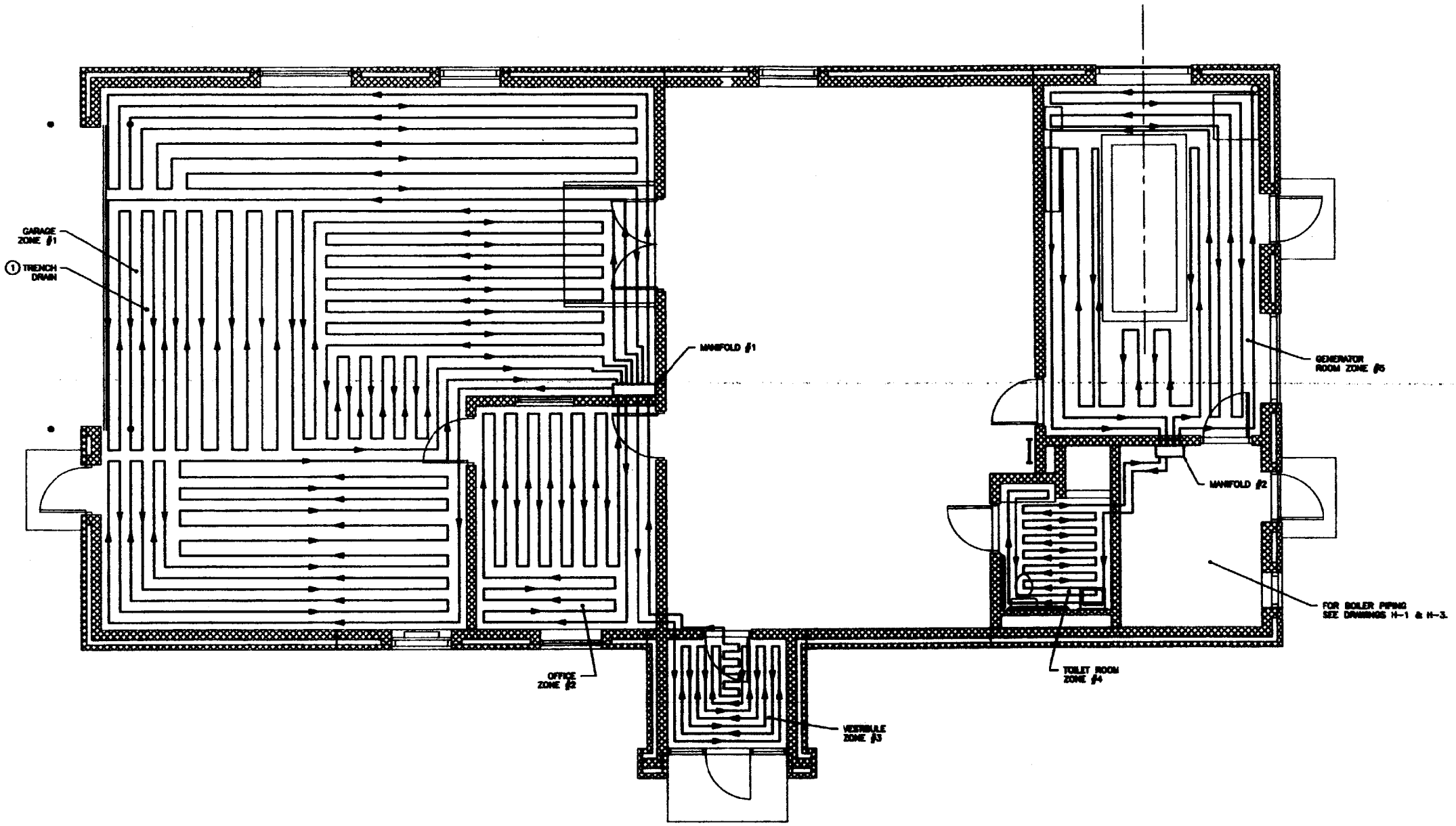

RADIANT SLAB HEATING SYSTEM

1/4" = 1'-0"

NOTES THIS SHEET:

1. COORDINATE INSTALLATION OF RADIANT TUBING WITH TRENCH DRAIN.

GENERAL NOTES:

1. FOR LOOP SIZES, SEE SCHEDULE ON DRAWING H-3.
2. LOOP DIAGRAM PROVIDED IS INTENDED TO SHOW GENERAL INTENT OF DESIGN. FINAL LOOP LAYOUT & SIZE TO BE VERIFIED & MODIFIED AS REQUIRED TO SUIT INSTALLED SYSTEM MANUFACTURER'S RECOMMENDATION & GUIDELINES.

DeLuca-Hoffman Associates, Inc.
Consulting Engineers
778 Main Street
South Portland, Maine 04106
207-775-1121

HNTB
HNTB CORPORATION
330 Passaic Avenue
Fairfield, New Jersey 07004
(973) 227-5400

LIN ASSOCIATES, INC.
CONSULTING ENGINEERS
WOBURN, MA (617)933-2015

SED ASSOCIATES CORP.
Consulting Engineers
78 NORTH BRIDGE
WOBURN, MA 01801
TEL (617) 933-2000
FAX (617) 933-2020

This document, as an instrument of service, is the sole property of SED Associates, Corp. It's use by the Owner or others for other projects or for completion of this project by others is strictly forbidden. Distribution in connection with this project shall not be construed as publication in derogation of the Engineer's rights.
© 2001 SED Associates Corp.

KEY MAP

DATE	REVISION

PORTLAND INTERNATIONAL JETPORT
CITY OF PORTLAND
PORTLAND, MAINE

AIRFIELD LIGHTING VAULT

TITLE:
HVAC FLOOR PLAN

SCALE: 1/4"=1'-0"	DATE: JULY 23, 2001
FILE NO.: 2120H2.dwg	HNTB JOB NO. 27380

STATE OF MAINE
REGISTERED PROFESSIONAL ENGINEER
5304

SHEET
H-2

12OH1.dwg 71601 110038

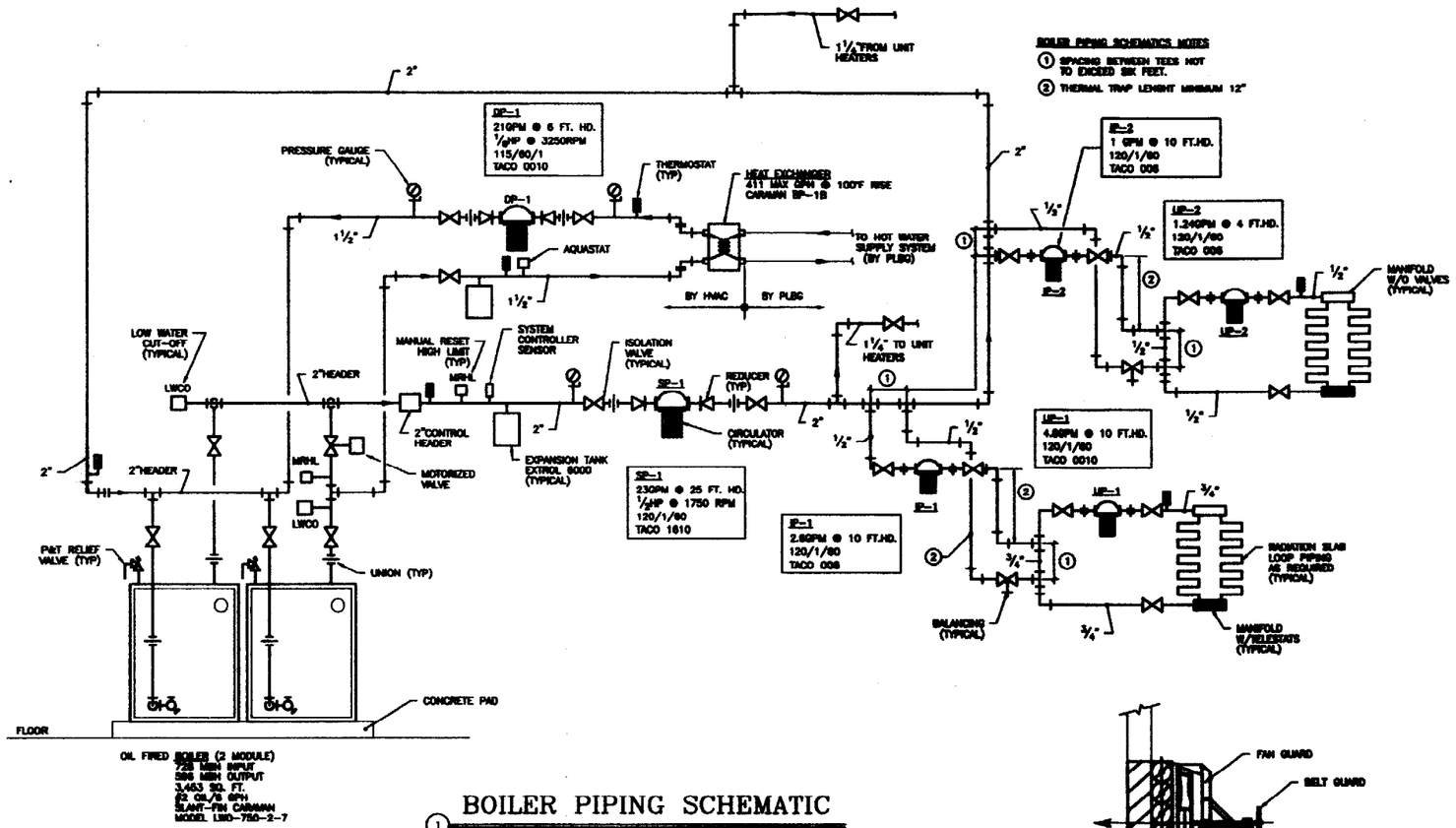

BOILER PIPING SCHEMATICS NOTES

1. SPACING BETWEEN TEES NOT TO EXCEED SIX FEET.
2. THERMAL TRAP LENGHT MINIMUM 12"

1 BOILER PIPING SCHEMATIC

NOT TO SCALE

NOTE:

1. TOP OF UNIT HEATER 12" BELOW CEILING.

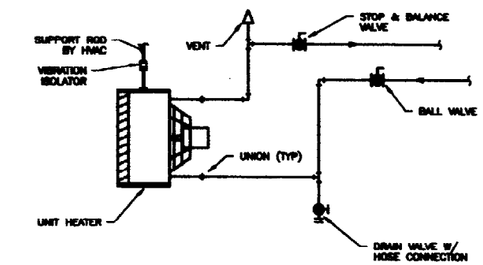

2 UNIT HEATER PIPING DETAIL

NOT TO SCALE

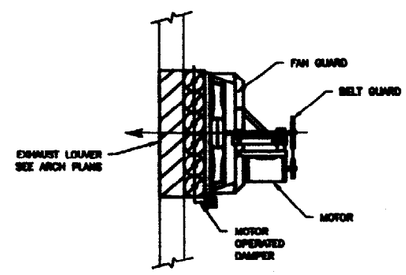

3 SIDEWALL FAN

NOT TO SCALE

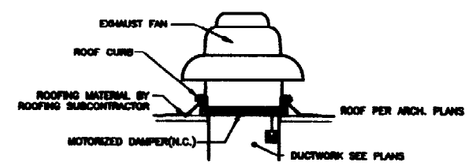

4 ROOF FAN

NOT TO SCALE

RADIANT SLAB HEATING SYSTEM SCHEDULE												
ROOM NAME	PANEL TYPE	ZONE NUMBER	TUBE TYPE	AREA SQ. FT.	BUTH SQ. FT.	NOM. TUBE SPACING	LOOP LENGTH	LOOP FLOW	SURFACE TEMP.	WATER TEMP	MANIFOLD NUMBER	ZONE NUMBER
GARAGE	FLOOR	1	5/8" hePEX	318	30	12"	332	1.02	83	118	1	1
GARAGE	FLOOR	1	5/8" hePEX	318	30	12"	332	1.02	83	118	1	1
GARAGE	FLOOR	1	5/8" hePEX	318	30	12"	332	1.02	83	118	1	1
GARAGE	FLOOR	1	5/8" hePEX	318	30	12"	332	1.02	83	118	1	1
OFFICE	FLOOR	2	5/8" hePEX	173	30	12"	213	0.55	83	118	1	2
VESTIBULE	FLOOR	3	5/8" hePEX	56	30	9"	156	0.18	83	118	1	3
TOILET	FLOOR	4	5/8" hePEX	89	30	9"	143	0.18	83	118	2	4
GENERATOR	FLOOR	5	5/8" hePEX	56	30	12"	195	0.18	83	118	2	5

DESIGNED BASED UPON WIRSBO RADIANT SLAB SYSTEM

EXHASUT FAN SCHEDULE							
TAG	TYPE	AIR FLOW (CFM)	ESP (IN WC)	MOTOR HP	MOTOR ELECT.	MOTOR RPM	MODEL
EF-1	WALL	1700	0.375	1/6	208/1/60	1140	CENTRAL AIR #P18A
EF-2	ROOF	5000	0.375	1	208/1/60	1050	ACME CENTRI MASTER PV 180
EF-3	ROOF	1680	0.375	1/3	208/1/60	1750	ACME CENTRI MASTER PV 180
EF-4	CEILING	100	0.375	1.5A	120/1/60	---	BROAN #676

UNIT HEATER SCHEDULE						
TAG	BTUH	GPM	CFM	MOTOR HP	ELECT.	REZNOR MODEL
UH-1	136200	14	2800	1/6	120/1/60	HH1100
UH-2	63800	6.5	1400	1/8	120/1/60	HH400

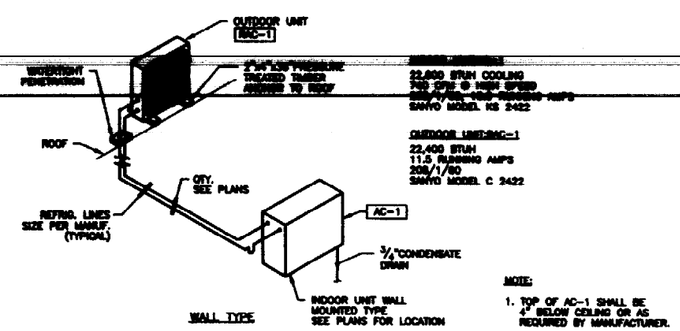

NOTE:

1. TOP OF AC-1 SHALL BE 4" BELOW CEILING OR AS REQUIRED BY MANUFACTURER.

5 DUCTLESS SPLIT SYSTEM

NOT TO SCALE

DeLuca-Hoffman Associates, Inc.
Consulting Engineers
778 Main Street
South Portland, Maine 04106
207-775-1121

HNTB
HNTB CORPORATION
Parsippany, New Jersey 07054
(973) 627-6400

LIN ASSOCIATES, INC.
CONSULTING ENGINEERS
BOSTON, MA (617)266-4610

SED ASSOCIATES CORP.
Consulting Engineers

This document, as an instrument of service, is the sole property of SED Associates, Corp. It's use by the Owner or others for other projects or for completion of this project by others is strictly forbidden. Distribution in connection with this project shall not be construed as publication in derogation of the Engineer's rights.
© 2001 SED Associates Corp.

KEY MAP

DATE	REVISION

PORTLAND INTERNATIONAL JETPORT
CITY OF PORTLAND
PORTLAND, MAINE

AIRFIELD LIGHTING VAULT

TITLE:
LEGEND, DETAILS & SCHEDULES

SCALE: NONE
DATE: JULY 23, 2001
FILE NO.: 2120H3.dwg
HNTB JOB NO. 27380

SHEET
H-3

2120H3.dwg 7501 33740