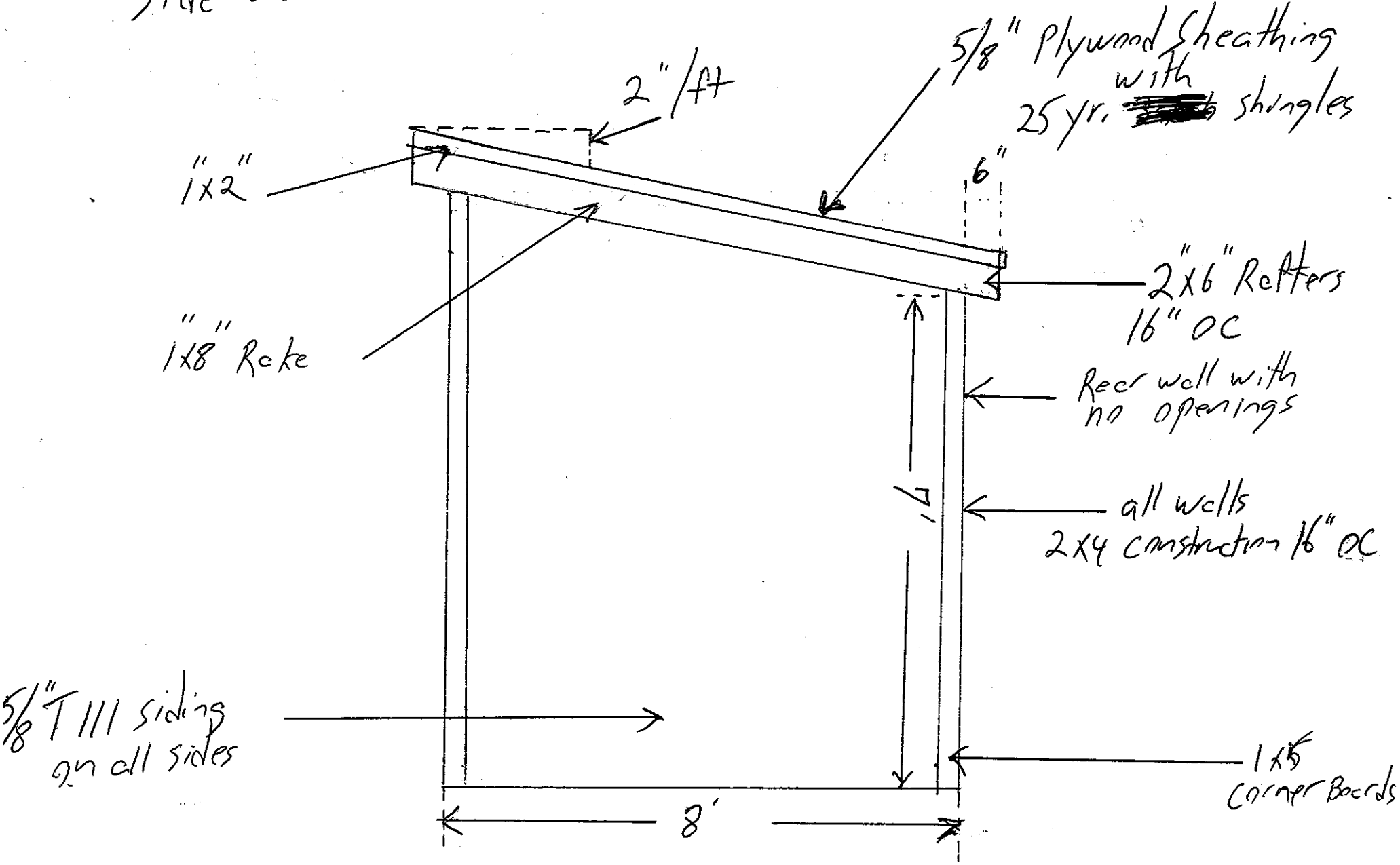Side view 20 scale