GENERAL NOTES

1. ALL PARTITIONS NOT DIMENSIONED ARE 3 1/2" WOOD STUDS. (3 1/2", 20GA METAL STUDS MAY BE USED.)
2. SEE FINISH SCHEDULE/FLOOR FINISH PLAN FOR EXTENT OF FLOOR TILE.
3. DATUM LINES ARE TO FACE OF PLYWOOD SHEATHING U.N.O.
4. INTERIOR DIMENSIONS ARE FROM FACE TO FACE OF FRAMING.
5. INTERIOR SOFFITS ARE SHOWN ON SHEET A3.
6. SEE SITE PLAN FOR LOCATIONS/ EXTENT OF SIDEWALKS, ETC.

SYMBOL LEGEND

2 / A3	- DETAIL NUMBER - DRAWING NUMBER
HALL 101	DENOTES ROOM NAME AND NUMBER. REFER TO ROOM FINISH SCHEDULE.
A9.1-07	INTERIOR ELEVATION NUMBERS. REFER TO DRAWINGS A9 & A9.1.
W1	WINDOW NUMBER. REFER TO WINDOW SCHEDULE.
101	DOOR NUMBER. REFER TO DOOR SCHEDULE.
1	NOTE REFERENCE. REFER TO NOTE LEGEND.

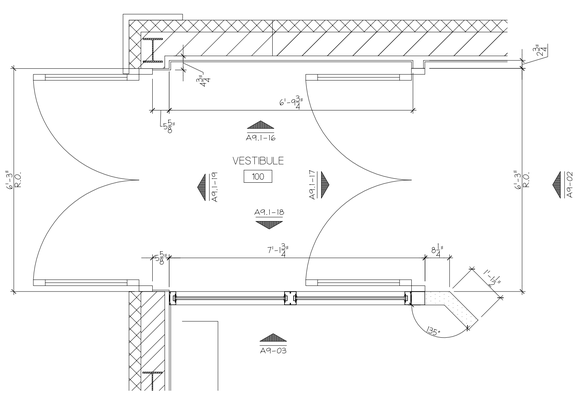

ENLARGED PARTIAL PLAN 2 / A2.1

SCALE 1/2" = 1'-0"

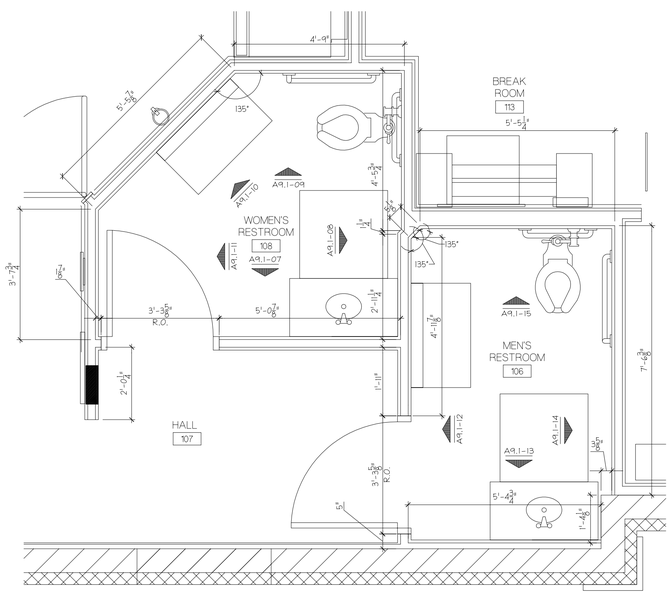

ENLARGED PARTIAL PLAN 1 / A2.1

SCALE 1/2" = 1'-0"

REVISIONS:

* INDICATES NO REVISION TO THIS SHEET

DATE ISSUED: 07-02-2008

wd partners

Atlanta
Boston
Chicago
Columbus
Los Angeles
Miami
Sacramento

7007 Discovery Blvd.
Dublin, OH 43017
614.634.7000 T
614.634.7777 F

wdpartners.com

Tim Hortons

1408 CONGRESS STREET
PORTLAND, ME 04102

ENLARGE PARTIAL PLANS

DRAWN BY: MAV CHECKED BY: JPY

SAI # 08138

DRAWING NUMBER:

A2.1