NOTES:

1. TRENCHES LOCATED ON THE ROAD SHOULDER SHALL BE TREATED THE SAME AS STREET EXCEPT FOR PAVING
2. SATISFACTORY EXCAVATED MATERIAL CAN BE USED FOR BACKFILL ABOVE THE LINE OF NARROW TRENCH LIMIT.

TRENCH WIDTH Ws OR Wu		
DIAMETER OF PIPE D	Wu UNSHEETED	Ws SHEETED
12" AND SMALLER	3'-0"	4'-2"
15"	3'-2"	4'-4"
18"	3'-6"	4'-8"
21"	3'-10"	5'-0"
24"	4'-2"	5'-4"
27"	4'-6"	5'-8"
30"	4'-10"	6'-0"
36"	5'-6"	6'-8"
42"	6'-2"	7'-4"
48"	6'-10"	8'-0"

TRENCH WIDTH DATA

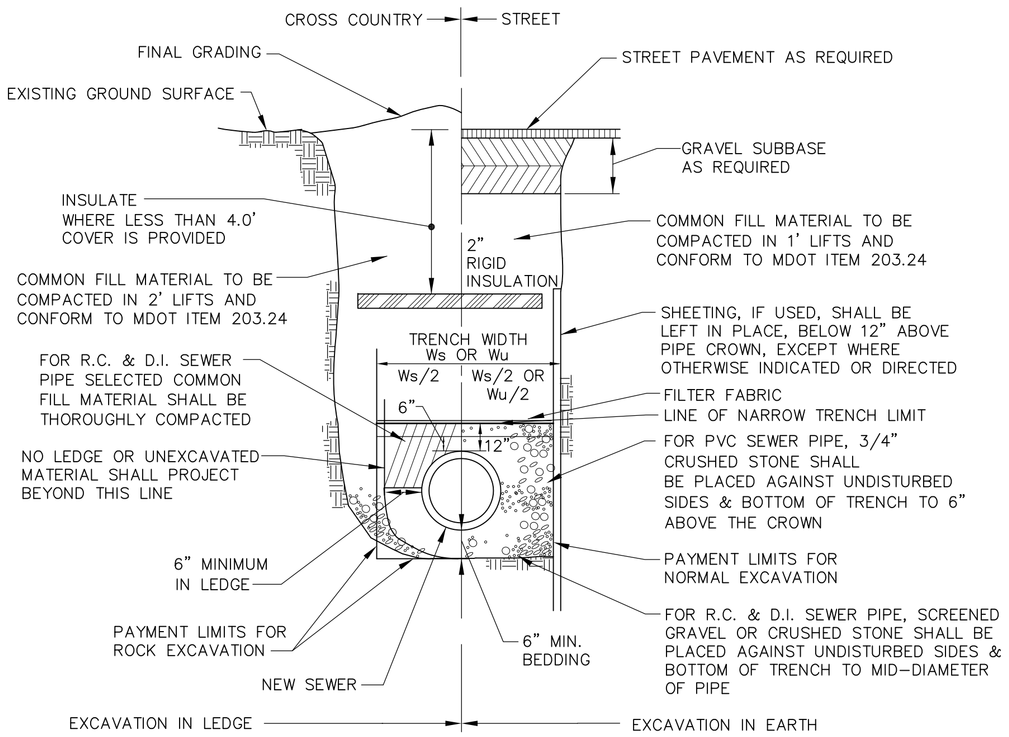

SEWER TRENCH SECTION

N. T. S.

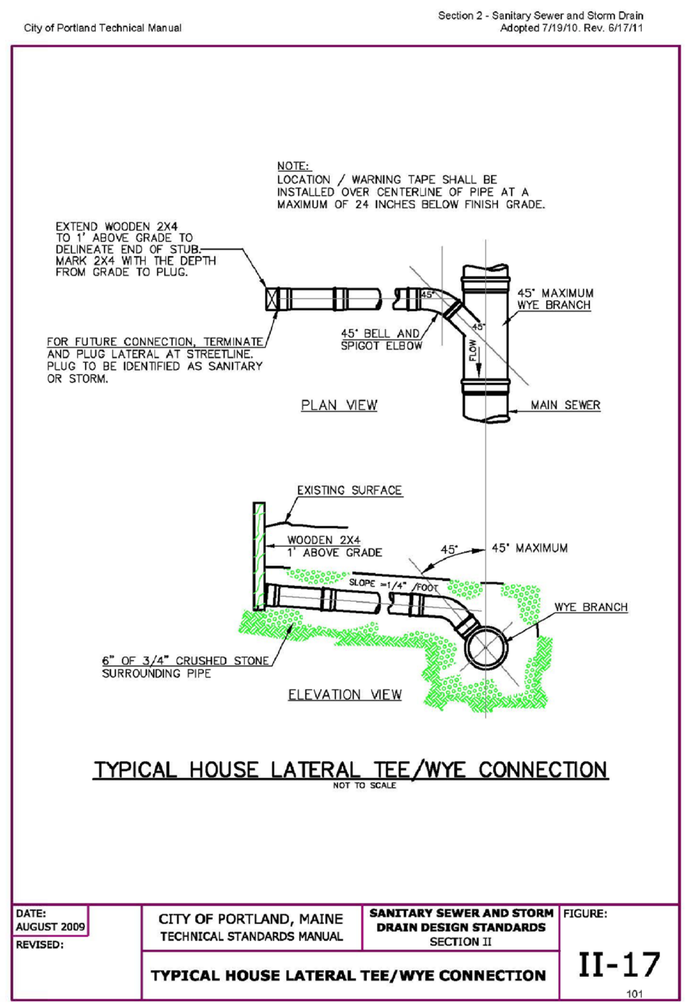

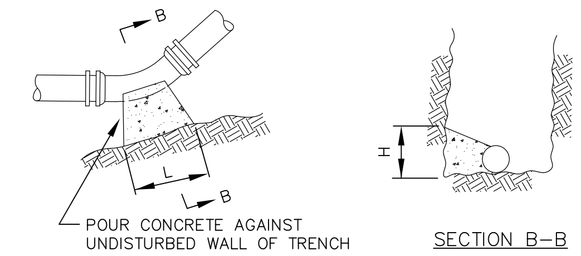

BEARING AREAS – SQUARE FEET					
NOMINAL DIAMETER OF FITTING	FITTING				
	DEAD END	BRANCH OF TEE	90° BEND	45° BEND	BEND SMALLER THAN 45° GREATER THAN 10°
6"	2	2	3	2	2
8"	4	4	5	3	2
10"	6	6	8	4	2
12"	8	8	10	6	3
14"	12	12	16	9	4
16"	12	12	20	10	5

NOTES

1. ALL BENDS, TEE HYDRANTS AND DEAD ENDS SHALL BE BRACED WITH CONCRETE THRUST BLOCKS.
2. BEARING AREA IS AREA OF CONCRETE IN CONTACT WITH WALL OF TRENCH=HxL.
3. HEIGHT (H) AND LENGTH (L) AS REQUIRED TO OBTAIN BEARING AREA IN TABLE.

THRUST BLOCK DETAILS

NOT TO SCALE

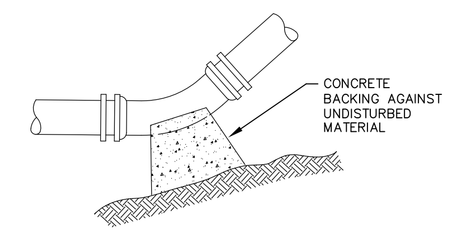

TYPICAL BEND

NOT TO SCALE

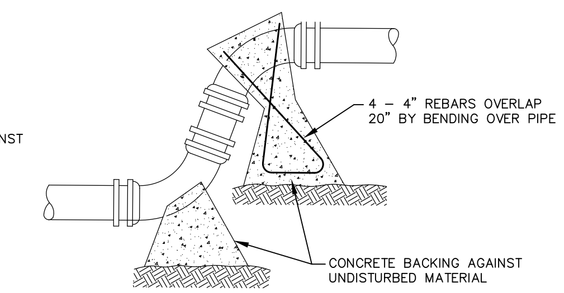

TYPICAL OFF-SET

NOT TO SCALE

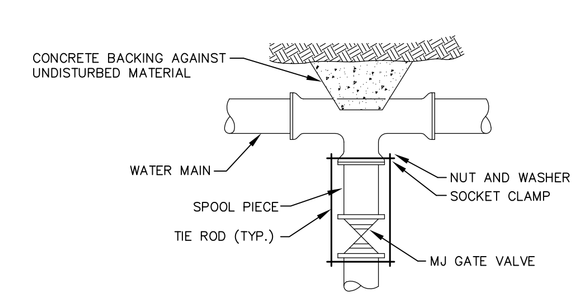

TYPICAL VALVE CONNECTION

RESTRAINED JOINT TEE

NOT TO SCALE

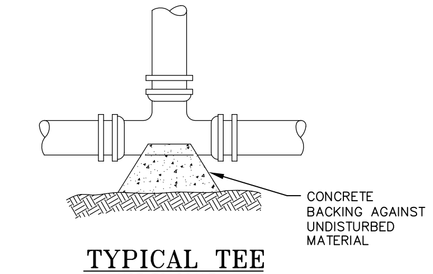

TYPICAL TEE

NOT TO SCALE

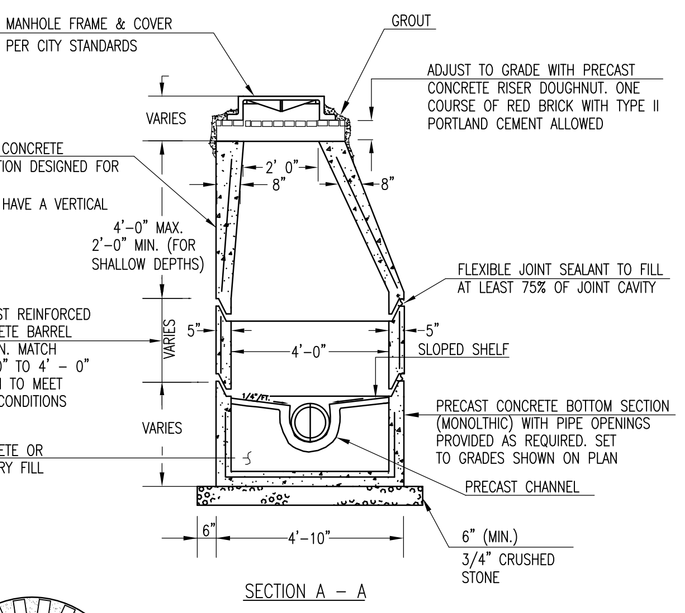

SECTION A – A

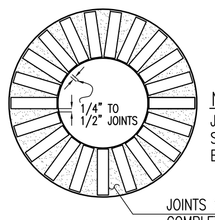

NOTE:
JOINTS SHALL BE STAGGERED FOR EACH COURSE

JOINTS SHALL BE COMPLETELY FILLED WITH MORTAR

BRICK JOINT DETAIL

NOTE:
ALL SEWER PIPES SHALL BE INSTALLED WITH THE BELLS UPGRADIENT.

NOTE:

1. ALIGNMENT, TO BE BUILT ON SMOOTH RADIUS. CHANNEL TO BE SHAPED TO ACCEPT ADDITIONAL INLET PIPES.
2. MANHOLE FRAME & COVER "CASCADE TYPE" GRATE PER MDOT STANDARD
3. PROVIDE 2' LONG (MAX.) STUBS FOR ALL PIPES ENTERING OR LEAVING SEWER MANHOLES
4. THE MANHOLES SHALL BE VACUUM TESTED AND THE SEWER PIPELINE TESTED USING A LOW PRESSURE AIR TEST IN ACCORDANCE WITH TOWN SPECIFICATIONS.
5. FOR SHALLOW MANHOLES, A 2' CONE MAY BE USED.
6. FLEXIBLE RUBBER BOOT OR APPROVED EQUAL SHALL BE EQUIPPED WITH A MINIMUM OF 2 STAINLESS STEEL BANDS

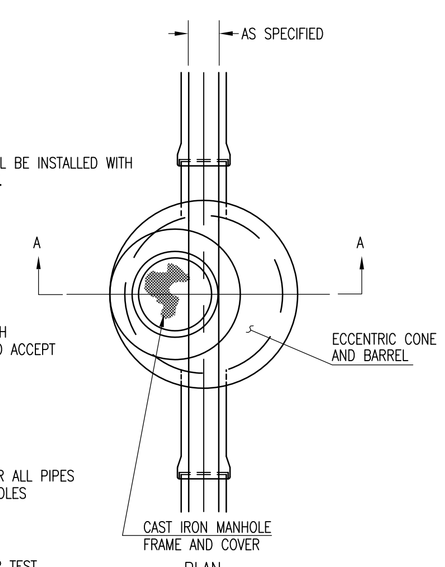

PLAN

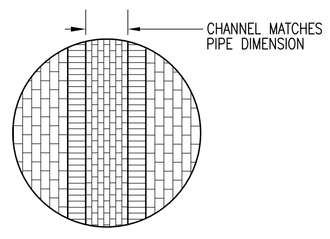

SHELF DETAIL

CATCH BASIN/DRAIN MANHOLE DIMENSIONAL REQUIREMENTS		
I.D.	WALL WIDTH	FLOOR THICKNESS
4'-0"	5"	6"
5'-0"	6"	6"
6'-0"	7"	6"
8'-0"	8"	8"
10'-0"	10"	9"

NOTE:
MANHOLE, FRAME AND COVER SHALL BE DESIGNED TO WITHSTAND HS-20 LOADING.

PRECAST CONCRETE SEWER MANHOLE TYPE "A"

NOT TO SCALE

GENERAL NOTES

1. LOCATIONS OF UTILITIES ARE APPROXIMATE.
2. IT SHALL BE THE CONTRACTOR'S RESPONSIBILITY TO HAVE ALL THE UTILITIES LOCATE THEIR SERVICES PRIOR TO THE START OF CONSTRUCTION.
3. ALL EXISTING CATCH BASINS, MANHOLES, CONNECTIONS, AND OUTLET PIPING SHALL BE CLEANED AND LEFT IN SATISFACTORY OPERATING CONDITION AFTER CONSTRUCTION HAS BEEN COMPLETED. NO SEPARATE PAYMENT WILL BE MADE FOR THIS WORK.
4. ALL MANHOLE FRAMES SHALL BE SUPPLIED WITH SOLID MANHOLE COVERS; SEE STANDARD DETAIL.
5. ALL GRANITE CATCH BASIN STONES, MANHOLE FRAMES AND COVERS TO BE REMOVED SHALL BE REUSED AS DIRECTED BY THE PROJECT ENGINEER. NO SEPARATE PAYMENT WILL BE MADE FOR THIS WORK.
6. ALL TERMINAL MANHOLES SHALL HAVE CHANNELS CONSTRUCTED STRAIGHT THROUGH THE MANHOLE.

GENERAL NOTES FOR SEWER PIPES, MANHOLES AND CATCH BASINS

1. ALL CONCRETE SHALL BE CLASS "A" AND HAVE A MINIMUM ULTIMATE COMPRESSIVE STRENGTH OF 4000 lbs. PER SQ. INCH AT THE END OF 28 DAYS, UNLESS OTHERWISE NOTED.
2. PRECAST REINFORCED CONE BARREL MANUFACTURED PER ASTM SPEC. C-478-67
3. SEWER BRICK SHALL CONFORM TO ASTM SPEC. DESIGNATE ON C-32-63, GRADE MA AND SA.
4. ALL MANHOLES SHALL HAVE A BITUMINOUS WATERPROOFING APPLIED TO THE EXTERIOR SURFACE.
5. CASTINGS SHALL CONFORM TO ASTM DESIGNATION A48-CLASS 35. ALL PARTS OF CASTINGS, EXCEPT FINISHED SURFACE, SHALL RECEIVE A COAT OF COAL TAR PITCH VARNISH OR ASPHALTUM PAINT WHICH SHALL BE SMOOTH AND TOUGH BUT NOT BRITTLE.
6. MANHOLES TO BE CONSTRUCTED OF PRECAST REINFORCED CONCRETE.
7. ALL PRECAST MANHOLES AND CATCH BASINS SHALL BE IDENTIFIED BY LABLE, PAINTED ON THE SIDE OF THE STRUCTURE BY THE MANUFACTURER.
8. STORM MANHOLES SHALL HAVE CAST IRON COVERS WITH ONE DRILLED PICK HOLE. 26"ø NEENAH COVER OR APPROVED EQUAL. NO HOLES ARE ALLOWED IN SEWER MANHOLE COVERS
9. ALL SEWER PIPES USED SHALL BE SDR-35, MEETING THE REQUIREMENTS OF ASTM 3034. PIPES SHALL HAVE GASKETS AND BE INSTALLED WITH BELLS UPHILL.
10. THE RUBBER BOOT FOR THE SEWER PIPE PENETRATIONS INTO THE MANHOLES SHALL HAVE AT LEAST 2 STAINLESS STEEL CLAMPS.

THIS PLAN IS FOR REVIEW PURPOSES ONLY AND IS NOT INTENDED FOR CONSTRUCTION OR RECORDING

Revision:	By:	Date:	Change:
2	SMA	5/11/18	SUBMITTED FOR PRELIMINARY SITE PLAN/SUBDIVISION REVIEW
1	SMA	5/4/18	SUBMITTED FOR MDEP TIER 1 REVIEW

PROJECT NUMBER: 41041 | ACAD FILE: 41041-DETAILS.DWG | SCALE: AS NOTED | DATE: MAY 1, 2018

Drawing Name:
CONSTRUCTION DETAILS – SHEET 5

Project Name and Location:
PROPOSED CAPISIC MEADOWS SUBDIVISION
130 BANCROFT STREET, PORTLAND, MAINE 04102

Prepared For:
WB GROUP, INC
130 BANCROFT STREET, PORTLAND, MAINE 04102

STATE OF MAINE ANTHONY P. PANCIOCCO JR. No. 10941 LICENSED PROFESSIONAL ENGINEER
5-11-18

SHEET 13 OF 14

SURVEYING • ENGINEERING • LAND PLANNING
Northeast Civil Solutions
INCORPORATED
381 PAYNE ROAD, SCARBOROUGH, MAINE 04074
tel 207.883.1000 fax 207.883.1001 e-mail / website info@northeastcivilsolutions.com www.northeastcivilsolutions.com

E:\AND PROJECT\41000\41041-MAGNER-PORTLAND\@LANDSET\41041-DETAILS.DWG