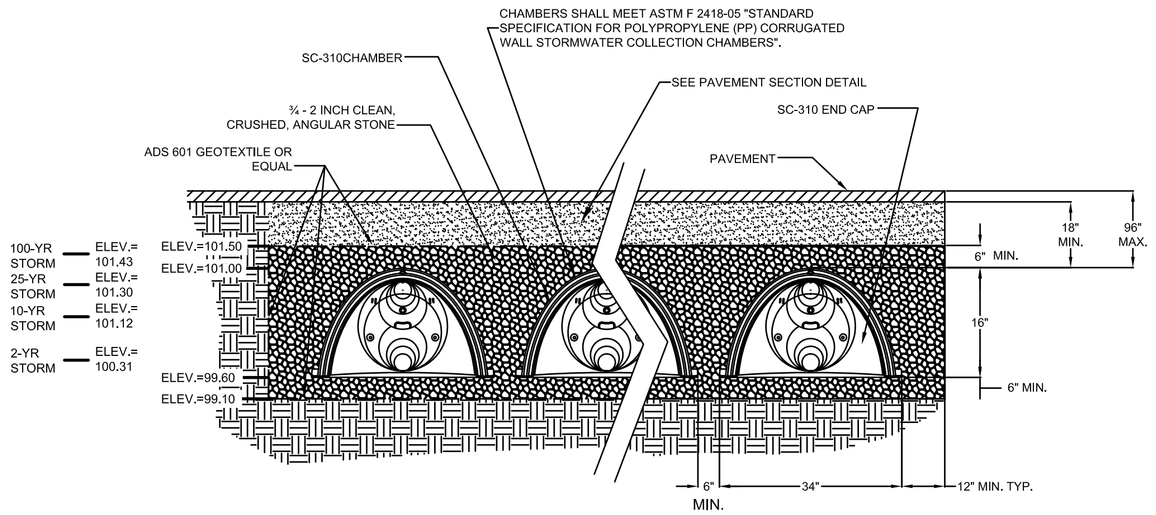

NOTES:

1. SC-310 CHAMBERS SHALL CONFORM TO THE REQUIREMENTS OF ASTM F2418 "STANDARD SPECIFICATION FOR POLYPROPYLENE (PP) CORRUGATED WALL STORMWATER COLLECTION CHAMBERS", OR ASTM F2922 "STANDARD SPECIFICATION FOR POLYETHYLENE (PE) CORRUGATED WALL STORMWATER COLLECTION CHAMBERS".
2. SC-310 CHAMBERS SHALL BE DESIGNED IN ACCORDANCE WITH ASTM F2787 "STANDARD PRACTICE FOR STRUCTURAL DESIGN OF THERMOPLASTIC CORRUGATED WALL STORMWATER COLLECTION CHAMBERS".
3. "ACCEPTABLE FILL MATERIALS" TABLE ABOVE PROVIDES MATERIAL LOCATIONS, DESCRIPTIONS, GRADATIONS, AND COMPACTION REQUIREMENTS FOR FOUNDATION, EMBEDMENT, AND FILL MATERIALS.
4. THE "SITE DESIGN ENGINEER" REFERS TO THE ENGINEER RESPONSIBLE FOR THE DESIGN AND LAYOUT OF THE STORMTECH CHAMBERS FOR THIS PROJECT.
5. THE SITE DESIGN ENGINEER IS RESPONSIBLE FOR ASSESSING THE BEARING RESISTANCE (ALLOWABLE BEARING CAPACITY) OF THE SUBGRADE SOILS AND THE DEPTH OF FOUNDATION STONE WITH CONSIDERATION FOR THE RANGE OF EXPECTED SOIL MOISTURE CONDITIONS.
6. PERIMETER STONE MUST BE EXTENDED HORIZONTALLY TO THE EXCAVATION WALL FOR BOTH VERTICAL AND SLOPED EXCAVATION WALLS.

SC-310 CHAMBER SYTEM CROSS-SECTION
NOT TO SCALE

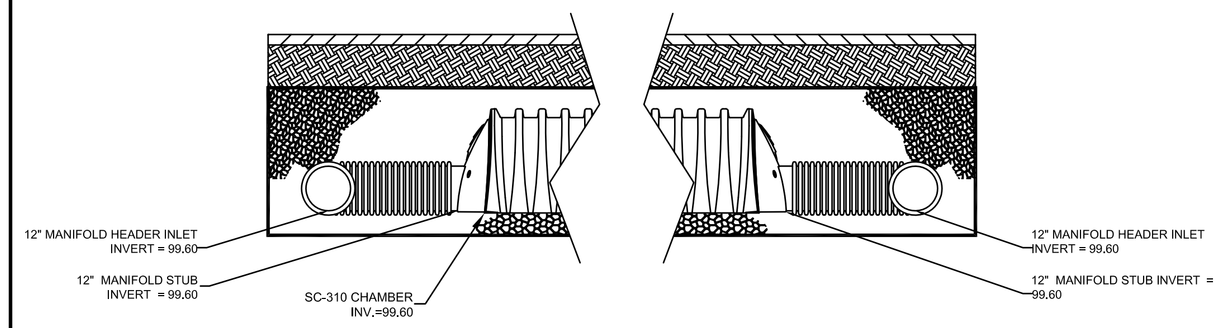

SC-310 CHAMBER HEADER DETAIL
NOT TO SCALE

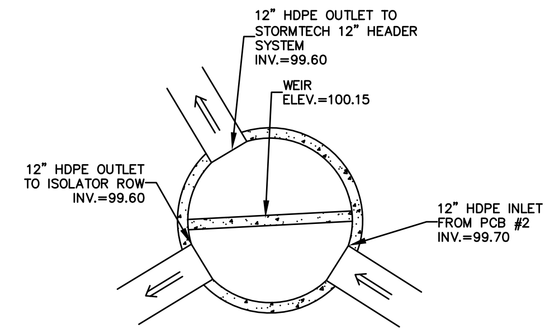

INLET STRUCTURE DETAIL – PDMH#1
NOT TO SCALE

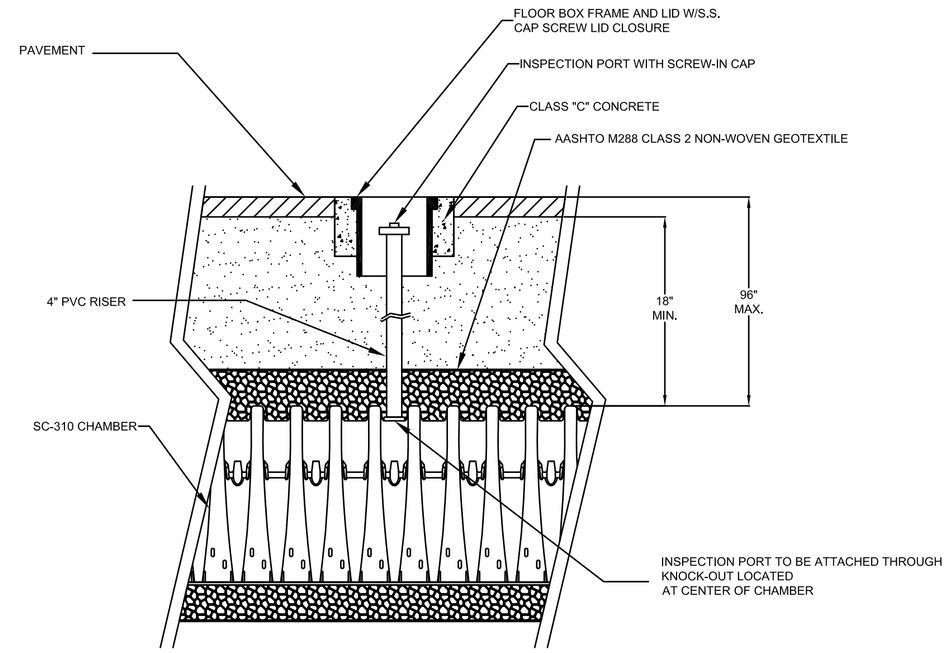

INSPECTION PORT DETAIL
NOT TO SCALE

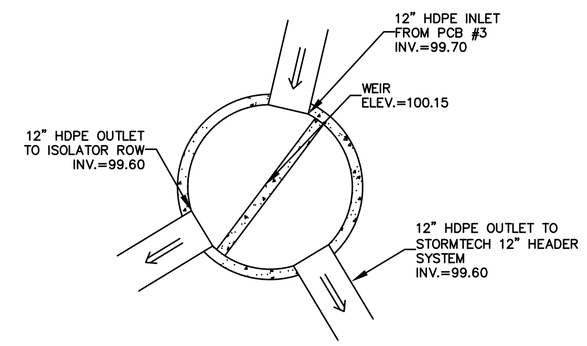

INLET STRUCTURE DETAIL – PDMH#5
NOT TO SCALE

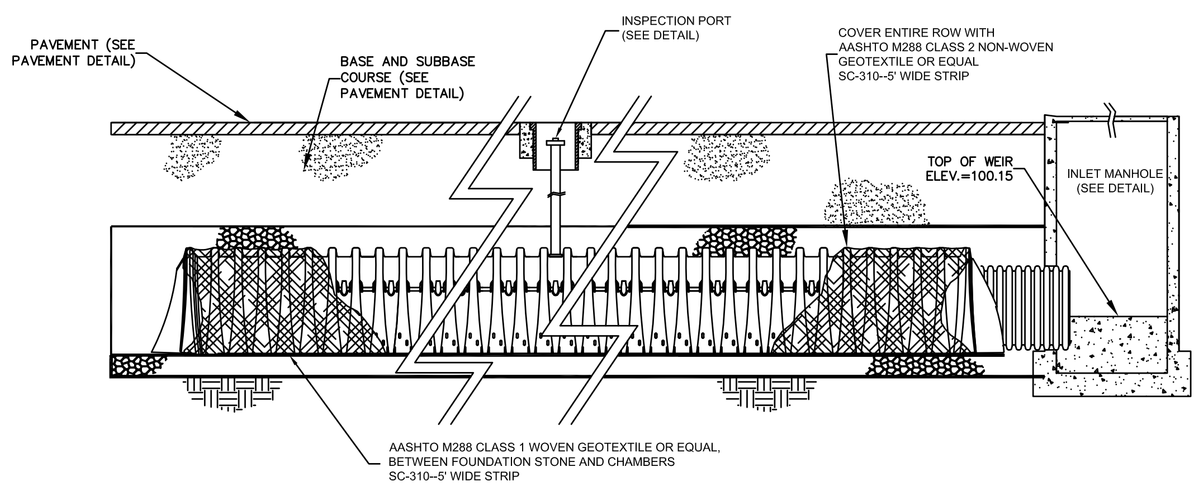

SC-310 ISOLATOR ROW DETAIL
NOT TO SCALE

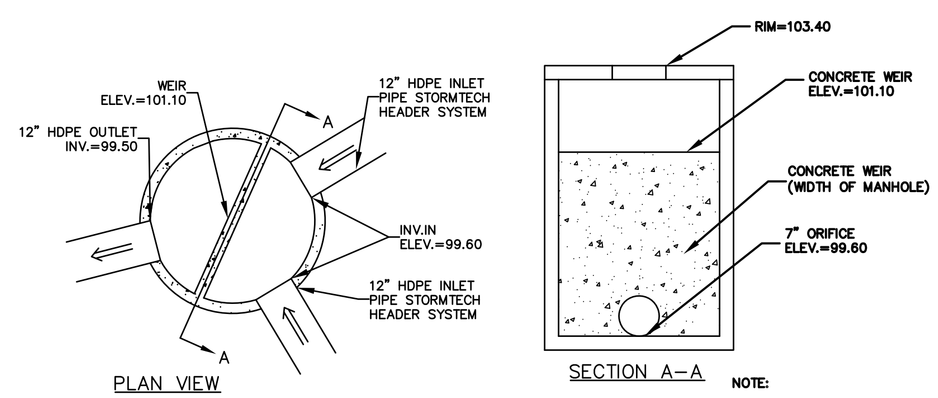

NOTE:

1. CONTRACTOR SHALL PROVIDE A SUBMITTAL FOR THIS STRUCTURE

OUTLET STRUCTURE DETAIL – PDMH#2
NOT TO SCALE

Tighe&Bond
Consulting Engineers
www.tighebond.com

STATE OF MAINE
Bradlee Mazzotta
9410
LICENSED
PROFESSIONAL ENGINEER

Jewish Community Alliance of Southern Maine

Proposed Neighborhood Center

Portland, Maine

May 8, 2015

Mark	Date	Description

PROJECT NO:	J-0096
FILE:	J0096-DETAILS.dwg
DRAWN BY:	GWH
CHECKED:	BLM
APPROVED BY:	BLM

DETAILS SHEET

SCALE: AS SHOWN

C-9

May 08, 2015 4:08pm Plotted By: gwh
Tighe & Bond, Inc. J:\J0096 Jewish Community Alliance\DWG-CAD\DESIGN\J0096-DETAILS.dwg Layout: C-9