PROJECT NAME AND LOCATION
PROPOSED NEIGHBORHOOD CENTER 43°-39'-29.87"N
1342 CONGRESS STREET 70°-17'-43.50"W
PORTLAND, MAINE 04103

DESCRIPTION
THE PROJECT CONSISTS OF THE CLEARING AND DEMOLITION OF EXISTING FEATURES ON SITE FOR A PROPOSED 1-STORY 19,300 SF NEIGHBORHOOD CENTER WITH 49 PARKING SPACES AND ASSOCIATED SITE IMPROVEMENTS INCLUDING SIDEWALK, STORMWATER MANAGEMENT, UTILITIES AND LANDSCAPING.

THE WORK IS ANTICIPATED TO START IN SUMMER 2015, AND BE COMPLETED BY SPRING 2016.

DISTURBED AREA
THE TOTAL AREA TO BE DISTURBED IS APPROXIMATELY 1.90 ACRES.

SOIL CHARACTERISTICS
BASED ON THE PHASE 1 SITE ASSESSMENT PREPARED BY ST GERMAIN COLLINS AND DATED FEBRUARY 10, 2015 THE SOILS CONSIST OF SILTY CLAY SOILS THAT ARE ASSUMED TO BE HYDROLOGIC GROUP C SOILS.

SEQUENCE OF MAJOR ACTIVITIES
1. CUT AND CLEAR TREES.
2. CONSTRUCT TEMPORARY AND PERMANENT SEDIMENT, EROSION AND DETENTION CONTROL FACILITIES. EROSION, SEDIMENT AND DETENTION MEASURES SHALL BE INSTALLED PRIOR TO ANY EARTH MOVING OPERATIONS THAT WILL INFLUENCE STORMWATER RUNOFF SUCH AS:
   - NEW CONSTRUCTION
   - DEVELOPMENT OF BORROW PIT AREAS
   - DISPOSAL OF SEDIMENT SPOIL, STUMP AND OTHER SOLID WASTE
   - CONTROL OF DUST
   - CONSTRUCTION OF SITE ACCESS
   - NEARNESS OF CONSTRUCTION SITE TO RECEIVING WATERS
   - CONSTRUCTION DURING LATE WINTER AND EARLY SPRING
3. ALL PERMANENT DITCHES, SWALES, DETENTION, RETENTION AND SEDIMENTATION BASINS TO BE STABILIZED USING THE VEGETATIVE AND NON-STRUCTURAL BMPS PRIOR TO DIRECTING RUNOFF TO THEM.
4. CLEAR AND DISPOSE OF DEBRIS.
5. CONSTRUCT TEMPORARY CULVERTS AND DIVERSION CHANNELS AS REQUIRED.
6. GRADE AND GRAVEL DRIVES AND PARKING AREAS – ALL DRIVES AND PARKING AREA SHALL BE STABILIZED IMMEDIATELY AFTER THEIR CONSTRUCTION.
7. BEGIN PERMANENT AND TEMPORARY SEEDING AND MULCHING. ALL CUT AND FILL SLOPES HALL BE SEEDED AND MULCHED IMMEDIATELY AFTER THEIR CONSTRUCTION.
8. DAILY, OR AS REQUIRED, CONSTRUCT TEMPORARY BERMS, DRAINS, DITCHES, SILT FENCES, SILT SOCKS, SEDIMENT TRAPS, ETC., MULCH AND SEED AS REQUIRED.
9. FINISH PAVING ALL DRIVES AND PARKING AREAS.
10. INSPECT AND MAINTAIN ALL EROSION AND SEDIMENT CONTROL MEASURES.
11. COMPLETE PERMANENT SEEDING AND LANDSCAPING.
12. REMOVE TRAPPED SEDIMENTS FROM COLLECTOR DEVICES AS APPROPRIATE AND THEN REMOVE TEMPORARY EROSION CONTROL MEASURES.

NOTE: THE CONSTRUCTION SEQUENCE MUST LIMIT THE DURATION AND AREA OF DISTURBANCE.

NAME OF RECEIVING WATERS
THE STORM WATER RUNOFF FLOWS OFFSITE TO AN EXISTING DRAINAGE SWALE.

EROSION AND SEDIMENT CONTROLS AND STABILIZATION PRACTICES

A. STABILIZATION SHALL BE INITIATED ON ALL LOAM STOCKPILES AND DISTURBED AREAS WHERE CONSTRUCTION ACTIVITY WILL NOT OCCUR FOR MORE THAN TWENTY ONE (21) CALENDAR DAYS BY THE FOURTEENTH (14TH) DAY AFTER CONSTRUCTION ACTIVITY HAS PERMANENTLY OR TEMPORARILY CEASED IN THAT AREA. STABILIZATION MEASURES TO BE USED INCLUDE:
   1. TEMPORARY SEEDING
   2. MULCHING
B. DURING CONSTRUCTION, RUNOFF WILL BE DIVERTED AROUND THE SITE WITH EARTH DIKES, PIPING OR STABILIZED CHANNELS WHERE POSSIBLE. SHEET RUNOFF FROM THE SITE WILL BE FILTERED THROUGH SILT SOCKS. ALL STORM DRAIN BASIN INLETS SHALL BE PROVIDED WITH FLARED END SECTIONS AND TRASH RACKS. THE SITE SHALL BE STABILIZED FOR THE WINTER BY NOVEMBER 15.
C. AN AREA SHALL BE CONSIDERED STABLE WHEN ONE OF THE FOLLOWING HAS OCCURRED:
   1. BASE COURSE GRAVELS HAVE BEEN INSTALLED IN AREAS TO BE PAVED.
   2. A MINIMUM OF 85% VEGETATED GROWTH HAS BEEN ESTABLISHED.
   3. A MINIMUM OF 3" OF NON-EROSIVE MATERIAL SUCH STONE OR RIPRAP HAS BEEN INSTALLED.
   4. EROSION CONTROL BLANKETS HAVE BEEN PROPERLY INSTALLED.
D. WINTER STABILIZATION PRACTICES:
   1. ALL PROPOSED POST-DEVELOPMENT VEGETATED AREAS WHICH DO NOT EXHIBIT A MINIMUM OF 85% VEGETATED GROWTH BY NOVEMBER 15TH, OR WHICH ARE DISTURBED AFTER NOVEMBER 15TH, SHALL BE STABILIZED BY SEEDING AND INSTALLING EROSION CONTROL BLANKETS ON SLOPES GREATER THAN 4:1, AND SEEDING AND PLACING 3 TO 4 TONS OF MULCH PER ACRE, SECURE WITH ANCHOR NETTING, ELSEWHERE.
   2. ALL DITCHES OR SWALES WHICH DO NOT EXHIBIT A MINIMUM OF 85% VEGETATIVE GROWTH BY OCTOBER 15TH, OR WHICH ARE DISTURBED AFTER OCTOBER 15TH, SHALL BE STABILIZED WITH STONE OR EROSION CONTROL BLANKETS APPROPRIATE FOR THE DESIGN FLOW CONDITION.
   3. AFTER NOVEMBER 15TH, INCOMPLETE DRIVE OR PARKING SURFACES SHALL BE PROTECTED WITH A MINIMUM OF 3-INCHES OF CRUSHED GRAVEL PER NHDOT ITEM 304.3, OR IF CONSTRUCTION IS TO CONTINUE THROUGH THE WINTER SEASON BE CLEARED OF ANY ACCUMULATED SNOW AFTER EACH STORM EVENT.

OFF SITE VEHICLE TRACKING
THE CONTRACTOR SHALL CONSTRUCT THE STABILIZED CONSTRUCTION ENTRANCE PRIOR TO ANY EXCAVATION ACTIVITIES.

INSTALLATION, MAINTENANCE AND INSPECTION PROCEDURES OF EROSION AND SEDIMENT CONTROLS
A. GENERAL:
   THESE ARE THE GENERAL INSPECTION AND MAINTENANCE PRACTICES THAT WILL BE USED TO IMPLEMENT THE PLAN.
   1. ALL SWALES SHALL BE STABILIZED PRIOR TO DIRECTING FLOW TO THEM.
   2. THE SMALLEST PRACTICAL PORTION OF THE SITE WILL BE DENUDED AT ONE TIME.
   3. ALL CONTROL MEASURES WILL BE INSPECTED AT LEAST ONCE EACH WEEK AND FOLLOWING ANY STORM EVENT OF 0.25 INCHES OR GREATER.
   4. ALL MEASURES WILL BE MAINTAINED IN GOOD WORKING ORDER; IF A REPAIR IS NECESSARY, IT WILL BE INITIATED WITHIN 24 HOURS OF REPORT.
   5. BUILT UP SEDIMENT WILL BE REMOVED FROM SILT SOCK WHEN IT HAS REACHED ONE THIRD THE HEIGHT OF THE SILT SOCK.
   6. ALL DIVERSION DIKES WILL BE INSPECTED AND ANY BREACHES PROMPTLY REPAIRED.
   7. TEMPORARY SEEDING AND PLANTING WILL BE INSPECTED FOR BARE SPOTS, WASHOUTS, AND UNHEALTHY GROWTH.
   8. A MAINTENANCE INSPECTION REPORT WILL BE MADE AFTER EACH INSPECTION.
   9. A REPRESENTATIVE OF THE SITE CONTRACTOR, WILL BE RESPONSIBLE FOR INSPECTIONS, MAINTENANCE AND REPAIR ACTIVITIES, AND FILLING OUT THE INSPECTION AND MAINTENANCE REPORT.
   10. THE EROSION CONTROL PROCEDURES SHALL CONFORM TO THE CITY OF PORTLAND TECHNICAL MANUAL.
      A. ALL FILLS SHALL BE COMPACTED AS REQUIRED TO REDUCE EROSION, SLIPPAGE, SETTLEMENT, SUBSIDENCE, OR OTHER RELATED PROBLEMS. FILL INTENDED TO SUPPORT BUILDINGS, STRUCTURES, AND CONDUITS, ETC., SHALL BE COMPACTED IN ACCORDANCE WITH LOCAL CODES OR SPECIFICATIONS.
      B. THE USE OF SAND FOR THE PURPOSE OF PEDESTRIAN SAFETY AND SAFE DRIVING CONDITION SHALL BE MINIMIZED.
      C. THE OWNER SHALL CLEAN ALL CATCH BASINS, DRAIN MANHOLES AND SWEEP THE PARKING LOT ON AN ANNUAL BASIS.
B. FILTERS:
   1. SILT SOCK
      A. APPLICATION
         I. SILT SOCK ARE TO BE INSTALLED DOWN SLOPE OF ANY DISTURBED AREA REQUIRING EROSION AND SEDIMENT CONTROL AND FILTRATION OF SOLUBLE POLLUTANTS FROM RUNOFF. SILT SOCK ARE EFFECTIVE WHEN INSTALLED PERPENDICULAR TO SHEET OR LOW CONCENTRATED FLOW.
      A. INSTALLATION DETAILS
         II. SILT SOCK USED FOR PERIMETER CONTROL OF SEDIMENT AND SOLUBLE POLLUTANTS IN STORM RUNOFF SHALL MEET FILTREXX SOXX MATERIAL SPECIFICATIONS, OR APPROVED EQUAL, AND USE CERTIFIED FILTREXX FILTER MEDIA, OR APPROVED EQUAL.
         III. CONTRACTOR IS REQUIRED TO BE FILTREXX CERTIFIED AS DETERMINED BY FILTREXX INTERNATIONAL, LLC., OR APPROVED EQUAL. CERTIFICATION SHALL BE CONSIDERED CURRENT IF APPROPRIATE IDENTIFICATION IS SHOWN DURING TIME OF BID OR AT TIME OF APPLICATION. LOOK FOR THE FILTREXX CERTIFIED SEAL, OR APPROVED EQUAL.
         IV. SILT SOCK WILL BE PLACED AT LOCATIONS INDICATED ON PLANS AS DIRECTED BY THE ENGINEER.
         V. SILT SOCK SHOULD BE INSTALLED PARALLEL TO THE BASE OF THE SLOPE OR OTHER DISTURBED AREA. IN EXTREME CONDITIONS (i.e. 2:1 SLOPES), A SECOND SILT SOCK SHALL BE CONSTRUCTED AT THE TOP OF THE SLOPE.
         VI. STAKES SHALL BE INSTALLED THROUGH THE MIDDLE OF THE SILT SOCK ON 10 FT CENTERS, USING 2 INCH BY 2 INCH BY 3 FEET WOODEN STAKES. IN THE EVENT STAKING IS NOT POSSIBLE, I.E., WHEN SILT SOCK ARE USED ON PAVEMENT, HEAVY CONCRETE BLOCKS SHALL BE USED BEHIND THE SILT SOCK TO HELP STABILIZE DURING RAINFALL/RUNOFF EVENTS.
         VII. STAKING DEPTH FOR SAND AND SILT LOAM SOILS SHALL BE 12 INCHES, AND 8 INCHES FOR CLAY SOILS.
         VIII. LOOSE COMPOST MAY BE BACKFILLED ALONG THE UPSLOPE SIDE OF THE SILT SOCK, FILLING THE SEAM BETWEEN THE SOIL SURFACE AND THE DEVICE, IMPROVING FILTRATION AND SEDIMENT RETENTION.
         IX. IF THE SILT SOCK IS TO BE LEFT AS A PERMANENT FILTER OR PART OF THE NATURAL LANDSCAPE, IT MAY BE SEEDED AT TIME OF INSTALLATION FOR ESTABLISHMENT OF PERMANENT VEGETATION.
         X. SILT SOCK ARE NOT TO BE USED IN PERENNIAL, EPHEMERAL, OR INTERMITTENT STREAMS.
         XI. SEE DETAIL FOR CORRECT SILT SOCK INSTALLATION.
   2. SEQUENCE OF INSTALLATION:
      A. SEDIMENT BARRIERS SHALL BE INSTALLED PRIOR TO ANY SOIL DISTURBANCE OF THE CONTRIBUTING DRAINAGE AREA ABOVE THEM.
   3. MAINTENANCE:
      A. SILT SOCK BARRIERS SHALL BE INSPECTED IMMEDIATELY AFTER EACH RAINFALL AND AT LEAST DAILY DURING PROLONGED RAINFALL. THEY SHALL BE REPAIRED IF THERE ARE ANY SIGNS OF EROSION OR SEDIMENTATION BELOW THEM. ANY REQUIRED REPAIRS SHALL BE MADE IMMEDIATELY. IF THERE ARE SIGNS OF UNDERCUTTING AT THE CENTER OR THE EDGES, OR IMPOUNDING OF LARGE VOLUMES OF WATER BEHIND THEM, SEDIMENT BARRIERS SHALL BE REPLACED WITH A TEMPORARY CHECK DAM.
      B. SHOULD THE FABRIC ON A SILT SOCK BARRIER DECOMPOSE OR BECOME INEFFECTIVE PRIOR TO THE END OF THE EXPECTED USABLE LIFE AND THE BARRIER STILL IS NECESSARY, THE FABRIC SHALL BE REPLACED PROMPTLY.
      C. SEDIMENT DEPOSITS SHOULD BE REMOVED AFTER EACH STORM EVENT. THEY MUST BE REMOVED WHEN DEPOSITS REACH APPROXIMATELY ONE-THIRD (1/3) THE HEIGHT OF THE BARRIER.
      D. ANY SEDIMENT DEPOSITS REMAINING IN PLACE AFTER THE SILT SOCK BARRIER IS NO LONGER REQUIRED SHALL BE DRESSED TO CONFORM WITH THE EXISTING GRADE, PREPARED AND SEEDED.
C. MULCHING:
   1. TIMING:
      A. IN ORDER FOR MULCH TO BE EFFECTIVE, IT MUST BE IN PLACE PRIOR TO MAJOR STORM EVENTS. THERE ARE TWO (2) TYPES OF STANDARDS WHICH SHALL BE USED TO ASSURE THIS:
         I. APPLY MULCH PRIOR TO ANY STORM EVENT. IT WILL BE NECESSARY TO CLOSELY MONITOR WEATHER PREDICTIONS, USUALLY BY CONTACTING THE NATIONAL WEATHER SERVICE IN CONCORD, TO HAVE ADEQUATE WARNING OF SIGNIFICANT STORMS.
         II. REQUIRED MULCHING WITHIN A SPECIFIED TIME PERIOD. THE TIME PERIOD CAN RANGE FROM 14 TO 21 DAYS OF INACTIVITY ON A AREA, THE LENGTH OF TIME VARYING WITH SITE CONDITIONS. PROFESSIONAL JUDGMENT SHALL BE USED TO EVALUATE THE INTERACTION OF SITE CONDITIONS (SOIL ERODIBILITY, SEASON OF YEAR, EXTENT OF DISTURBANCE, PROXIMITY TO SENSITIVE RESOURCES, ETC.) AND THE POTENTIAL IMPACT OF EROSION ON ADJACENT AREAS TO CHOOSE AN APPROPRIATE TIME RESTRICTION.
   2. APPLICATION RATE:
      A. MULCH SHALL BE APPLIED AT A RATE OF BETWEEN 1.5 TO 2 TONS PER ACRE, OR 90 TO 100 POUNDS PER 1000 SQUARE FEET. THE MINIMUM MULCH REQUIREMENT, REGARDLESS OF APPLICATION RATE IS THAT SOIL MUST NOT BE VISIBLE.
   3. GUIDELINES FOR WINTER MULCH APPLICATION:
      A. WHEN MULCH IS APPLIED TO PROVIDE PROTECTION OVER WINTER (PAST THE GROWING SEASON) IT SHALL BE AT A RATE OF 6,000 POUNDS OF HAY OR STRAW PER ACRE. A TACKIFIER MAY BE ADDED TO THE MULCH. NO MULCH IS TO BE APPLIED OVER MORE THAN TWO (2) INCHES OF SNOW. IF SNOW DEPTH IS GREATER THAN TWO (2) INCHES IT SHALL BE REMOVED BEFORE MULCHING.
   4. MAINTENANCE:
      A. ALL MULCHES MUST BE INSPECTED PERIODICALLY, IN PARTICULAR AFTER RAINSTORMS, TO CHECK FOR RILL EROSION. IF LESS THAN 90% OF THE SOIL SURFACE IS COVERED BY MULCH, ADDITIONAL MULCH SHALL BE IMMEDIATELY APPLIED.
   5. EXCELSIOR MATTING:
      A. EXCELSIOR MATTING SHALL BE USED IN PLACE OF MULCH ON ALL SLOPES STEEPER THAN 3:1.
   6. SLOPES:
      A. ALL SLOPES GREATER THAN 15% DURING THE REGULAR CONSTRUCTION SEASON ARE TO HAVE NETTING OVER MULCH OR COMBINATION EROSION CONTROL MAT USED (MULCH AND NET). THIS APPLIES TO ALL SLOPES GREATER THAN 8% AFTER OCTOBER 1. MULCHING IS REQUIRED OVER HYDROSEEDING.
D. TEMPORARY GRASS COVER:
   1. SEEDBED PREPARATION:
      A. APPLY FERTILIZER AT THE RATE OF 600 POUNDS PER ACRE OF 10-10-10 FERTILIZER.
      B. APPLY LIMESTONE (EQUIVALENT TO 50 PERCENT CALCIUM PLUS MAGNESIUM OXIDE) AT A RATE OF THREE (3) TONS PER ACRE.
   2. SEEDING:
      A. UTILIZE ANNUAL RYE GRASS AT A RATE OF 40 LBS/ACRE.
      B. WHERE THE SOIL HAS BEEN COMPACTED BY CONSTRUCTION OPERATIONS, LOOSEN SOIL TO A DEPTH OF TWO (2) INCHES BEFORE APPLYING FERTILIZER, LIME AND SEED.
      C. APPLY SEED UNIFORMLY BY HAND, CYCLONE SEEDER, OR HYDROSEEDER (SLURRY INCLUDING SEED AND FERTILIZER). HYDROSEEDINGS, WHICH INCLUDE MULCH,MAY BE LEFT ON SOIL SURFACE. SEEDING RATES MUST BE INCREASED 10% WHEN HYDROSEEDING.
   3. MAINTENANCE:
      A. TEMPORARY SEEDINGS SHALL BE PERIODICALLY INSPECTED. AT A MINIMUM, 95% OF THE SOIL SURFACE SHOULD BE COVERED BY VEGETATION. IF ANY EVIDENCE OF EROSION OR SEDIMENTATION IS APPARENT, REPAIRS SHALL BE MADE AND OTHER TEMPORARY MEASURES USED IN THE INTERIM (MULCH, FILTER BARRIERS, CHECK DAMS, ETC.).
E. PERMANENT MULCHING
   1. TIMING:
      A. APPLYING PLANT RESIDUES OR OTHER SUITABLE MATERIALS THAT RESIST DECOMPOSITION SUCH AS WOOD CHIPS OR CRUSHED STONE TO THE SOIL SURFACE WHERE VEGETATION STABILIZATION IS EITHER IMPRACTICAL OR DIFFICULT TO ESTABLISH.
      B. WINTER STABILIZATION SHALL MEET OR EXCEED THE FOLLOWING REQUIREMENTS.
   2. CONSIDERATIONS:
      A. PERMANENT MULCHING SHALL BE USED TO STABILIZE CHRONIC EROSION AREAS WHICH RECEIVE HEAVY FOOT OR VEHICLE TRAFFIC. NOT INTENDED FOR AREAS OF CONCENTRATED FLOWS.
      B. IF WOOD CHIPS ARE USED IN LANDSCAPED AREAS (TREES & SHRUBS), A SUPPLEMENTAL APPLICATION OF CHEMICAL FERTILIZER SHOULD BE APPLIED AT A RATE OF TWO POUNDS OF 5-10-5 PER 100 SQUARE FEET OF MULCH.
      C. IF CRUSHED STONE IS USED, A PLASTIC FILTER CLOTH SHALL BE PLACED BETWEEN THE GROUND AND THE STONE.
   3. SPECIFICATIONS
      A. WOOD CHIPS OR AGGREGATE SHALL BE USED ON SLOPES NO STEEPER THAN 3 HORIZONTALLY ON 1 VERTICALLY.
      B. PERMANENT MULCH SHALL BE 3 INCHES OR MORE IN DEPTH.
      C. WOOD CHIPS SHALL BE APPLIED AT A RATE OF 500-900 POUNDS PER 1,000 SQUARE FEET OR 10-20 TONS PER ACRE. WOOD CHIPS SHALL BE GREEN OR AIR-DRIED AND FREE OF OBJECTIONABLE COARSE MATERIALS.
      D. AGGREGATE COVER (GRAVEL, CRUSHED STONE OR SLAG) SHALL BE WASHED, 0.25 INCHES TO 2.5 INCHES AND APPLIED AT A RATE OF 9 CUBIC YARDS PER 1,000 SQUARE FEET.
   4. MAINTENANCE
      A. WOOD CHIPS SHALL BE MONITORED FOR DECOMPOSITION AND NEW APPLICATIONS MADE.
      B. CRUSHED STONE SHALL BE MONITORED FOR WASH OUT AND SLIPPING DOWN SLOPE. IF EITHER OCCUR, NEW MATERIAL SHALL BE PROVIDED ON THE BARREN AREAS.
F. VEGETATIVE PRACTICE:
   1. FOR PERMANENT MEASURES AND PLANTINGS.
      A. LIMESTONE SHALL BE THOROUGHLY INCORPORATED INTO THE LOAM LAYER AT A RATE OF 3 TONS PER ACRE IN ORDER TO PROVIDE A PH VALUE OF 5.5 TO 6.5.
      B. FERTILIZER SHALL BE SPREAD ON THE TOP LAYER OF LOAM AND WORKED INTO THE SURFACE. FERTILIZER APPLICATION RATE SHALL BE 800 POUNDS PER ACRE OF 10-20-20 FERTILIZER.
      C. SOIL CONDITIONERS AND FERTILIZER SHALL BE APPLIED AT THE RECOMMENDED RATES AND SHALL BE THOROUGHLY WORKED INTO THE LOAM. LOAM SHALL BE RAKED UNTIL THE SURFACE IS FINELY PULVERIZED, SMOOTH AND EVEN, AND THEN COMPACTED TO AN EVEN SURFACE CONFORMING TO THE REQUIRED LINES AND GRADES WITH APPROVED ROLLERS WEIGHING BETWEEN 4.5 POUNDS AND 5.5 POUNDS PER INCH OF WIDTH.
      D. SEED SHALL BE SOWN AT THE RATE SHOWN BELOW. SOWING SHALL BE DONE ON A CALM, DRY DAY, PREFERABLY BY MACHINE, BUT IF BY HAND, ONLY BY EXPERIENCED WORKMEN. IMMEDIATELY BEFORE SEEDING, THE SOIL SHALL BE LIGHTLY RAKED. ONE HALF THE SEED SHALL BE SOWN IN ONE DIRECTION AND THE OTHER HALF AT RIGHT ANGLES TO THE ORIGINAL DIRECTION. IT SHALL BE LIGHTLY RAKED INTO THE SOIL TO A DEPTH NOT OVER 1/4 INCH AND ROLLED WITH A HAND ROLLER WEIGHING NOT OVER 100 POUNDS PER LINEAR FOOT OF WIDTH.
      E. HAY MULCH SHALL BE APPLIED IMMEDIATELY AFTER SEEDING AS INDICATED ABOVE.
      F. THE SURFACE SHALL BE WATERED AND KEPT MOIST WITH A FINE SPRAY AS REQUIRED, WITHOUT WASHING AWAY THE SOIL, UNTIL THE GRASS IS WELL ESTABLISHED. ANY AREAS WHICH ARE NOT SATISFACTORILY COVERED WITH GRASS SHALL BE RESEEDED, AND ALL NOXIOUS WEEDS REMOVED.
      G. THE CONTRACTOR SHALL PROTECT AND MAINTAIN THE SEEDED AREAS UNTIL ACCEPTED.
      H. A GRASS SEED MIXTURE CONTAINING THE FOLLOWING SEED REQUIREMENTS SHALL BE APPLIED AT THE INDICATED RATE:

SEEDING RATE:	
CREEPING RED FESCUE	XX LBS/ACRE
TALL FESCUE	XX LBS/ACRE
REDTOP	X LBS/ACRE

      IN NO CASE SHALL THE WEED CONTENT EXCEED ONE (1) PERCENT BY WEIGHT. ALL SEED SHALL COMPLY WITH STATE AND FEDERAL SEED LAWS. SEEDING SHALL BE DONE NO LATER THAN SEPTEMBER 15. IN NO CASE SHALL SEEDING TAKE PLACE OVER SNOW.
G. DORMANT SEEDING (SEPTEMBER 15 TO FIRST SNOWFALL)
   FOLLOW PERMANENT MEASURES SLOPE, LIME, FERTILIZER AND GRADING REQUIREMENTS. APPLY SEED MIXTURE AT TWICE THE INDICATED RATE. APPLY MULCH AS INDICATED FOR PERMANENT MEASURES.
H. STORM DRAIN INLET PROTECTION:
   1. SILT SACK
      A. SACK SHALL BE INSTALLED WITHIN CATCH BASIN, MAKING SURE EMPTY STRAPS ARE LAID FLAT OUTSIDE THE BASIN.
      B. SACK SHALL FIT TIGHTLY WITHIN THE BASIN TO PREVENT SEDIMENT FROM GOING THROUGH ANY GAPS.
      C. ALL STRUCTURES SHOULD BE INSPECTED AFTER EVERY RAINSTORM AND REPAIRS MADE AS NECESSARY.
      D. SEDIMENT SHOULD BE REMOVED FROM THE DEVICES AFTER THE SEDIMENT HAS REACHED A MAXIMUM OF ONE-THIRD THE DEPTH OF THE TRAP.
      E. SILT SACK SHALL BE REMOVED UPON THE COMPLETION OF PROJECT.
I. STABILIZED CONSTRUCTION ENTRANCE:
   1. SPECIFICATIONS
      A. AGGREGATE SIZE: USE TWO (2) INCHES STONE, OR RECLAIMED OR RECYCLED CONCRETE EQUIVALENT.
      B. AGGREGATE THICKNESS: NOT LESS THAN SIX (6) INCHES.
      C. WIDTH: TEN (10) FOOT MINIMUM, BUT NOT LESS THAN THE FULL WIDTH OF POINTS WHERE INGRESS OR EGRESS OCCURS.
      D. LENGTH: AS REQUIRED, BUT NOT LESS THAN FIFTY (50) FEET
      E. GEOTEXTILE: TO BE PLACED OVER THE ENTIRE AREA TO BE COVERED WITH AGGREGATE. PIPING OF SURFACE WATER UNDER ENTRANCE SHALL BE PROVIDED AS REQUIRED.
      F. CRITERIA FOR GEOTEXTILE: THE FABRICS SHALL BE TREVIA SPUNBOND 1135, MIRAFI 600X OR APPROVED EQUAL.
   2. MAINTENANCE
      A. THE ENTRANCE SHALL BE MAINTAINED IN A CONDITION WHICH WILL PREVENT TRACKING OF SEDIMENT ONTO PUBLIC RIGHT-OF-WAY. WHEN WASHING IS REQUIRED, IT SHALL BE DONE ON A AREA STABILIZED WITH AGGREGATE WHICH DRAINS INTO AN APPROVED SEDIMENT TRAPPING DEVICE. ALL SEDIMENT SHALL BE PREVENTED FROM ENTERING STORM DRAINS, DITCHES OR WATERWAYS.

TIMING OF CONTROLS/MEASURES
A. THE MAXIMUM AREA TO BE DISTURBED AT ONE TIME SHALL BE KEPT UNDER FIVE (5) ACRES. A PHASING PLAN DESCRIBING THE AREAS TO BE DISTURBED SHALL BE SUBMITTED TO THE DESIGN ENGINEER AND NHDES. AN INDEPENDENT MONITORING COMPANY SHALL BE HIRED BY THE CONTRACTOR TO MONITOR ALL EROSION CONTROL DEVICES.
B. AS INDICATED IN THE SEQUENCE OF MAJOR ACTIVITIES THE EROSION CONTROL DEVICES SHALL BE INSTALLED PRIOR TO COMMENCING ANY CLEARING OR GRADING OF THE SITE. STRUCTURAL CONTROLS SHALL BE INSTALLED CONCURRENTLY WITH THE APPLICABLE ACTIVITY. AREAS WHERE CONSTRUCTION ACTIVITY TEMPORARILY CEASES FOR MORE THAN TWENTY ONE (21) DAYS WILL BE STABILIZED WITH A TEMPORARY SEED AND MULCH WITHIN FOURTEEN (14) DAYS OF THE LAST DISTURBANCE. WHEN CONSTRUCTION ACTIVITY PERMANENTLY OR TEMPORARILY CEASES WITHIN 100 FEET OF ANY WETLAND OR STREAM, THE AREA SHALL BE STABILIZED WITHIN SEVEN (7) DAYS OR PRIOR TO A RAIN EVENT. ONCE CONSTRUCTION ACTIVITY CEASES PERMANENTLY IN AN AREA, SILT FENCES AND HAYBALE BARRIERS AND ANY EARTH/DIKES WILL BE REMOVED ONCE PERMANENT MEASURES ARE ESTABLISHED.

WASTE DISPOSAL
A. WASTE MATERIALS:
   1. ALL WASTE MATERIALS WILL BE COLLECTED AND STORED IN SECURELY LIDDED RECEPTACLES. ALL TRASH AND CONSTRUCTION DEBRIS FROM THE SITE WILL BE DEPOSITED IN A DUMPSTER. NO CONSTRUCTION WASTE MATERIALS WILL BE BURIED ON SITE. ALL PERSONNEL WILL BE INSTRUCTED REGARDING THE CORRECT PROCEDURE FOR WASTE DISPOSAL BY THE SUPERINTENDENT.
B. HAZARDOUS WASTE:
   1. ALL HAZARDOUS WASTE MATERIALS WILL BE DISPOSED OF IN THE MANNER SPECIFIED BY LOCAL OR STATE REGULATION OR BY THE MANUFACTURER. SITE PERSONNEL WILL BE INSTRUCTED IN THESE PRACTICES BY THE SUPERINTENDENT.
C. SANITARY WASTE:
   1. ALL SANITARY WASTE WILL BE COLLECTED FROM THE PORTABLE UNITS A MINIMUM OF ONCE PER WEEK BY A LICENSED SANITARY WASTE MANAGEMENT CONTRACTOR.

SPILL PREVENTION
A. MATERIAL MANAGEMENT PRACTICES:
   THE FOLLOWING ARE THE MATERIAL MANAGEMENT PRACTICES THAT WILL BE USED TO REDUCE THE RISK OF SPILLS OR OTHER ACCIDENTAL EXPOSURE OF MATERIALS AND SUBSTANCES DURING CONSTRUCTION TO STORMWATER RUNOFF:
   1. GOOD HOUSEKEEPING:
      THE FOLLOWING GOOD HOUSEKEEPING PRACTICES WILL BE FOLLOWED ON SITE DURING THE CONSTRUCTION PROJECT:
      A. AN EFFORT WILL BE MADE TO STORE ONLY SUFFICIENT AMOUNTS OF PRODUCTS TO DO THE JOB.
      B. ALL MATERIALS STORED ON SITE WILL BE STORED IN A NEAT, ORDERLY MANNER IN THEIR PROPER (ORIGINAL IF POSSIBLE) CONTAINERS AND, IF POSSIBLE, UNDER A ROOF OR OTHER ENCLOSURE.
      C. MANUFACTURER'S RECOMMENDATIONS FOR PROPER USE AND DISPOSAL WILL BE FOLLOWED.
      D. THE SITE SUPERINTENDENT WILL INSPECT DAILY TO ENSURE PROPER USE AND DISPOSAL OF MATERIALS.
      E. SUBSTANCES WILL NOT BE MIXED WITH ONE ANOTHER UNLESS RECOMMENDED BY THE MANUFACTURER.
      F. WHENEVER POSSIBLE ALL OF A PRODUCT WILL BE USED UP BEFORE DISPOSING OF THE CONTAINER.
   2. HAZARDOUS PRODUCTS:
      THE FOLLOWING PRACTICES WILL BE USED TO REDUCE THE RISKS ASSOCIATED WITH HAZARDOUS MATERIALS:
      A. PRODUCTS WILL BE KEPT IN THEIR ORIGINAL CONTAINERS UNLESS THEY ARE NOT RESEALABLE.
      B. ORIGINAL LABELS AND MATERIAL SAFETY DATA WILL BE RETAINED FOR IMPORTANT PRODUCT INFORMATION.
      C. SURPLUS PRODUCT THAT MUST BE DISPOSED OF WILL BE DISCARDED ACCORDING TO THE MANUFACTURER'S RECOMMENDED METHODS OF DISPOSAL.
   3. PRODUCT SPECIFICATION PRACTICES:
      THE FOLLOWING PRODUCT SPECIFIC PRACTICES WILL BE FOLLOWED ON SITE:
      A. PETROLEUM PRODUCTS:
         ALL ON SITE VEHICLES WILL BE MONITORED FOR LEAKS AND RECEIVE REGULAR PREVENTIVE MAINTENANCE TO REDUCE LEAKAGE. PETROLEUM PRODUCTS WILL BE STORED IN TIGHTLY SEALED CONTAINERS WHICH ARE CLEARLY LABELED. ANY ASPHALT BASED SUBSTANCES USED ON SITE WILL BE APPLIED ACCORDING TO THE MANUFACTURER'S RECOMMENDATIONS.
      B. FERTILIZERS:
         FERTILIZERS USED WILL BE APPLIED ONLY IN THE MINIMUM AMOUNTS DIRECTED BY THE SPECIFICATIONS. ONCE APPLIED FERTILIZER WILL BE WORKED INTO THE SOIL TO LIMIT EXPOSURE TO STORMWATER. STORAGE WILL BE IN A COVERED SHED OR ENCLOSED TRAILERS. THE CONTENTS OF ANY PARTIALLY USED BAGS OF FERTILIZER WILL BE TRANSFERRED TO A SEALABLE PLASTIC BIN TO AVOID SPILLS.
      C. PAINTS:
         ALL CONTAINERS WILL BE TIGHTLY SEALED AND STORED WHEN NOT REQUIRED FOR USE. EXCESS PAINT WILL NOT BE DISCHARGED TO THE STORM SEWER SYSTEM BUT WILL BE DISPOSED OF PROPERLY ACCORDING TO MANUFACTURER'S INSTRUCTIONS OR STATE AND LOCAL REGULATIONS.
   4. SPILL CONTROL PRACTICES:
      IN ADDITION TO GOOD HOUSEKEEPING AND MATERIAL MANAGEMENT PRACTICES DISCUSSED IN THE PREVIOUS SECTION THE FOLLOWING PRACTICES WILL BE FOLLOWED FOR SPILL PREVENTION AND CLEANUP:
      A. MANUFACTURER'S RECOMMENDED METHODS FOR SPILL CLEANUP WILL BE CLEARLY POSTED AND SITE PERSONNEL WILL BE MADE AWARE OF THE PROCEDURES AND THE LOCATION OF THE INFORMATION AND CLEANUP SUPPLIES.
      B. MATERIALS AND EQUIPMENT NECESSARY FOR SPILL CLEANUP WILL BE KEPT IN THE MATERIAL STORAGE AREA ON SITE. EQUIPMENT AND MATERIALS WILL INCLUDE BUT NOT BE LIMITED TO BROOMS, DUSTPANS, MOPS, RAGS, GLOVES, GOGGLES, KITTY LITTER, SAND, SAWDUST AND PLASTIC OR METAL TRASH CONTAINERS SPECIFICALLY FOR THIS PURPOSE.
      C. ALL SPILLS WILL BE CLEANED UP IMMEDIATELY AFTER DISCOVERY.
      D. THE SPILL AREA WILL BE KEPT WELL VENTILATED AND PERSONNEL WILL WEAR APPROPRIATE PROTECTIVE CLOTHING TO PREVENT INJURY FROM CONTACT WITH A HAZARDOUS SUBSTANCE.
      E. SPILLS OF TOXIC OR HAZARDOUS MATERIAL WILL BE REPORTED TO THE APPROPRIATE STATE OR LOCAL GOVERNMENT AGENCY, REGARDLESS OF THE SIZE.
      F. THE SPILL PREVENTION PLAN WILL BE ADJUSTED TO INCLUDE MEASURES TO PREVENT THIS TYPE OF SPILL FROM RECURRING AND HOW TO CLEANUP THE SPILL IF IT RECURS. A DESCRIPTION OF THE SPILL, ITS CAUSE, AND THE CLEANUP MEASURES WILL BE INCLUDED.
      G. THE SITE SUPERINTENDENT RESPONSIBLE FOR DAY-TO-DAY SITE OPERATIONS WILL BE THE SPILL PREVENTION AND CLEANUP COORDINATOR.
   5. VEHICLE FUELING AND MAINTENANCE PRACTICE:
      A. EFFORTS SHOULD BE MADE TO PERFORM EQUIPMENT/VEHICLE FUELING AND MAINTENANCE AT AN OFF-SITE FACILITY.
      B. CONTRACTOR SHALL PROVIDE AN ON-SITE FUELING AND MAINTENANCE AREA THAT IS CLEAN AND DRY.
      C. IF POSSIBLE KEEP AREA COVERED.
      D. KEEP A SPILL KIT AT THE FUELING AND MAINTENANCE AREA.
      E. VEHICLES SHALL BE INSPECTED REGULARLY FOR LEAKS AND DAMAGE.
      F. USE DRIP PANS, DRIP CLOTHS, OR ABSORBENT PADS WHEN REPLACING SPENT FLUID.

DUST CONTROL:
THE CONTRACTOR SHALL BE RESPONSIBLE TO CONTROL DUST THROUGHOUT THE CONSTRUCTION PERIOD. DUST CONTROL METHODS SHALL INCLUDE, BUT BE NOT LIMITED TO SPRINKLING WATER ON EXPOSED AREAS, COVERING LOADED DUMP TRUCKS LEAVING THE SITE, AND TEMPORARY MULCHING. DUST CONTROL MEASURES SHALL BE UTILIZED SO AS TO PREVENT THE MIGRATION OF DUST FROM THE SITE TO ABUTTING AREAS.

CONCRETE WASHOUT AREA:
1. THE CONCRETE CONTRACTOR SHOULD BE ENCOURAGED WHERE POSSIBLE, TO USE WASHOUT FACILITIES AT THEIR OWN PLANT OR DISPATCH FACILITY.
2. IF IT IS NECESSARY, SITE CONTRACTOR SHALL DESIGNATE SPECIFIC WASHOUT AREAS AND DESIGN FACILITIES TO HANDLE ANTICIPATED WASHOUT WATER.
3. WASHOUT AREAS SHOULD ALSO BE PROVIDED FOR PAINT AND STUCCO OPERATIONS.
4. ATTEMPTS SHOULD BE MADE TO LOCATE WASHOUT AREA A LEAST 50 YARDS AWAY FROM STORM DRAINS AND WATER WAYS WHENEVER POSSIBLE.
5. INSPECT WASHOUT FACILITIES DAILY TO DETECT LEAKS OR TEARS AND TO IDENTIFY WHEN MATERIALS NEED TO BE REMOVED.

ALLOWABLE NON-STORMWATER DISCHARGES:
1. DISCHARGES FROM FIRE-FIGHTING ACTIVITIES
2. FIRE HYDRANT FLUSHINGS
3. WATERS USED TO WASH VEHICLES WHERE DETERGENTS ARE NOT USED
4. WATER USED TO CONTROL DUST
5. POTABLE WATER INC. UNCONTAMINATED WATER LINE FLUSHINGS
6. ROUTINE EXTERNAL BUILDING WASH DOWN -NO DETERGENTS
7. PAVEMENT WASH WATERS -NO SPILLS OR DETERGENTS
8. UNCONTAMINATED AIR CONDITIONING/COMPRESSOR CONDENSATE
9. UNCONTAMINATED GROUND WATER OR SPRING WATER
10. FOUNDATION OR FOOTING DRAINS -NOT CONTAMINATED
11. UNCONTAMINATED EXCAVATION DEWATERING
12. LANDSCAPE IRRIGATION

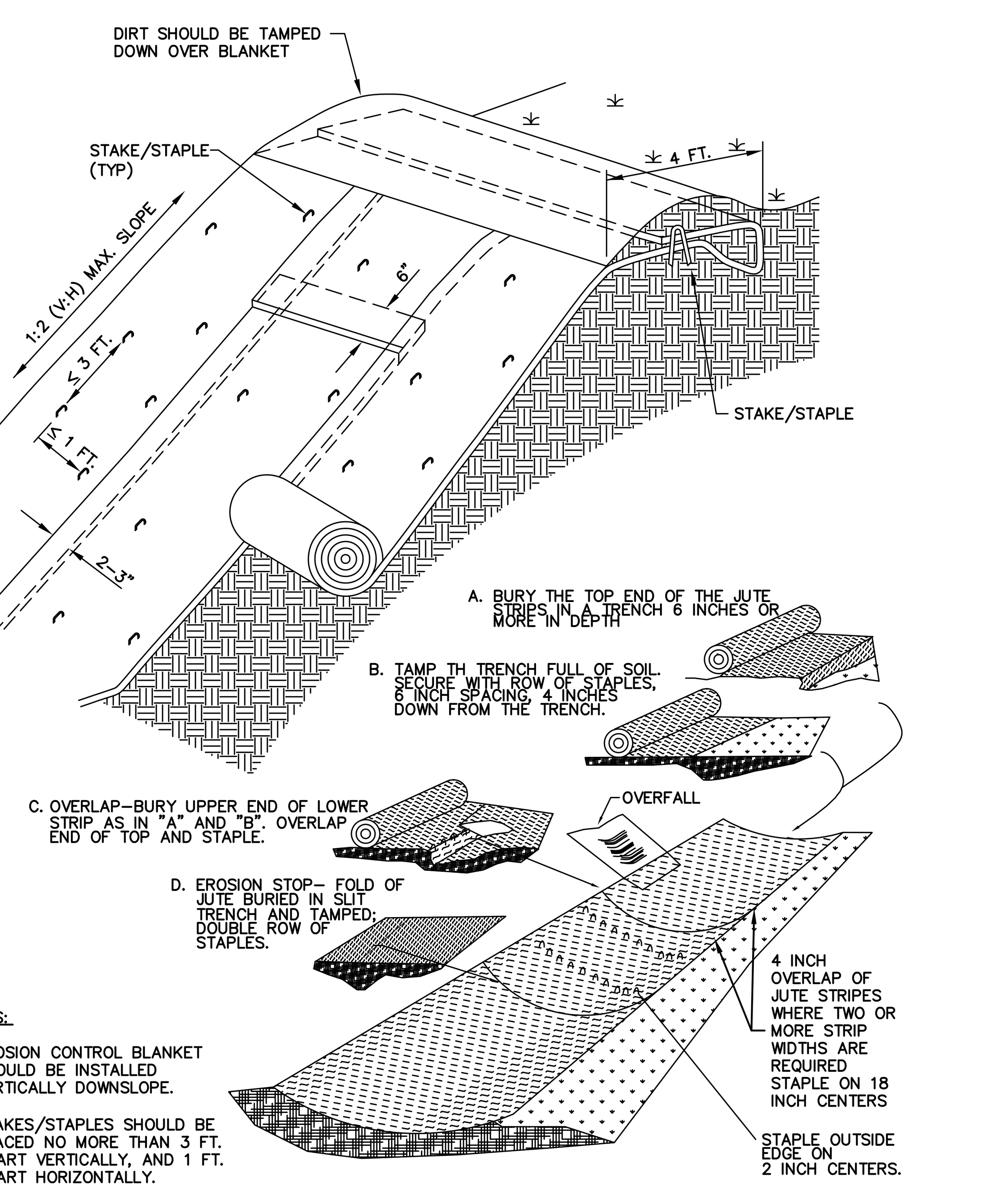

NOTES:
1. EROSION CONTROL BLANKET SHOULD BE INSTALLED VERTICALLY DOWNSLOPE.
2. STAKES/STAPLES SHOULD BE PLACED NO MORE THAN 3 FT. APART VERTICALLY, AND 1 FT. APART HORIZONTALLY.
3. SLOPE SURFACE SHOULD BE FREE OF STICKS, ROCKS, AND OTHER OBSTRUCTIONS.
4. BLANKETS SHOULD BE ROLLED OUT LOOSELY AND STAKED/STAPLED TO MAINTAIN DIRECT SOIL CONTACT. DO NOT STRETCH THE BLANKETS.

JUTE MATTING
(EXCELSIOR MATTING) DETAIL
NOT TO SCALE

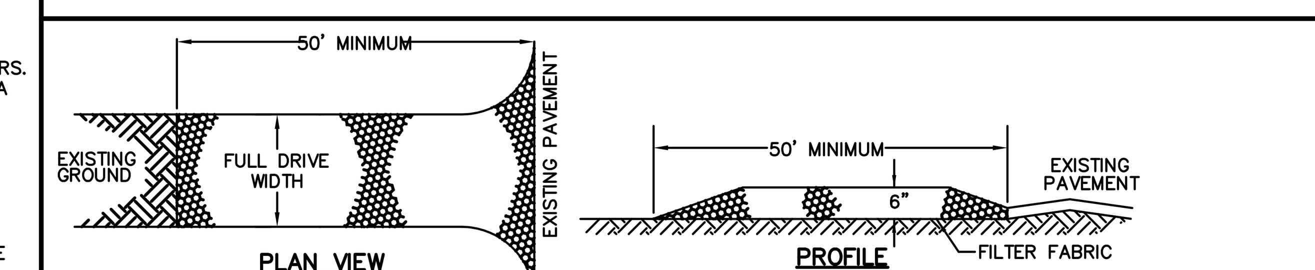

NOTE:
1. SEE EROSION CONTROL NOTES FOR MATERIAL, INSTALLATION AND MAINTENANCE REQUIREMENTS.

STABILIZED CONSTRUCTION ENTRANCE
NOT TO SCALE

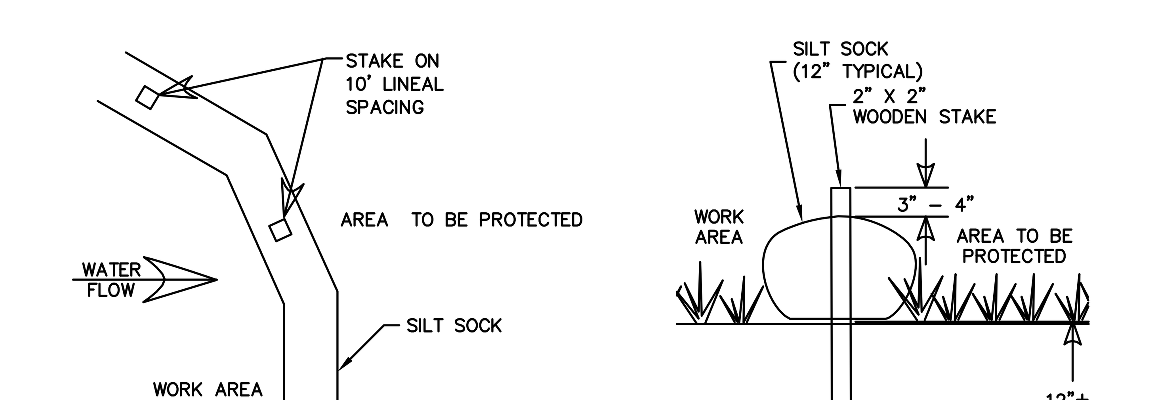

SILT SOCK
NOT TO SCALE

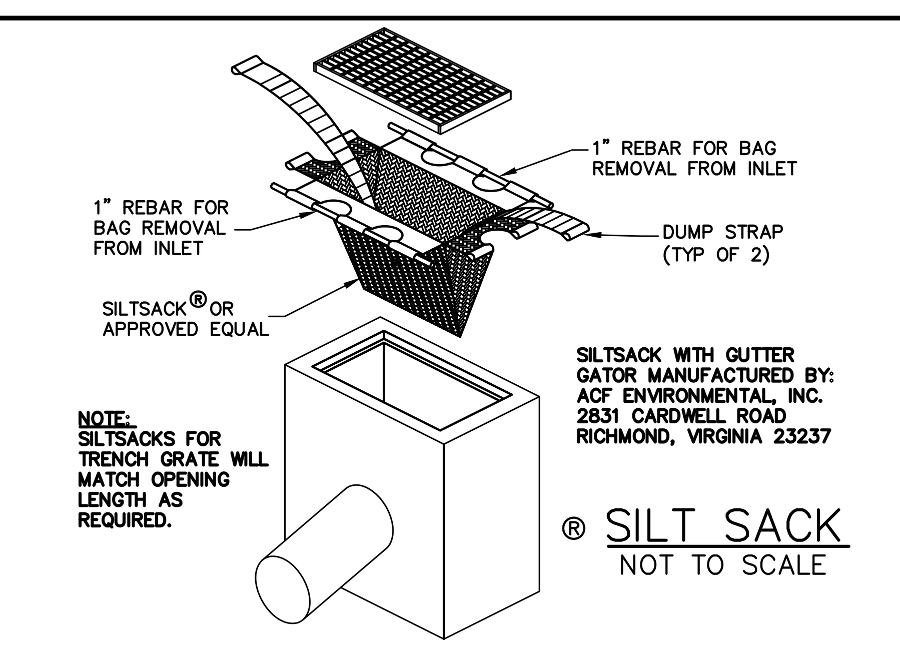

NOTE:
SILTSACKS FOR TRENCH GRATE WILL MATCH OPENING LENGTH AS REQUIRED.

SILTSACK WITH GUTTER GATOR MANUFACTURED BY: ACF ENVIRONMENTAL, INC. 2831 CARDWELL ROAD RICHMOND, VIRGINIA 23237

® SILT SACK
NOT TO SCALE

Tighe&Bond
Consulting Engineers
www.tighebond.com

STATE OF MAINE
Bradlee Mezquita 9410
LICENSED PROFESSIONAL ENGINEER
4-3-15

Jewish Community Alliance of Southern Maine

Proposed Neighborhood Center

Portland, Maine

April 03, 2015

Mark	Date	Description

PROJECT NO:	J-0096
FILE:	J0096-DETAILS.dwg
DRAWN BY:	GWH
CHECKED:	BLM
APPROVED BY:	BLM

EROSION CONTROL NOTES AND DETAILS SHEET

SCALE: AS SHOWN

C-5

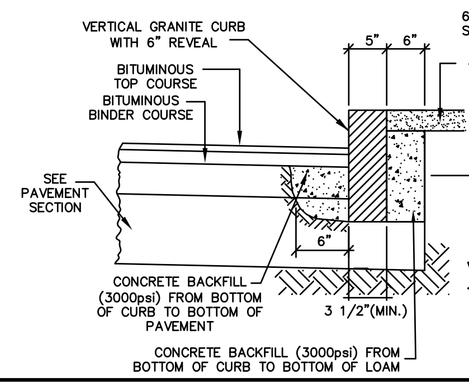

RADIUS	MAX. LENGTH
	USE CURVED CURB
<20'	3'
21'	4'
22'–28'	4'
29'–35'	5'
36'–42'	6'
43'–49'	7'
50'–56'	8'
57'–60'	9'
OVER 60'	10'

NOTES:
1. SEE SITE PLAN FOR LIMITS OF CURBING.
2. ADJOINING STONES SHALL HAVE THE SAME OR APPROXIMATELY THE SAME LENGTH.
3. MINIMUM LENGTH OF CURB STONES = 3'
4. MAXIMUM LENGTH OF CURB STONES = 10'
5. MAXIMUM LENGTH OF STRAIGHT CURB STONES LAID ON CURVES (SEE CHART).
6. ALL RADII 20 FEET AND SMALLER SHALL BE CONSTRUCTED USING CURVED SECTIONS
7. JOINTS BETWEEN STONES SHALL BE MORTARED.

VERTICAL GRANITE CURB
NOT TO SCALE

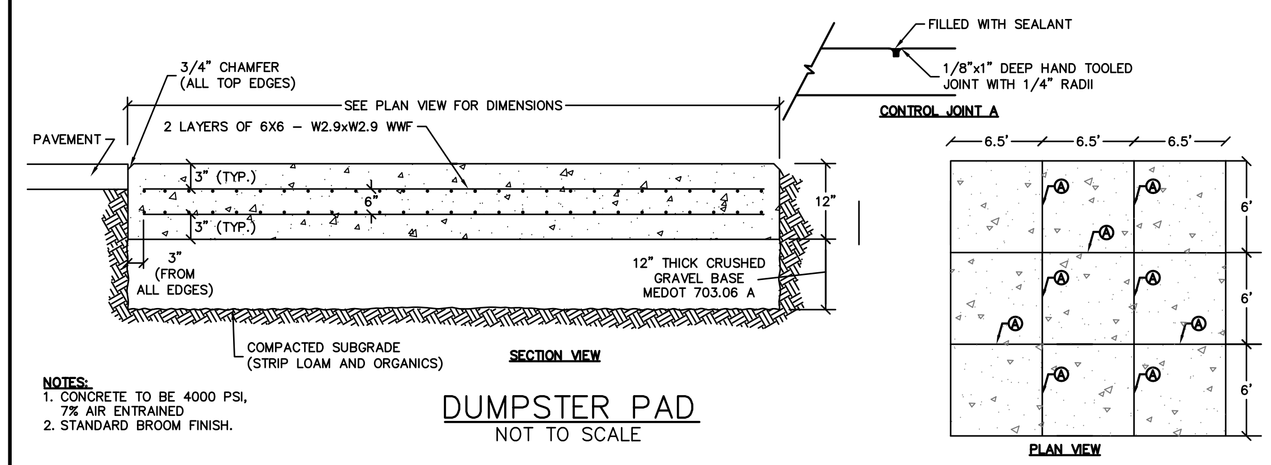

NOTES:
1. CONCRETE TO BE 4000 PSI, 7% AIR ENTRAINED
2. STANDARD BROOM FINISH.

DUMPSTER PAD
NOT TO SCALE

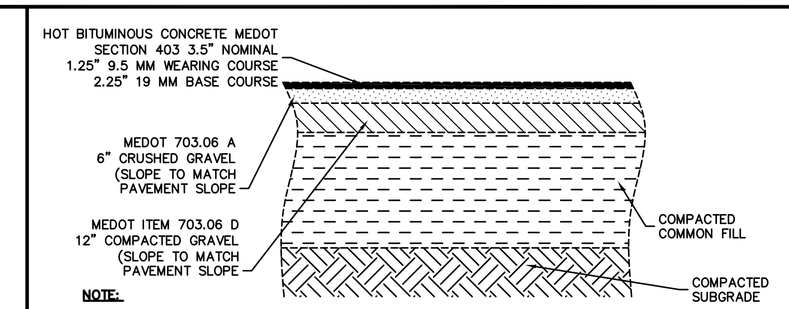

NOTE:
1. SEE SITE PLAN FOR PAVEMENT WIDTH AND LOCATION.
2. SEE GRADING, DRAINAGE AND EROSION CONTROL PLAN FOR PAVEMENT SLOPE AND CROSS-SLOPE.
3. A TACK COAT SHALL BE PLACED ON TOP OF BINDER COURSE PAVEMENT PRIOR TO PLACING WEARING COURSE.
4. CONTRACTOR SHALL HAVE THE OPTION OF RECLAIMING THE EXISTING PAVEMENT AND REMOVING THE MATERIAL, THEN REUSING THE RECLAIMED MATERIAL AS A PAVEMENT SUBBASE.

STANDARD DUTY PAVEMENT SECTION
NOT TO SCALE

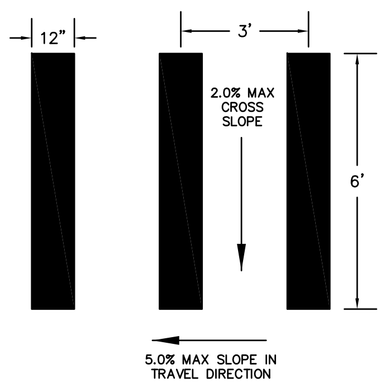

NOTE:
ALL PAINT SHALL BE FAST DRYING TRAFFIC PAINT, MEETING THE REQUIREMENTS OF AASHTO M248–TYPE F. PAINT SHALL BE APPLIED AS SPECIFIED BY MANUFACTURER.

CROSSWALK STRIPING
NOT TO SCALE

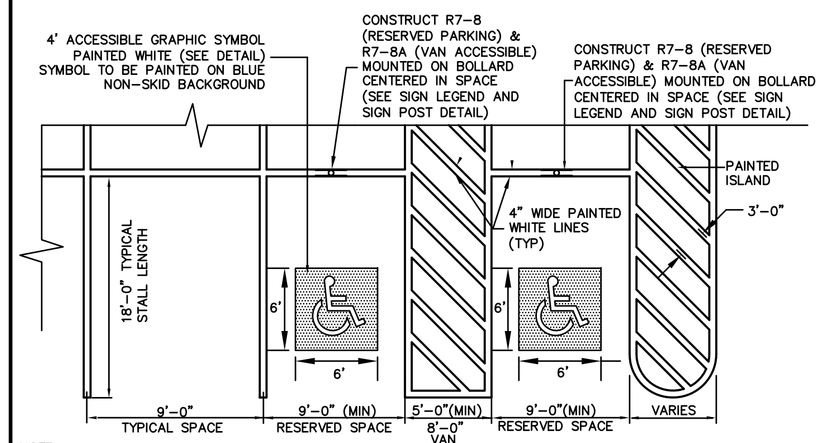

NOTE:
1. ALL PAINT SHALL BE FAST DRYING TRAFFIC PAINT, MEETING THE REQUIREMENTS OF AASHTO M248–TYPE F. PAINT SHALL BE APPLIED AS SPECIFIED BY MANUFACTURER.
2. SYMBOLS & PARKING STALLS SHALL CONFORM TO THE REQUIREMENTS OF THE AMERICANS WITH DISABILITIES ACT AND LOCAL AND STATE REQUIREMENTS.
3. FINISH PAVEMENT GRADES AT ALL HANDICAP ACCESSIBLE STALLS AND PAINTED ACCESS AISLES SHALL NOT EXCEED 2% IN ANY DIRECTION.

STALL STRIPING–SINGLE STRIPE
NOT TO SCALE

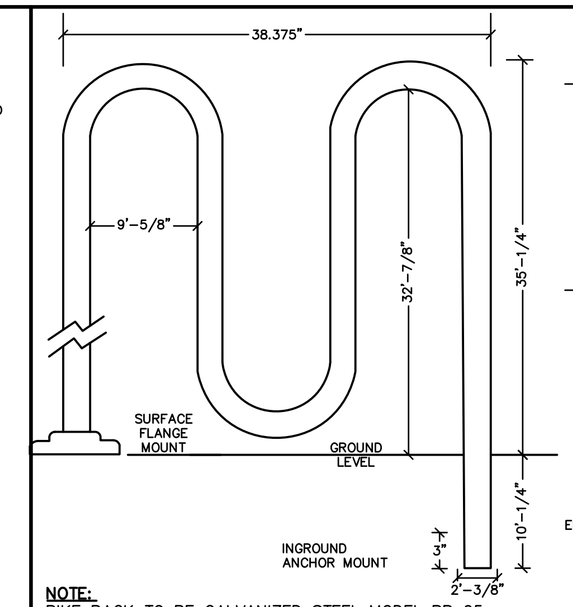

NOTE:
BIKE RACK TO BE GALVANIZED STEEL MODEL RB 05 (5 BICYCLES) AS MANUFACTURED BY AAA RIBBON RACK CO. INSTALL PER MANUFACTURERS RECOMMENDATIONS.

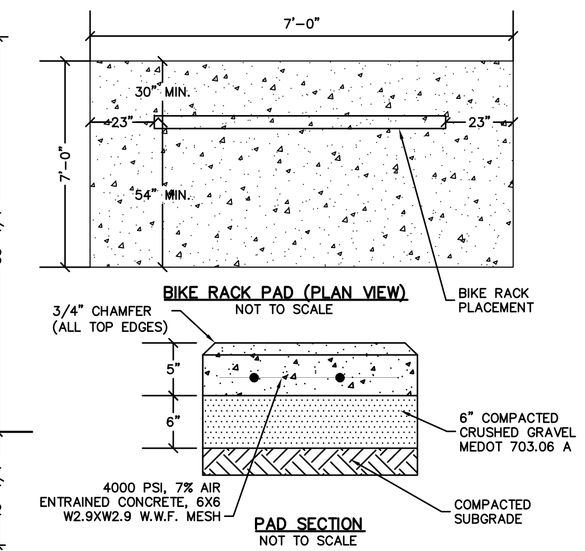

BIKE RACK AND PAD DETAIL (MODEL RB 05)
NOT TO SCALE

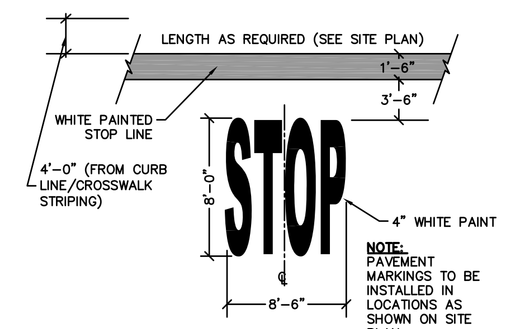

NOTE:
PAVEMENT MARKINGS TO BE INSTALLED IN LOCATIONS AS SHOWN ON SITE PLAN.

STOP BAR AND LEGEND
NOT TO SCALE

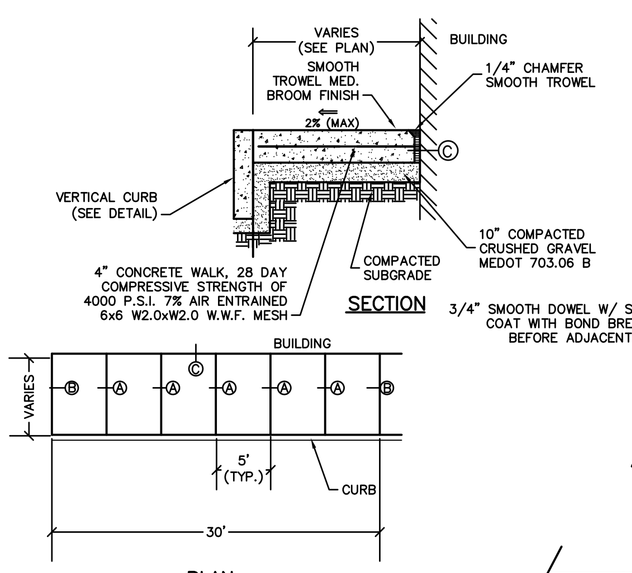

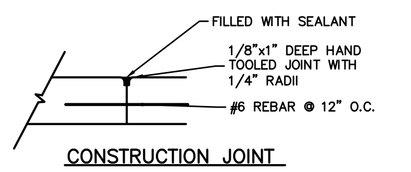

CONSTRUCTION JOINT

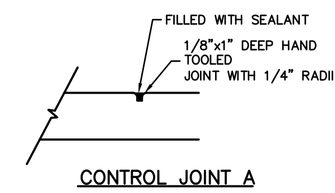

CONTROL JOINT A

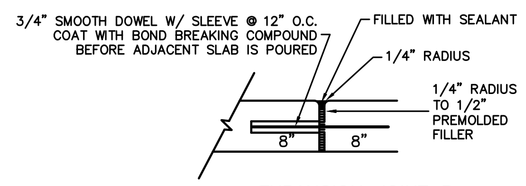

EXPANSION JOINT B

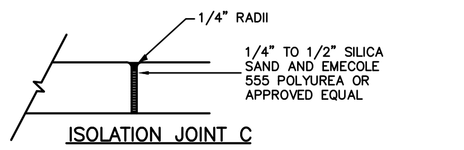

ISOLATION JOINT C

CONCRETE SIDEWALK WITH GRANITE CURB
NOT TO SCALE

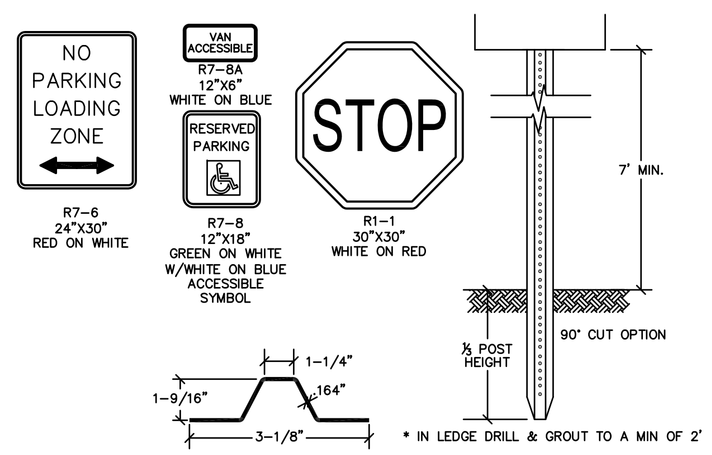

NOTE:
ALL SIGNS TO BE CONSTRUCTED PER THE LATEST EDITION OF THE FHWA STANDARD HIGHWAY SIGNS MANUAL AND INSTALLED AS INDICATED IN THE MANUAL ON UNIFORM TRAFFIC CONTROL DEVICES, LATEST EDITION.

LENGTH: AS REQUIRED
WEIGHT PER LINEAR FOOT: 2.50 LBS (MIN.)
HOLES: 3/8" DIAMETER, 1" C–C FULL LENGTH
STEEL: SHALL CONFORM TO ASTM A–499 (GRADE 60) OR ASSTM A–576 (GRADE 1070 – 1080)
FINISH: SHALL BE PAINTED WITH TWO COATS OF AN APPROVED MEDIUM GREEN BAKED ON OR DRIED, PAINT OF WEATHER RESISTANT QUALITY. ALL FABRICATION SHALL BE COMPLETE BEFORE PAINTING.

SIGN LEGEND & SIGN POST
NOT TO SCALE

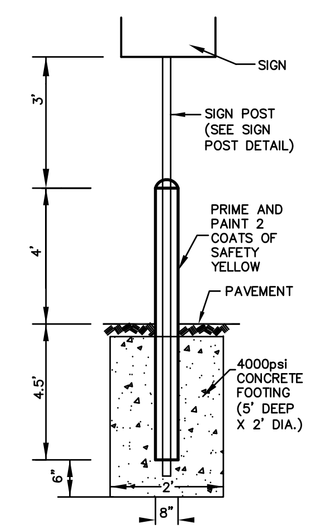

SIGN BOLLARD
NOT TO SCALE

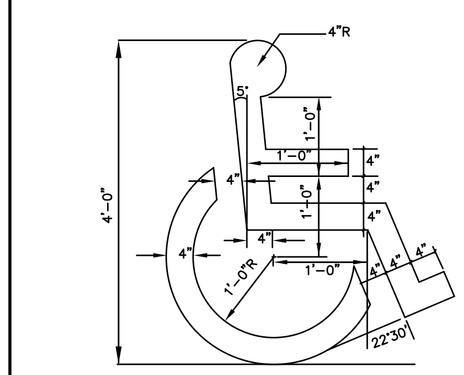

NOTES:
1. SYMBOL SHALL BE CONSTRUCTED IN ALL ACCESSIBLE SPACES USING FAST DRYING TRAFFIC PAINT, MEETING THE REQUIREMENTS OF AASHTO M248–TYPE F. PAINT SHALL BE APPLIED AS SPECIFIED BY MANUFACTURER.
2. SYMBOL SHALL BE CONSTRUCTED TO THE LATEST ADA, STATE AND LOCAL REQUIREMENTS.

ACCESSIBLE SYMBOL
NOT TO SCALE

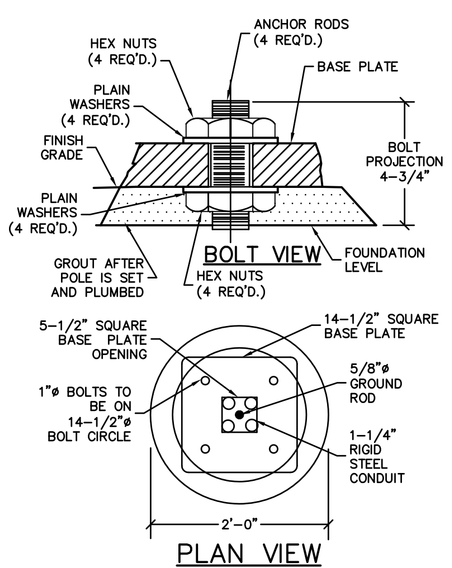

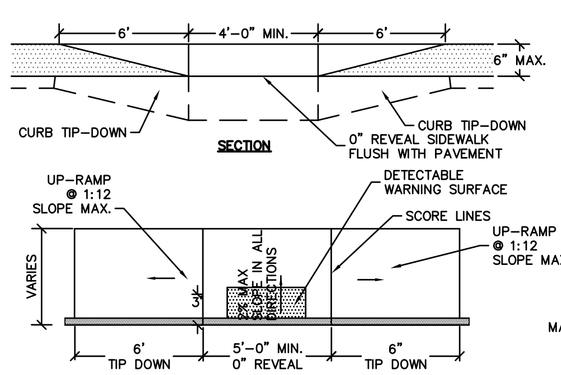

NOTES:
1. RAMPS SHALL BE CONSTRUCTED IN ACCORDANCE WITH THE AMERICANS WITH DISABILITIES ACT AND LOCAL AND STATE REQUIREMENTS
2. PROVIDE 6" COMPACTED CRUSHED GRAVEL BASE BENEATH RAMPS
3. DETECTABLE WARNING STRIP SHALL BE ADA SOLUTIONS, INC. CAST IN PLACE RAMP. INSTALL PER MANUFACTURER'S RECOMMENDATIONS.

CONCRETE WHEELCHAIR ACCESSIBLE RAMP
NOT TO SCALE

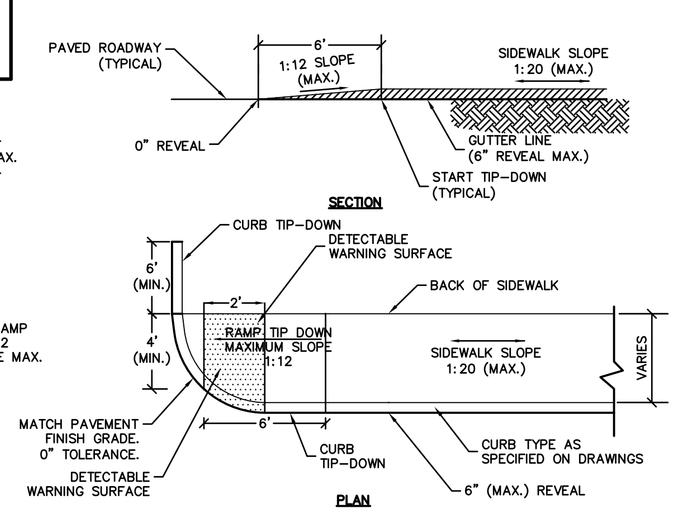

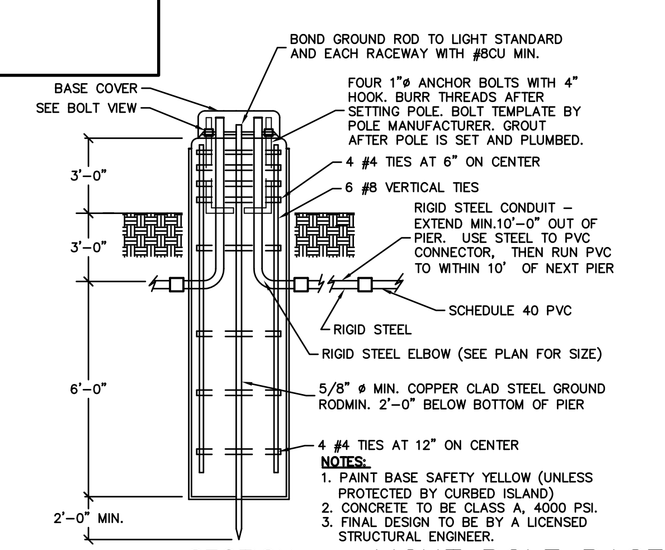

NOTES:
1. PAINT BASE SAFETY YELLOW (UNLESS PROTECTED BY CURBED ISLAND)
2. CONCRETE TO BE CLASS A, 4000 PSI.
3. FINAL DESIGN TO BE BY A LICENSED STRUCTURAL ENGINEER.

LIGHT POLE BASE
NOT TO SCALE

Tighe&Bond
Consulting Engineers
www.tighebond.com

STATE OF MAINE
Bradlee Mazzotta
9410
LICENSED
PROFESSIONAL ENGINEER
5-8-15

Jewish Community Alliance of Southern Maine

Proposed Neighborhood Center

Portland, Maine

April 03, 2015

Mark	Date	Description
1.	5/8/15	REVISED FOR PB WORKSHOP

PROJECT NO:	J-0096
FILE:	J0096-DETAILS.dwg
DRAWN BY:	GWH
CHECKED:	BLM
APPROVED BY:	BLM

DETAILS SHEET

SCALE: AS SHOWN

C-6

May 08, 2015-4:10pm Plotted By: gwh
Tighe & Bond, Inc. J:\J0096 Jewish Community Alliance\DWG-CAD\DESIGN\J0096-DETAILS.dwg Layout: C-6

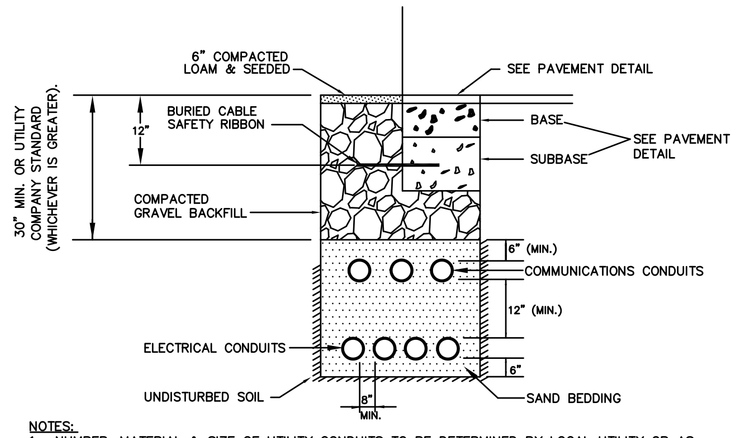

NOTES:

1. NUMBER, MATERIAL & SIZE OF UTILITY CONDUITS TO BE DETERMINED BY LOCAL UTILITY OR AS SHOWN ON ELECTRICAL DRAWINGS. CONTRACTOR TO PROVIDE ONE SPARE CONDUIT FOR EACH UTILITY TO BUILDING.
2. DIMENSIONS SHOWN REPRESENT OWNERS MINIMUM REQUIREMENTS. ACTUAL DIMENSIONS MAY BE GREATER BASED ON UTILITY COMPANY STANDARDS, BUT SHALL NOT BE LESS THAN THOSE SHOWN.
3. NO CONDUIT RUN SHALL EXCEED 360 DEGREES IN TOTAL BENDS.
4. A SUITABLE PULLING STRING, CAPABLE OF 200 POUNDS OF PULL, MUST BE INSTALLED IN THE CONDUIT BEFORE UTILITY COMPANY IS NOTIFIED TO INSTALL CABLE. THE STRING SHOULD BE BLOWN INTO THE CONDUIT AFTER THE RUN IS ASSEMBLED TO AVOID BONDING THE STRING TO THE CONDUIT.
5. UTILITY COMPANY MUST BE GIVEN THE OPPORTUNITY TO INSPECT THE CONDUIT PRIOR TO BACKFILL. THE CONTRACTOR IS RESPONSIBLE FOR ALL REPAIRS SHOULD THE UTILITY COMPANY BE UNABLE TO INSTALL ITS CABLE IN A SUITABLE MANNER.
6. ALL CONDUIT INSTALLATIONS MUST CONFORM TO THE CURRENT EDITION OF THE NATIONAL ELECTRIC SAFETY CODE, STATE AND LOCAL CODES AND ORDINANCES, AND WHERE APPLICABLE, THE NATIONAL ELECTRIC CODE.
7. ALL 90° SWEEPS WILL BE MADE USING RIGID GALVANIZED STEEL. SWEEPS WITH A 36 TO 48 INCH RADIUS.

ELECTRICAL AND COMMUNICATION CONDUIT

NOT TO SCALE

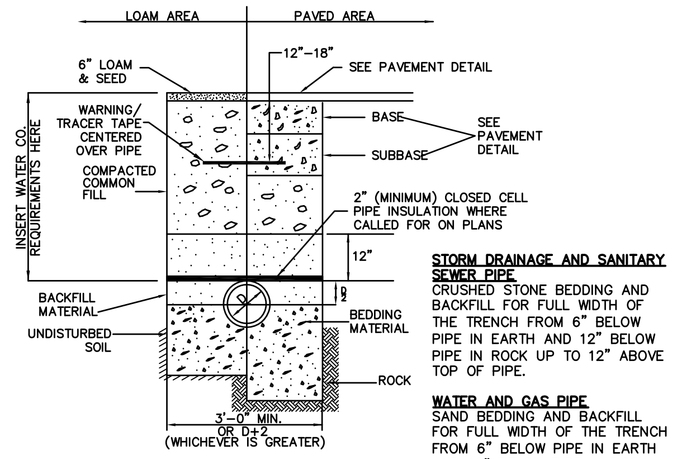

STORM DRAINAGE AND SANITARY SEWER PIPE
CRUSHED STONE BEDDING AND BACKFILL FOR FULL WIDTH OF THE TRENCH FROM 6" BELOW PIPE IN EARTH AND 12" BELOW PIPE IN ROCK UP TO 12" ABOVE TOP OF PIPE.

WATER AND GAS PIPE
SAND BEDDING AND BACKFILL FOR FULL WIDTH OF THE TRENCH FROM 6" BELOW PIPE IN EARTH AND 12" BELOW PIPE IN ROCK UP TO 12" ABOVE TOP OF PIPE.

UTILITY TRENCH

NOT TO SCALE

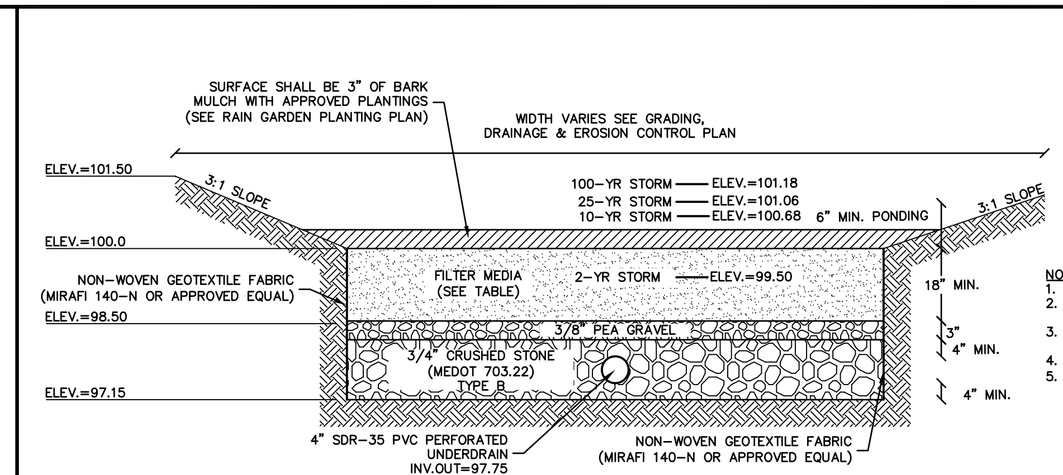

FILTER MEDIA COMPOSITION:

COMPONENT MATERIAL	PERCENT OF MIXTURE BY VOLUME	GRADATION OF MATERIAL SIEVE NO.	PERCENT PASSING
ASTM C-33 CONCRETE SAND	50-55	SEE NOTE #5	
LOAMY SAND TOPSOIL	20-30	200	15-25
MODERATELY FINE SHREDDED BARK OR WOOD FIBER MULCH	20-30	200	5 MAX.

NOTES:

1. BARK MULCH SHALL BE AGED A MINIMUM OF 12 MONTHS AND SHALL NOT FLOAT.
2. UNDERDRAINED SOIL FILTER SHALL NOT BE PLACED INTO SERVICE UNTIL THE PRACTICE HAS BEEN PLANTED AND ITS CONTRIBUTING AREAS HAVE BEEN FULLY STABILIZED.
3. DO NOT TRAFFIC EXPOSED SOIL SURFACES WITH CONSTRUCTION EQUIPMENT. CONTRACTOR SHALL KEEP ALL EXCAVATION EQUIPMENT OUTSIDE OF THE LIMIT OF THE UNDERDRAINED SOIL FILTER.
4. SEE GRADING, DRAINAGE & EROSION CONTROL PLAN FOR LOCATIONS, LAYOUTS, AND ELEVATIONS.
5. THE SAND PORTION OF THE FILTER MEDIA SHALL MEET THE FOLLOWING GRADATION (ASTM C-33):

SIEVE SIZE	PERCENT PASSING
1/4"	100
#4	95-100
#8	80-100
#16	50-85
#30	25-60
#50	5-30
#100	0-10

6. THE ESTIMATED SEASONAL HIGH WATER TABLE (ESHWT) IS NOT ANTICIPATED TO BE WITHIN 1 FOOT OF THE BOTTOM OF THE RAIN GARDENS. CONTRACTOR TO CONTACT ENGINEER TO INSPECT SUBGRADE AND VERIFY ESHWT.
7. CONTRACTOR SHALL CONDUCT INFILTRATION TESTS AND REPORT RESULTS TO ENGINEER PRIOR TO CONSTRUCTION.

CROSS SECTION

UNDERDRAINED SOIL FILTER DETAIL

NOT TO SCALE

NOTES:

1. STONE SIZE AND MAT DIMENSIONS DETAILED ON PLANS.

2. STONE SHALL CONSIST OF SUB-ANGULAR FIELD STONE OR ROUGH UNHEWN QUARRY STONE OF APPROXIMATELY RECTANGULAR SHAPE. FLAT OR ROUND ROCKS ARE NOT ACCEPTABLE. THE STONE SHALL BE HARD AND OF SUCH QUALITY THAT IT WILL NOT DISINTEGRATE ON EXPOSURE TO WATER OR WEATHERING, BE CHEMICALLY STABLE AND IT SHALL BE SUITABLE IN ALL OTHER RESPECTS FOR THE PURPOSE INTENDED. THE BULK SPECIFIC GRAVITY (SATURATED SURFACE-DRY BASIS) OF THE INDIVIDUAL STONES SHALL BE AT LEAST 2.5.

3. THE STONE SHALL BE COMPOSED OF A WELL-GRADED MIXTURE DOWN TO THE ONE-INCH SIZE PARTICLE SUCH THAT 50 PERCENT OF THE MIXTURE BY WEIGHT SHALL BE LARGER THAN THE D50 SIZE SPECIFIED. A WELL-GRADED MIXTURE IS DEFINED AS A MIXTURE COMPOSED PRIMARILY OF THE LARGER STONE SIZE BUT WITH A SUFFICIENT MIXTURE OF OTHER SIZES TO FILL THE PROGRESSIVELY SMALLER VOIDS BETWEEN THE STONES. THE DIAMETER OF THE LARGEST STONE SIZE IN SUCH A MIXTURE SHALL BE 1.5 TIMES THE D50 SIZE.

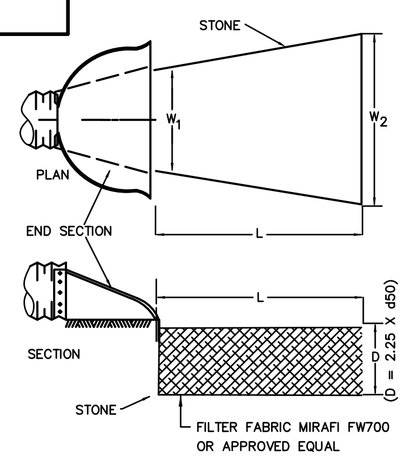

STONE APRON DETAIL

NOT TO SCALE

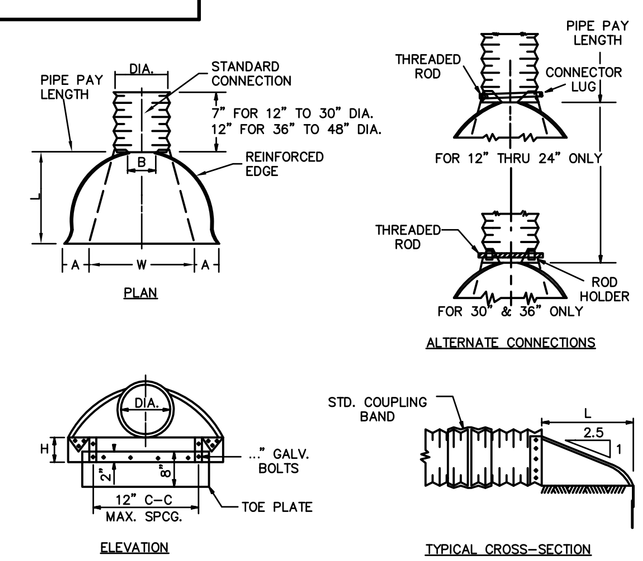

PIPE DIA.	METAL GAGE	DIMENSIONS A (1" TOL.)	B MAX.	H (1" TOL.)	L (1" TOL.)	W (2" TOL.)
12"	16	6"	6"	6"	21"	24"
15"	16	7"	8"	6"	26"	30"
18"	16	8"	13"	6"	31"	36"
24"	16	10"	16"	6"	41"	48"
30"	14	12"	16"	8"	51"	60"
36"	14	14"	19"	9"	60"	72"
42"	12	16"	22"	11"	69"	84"
48"	12	18"	27"	12"	78"	90"

NOTES:

1. END SECTION FOR 12" TO 30" DIA. PIPE IN ONE PIECE, FOR 36" TO 48" DIA. PIPE TO BE MADE FROM TWO SHEETS JOINED BY RIVETING OR BOLTING ON CENTER LINE.

CONNECTOR SECTION, CORNER PLATE
2. AND TOE PLATE TO BE SAME THICKNESS AS END SECTION AND EACH TO BE GALVANIZED.

METAL FLARED END SECTION

NOT TO SCALE

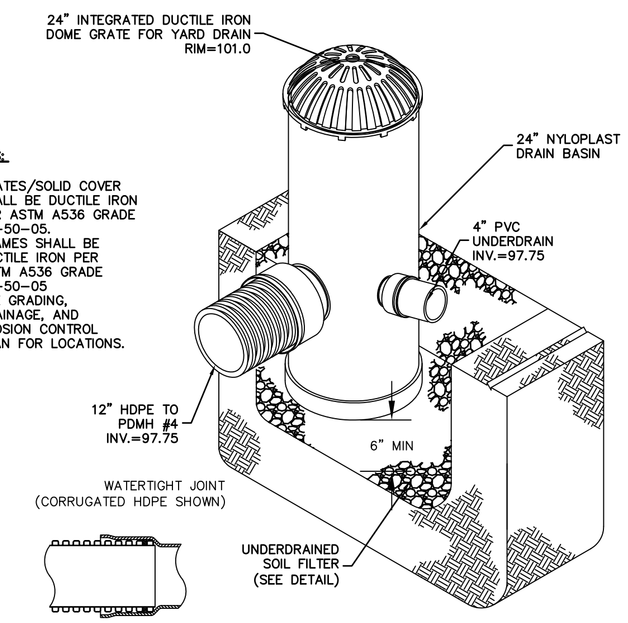

NOTES:

1. GRATES/SOLID COVER SHALL BE DUCTILE IRON PER ASTM A536 GRADE 70-50-05.
2. FRAMES SHALL BE DUCTILE IRON PER ASTM A536 GRADE 70-50-05
3. SEE GRADING, DRAINAGE, AND EROSION CONTROL PLAN FOR LOCATIONS.

YARD DRAIN OVERFLOW

NOT TO SCALE

NOTES:

1. INVERT AND SHELF TO BE PLACED AFTER EACH LEAKAGE TEST.
2. CARE SHALL BE TAKEN TO INSURE THAT THE BRICK INVERT IS A SMOOTH CONTINUATION OF THE SEWER INVERT.
3. INVERT BRICKS SHALL BE LAID ON EDGE.
4. BITUMINOUS WATERPROOF COATING TO BE APPLIED TO ENTIRE EXTERIOR OF MANHOLE.
5. FRAMES AND COVERS MANHOLE FRAMES AND COVERS SHALL BE OF HEAVY DUTY DESIGN AND PROVIDE A 30-INCH CLEAR OPENING. A 3-INCH (MINIMUM HEIGHT) WORD "SEWER" SHALL BE PLAINLY CAST INTO THE CENTER OF EACH COVER.
6. HORIZONTAL JOINTS SHALL BE SEALED FOR WATER TIGHTNESS USING A DOUBLE ROW OF ELASTOMERIC OR MASTIC-LIKE SEALANT.
7. BARREL AND CONE SECTIONS SHALL BE PRECAST REINFORCED CONCRETE DESIGNED FOR H20 LOADING, AND CONFORMING TO ASTM C478-06.

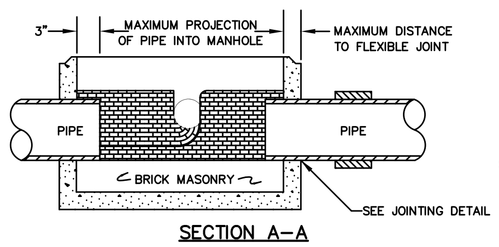

SECTION A-A

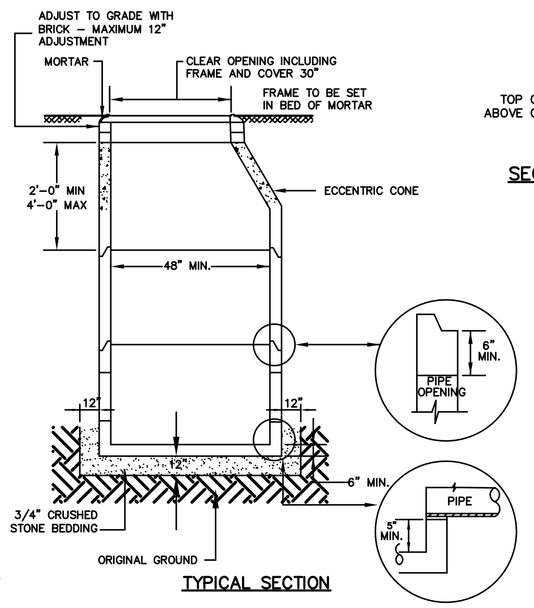

TYPICAL SECTION

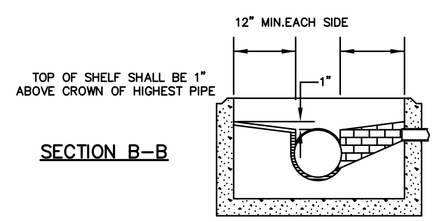

SECTION B-B

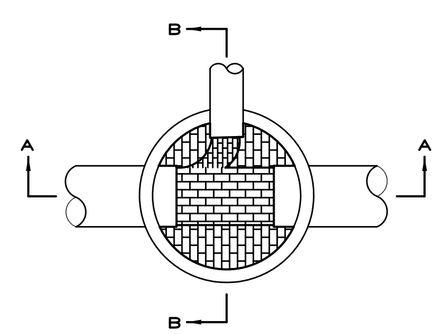

PLAN

SEWER MANHOLE

NOT TO SCALE

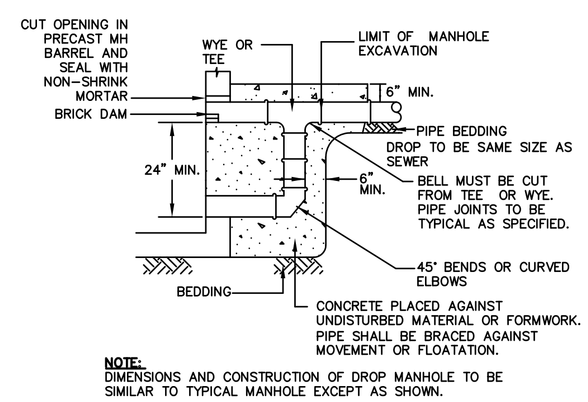

NOTE:
DIMENSIONS AND CONSTRUCTION OF DROP MANHOLE TO BE SIMILAR TO TYPICAL MANHOLE EXCEPT AS SHOWN.

OUTSIDE DROP MANHOLE

NOT TO SCALE

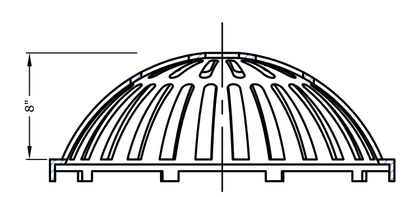

NOTE:

1. GRATE SHALL BE NYLOPLAST 24" DUCTILE IRON DOME GRATE MODEL 2499CGD OR APPROVED EQUAL.

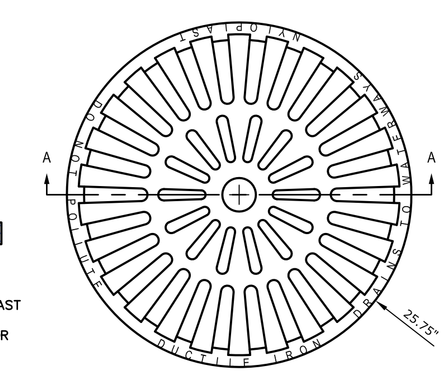

YARD DRAIN OVERFLOW GRATE

NOT TO SCALE

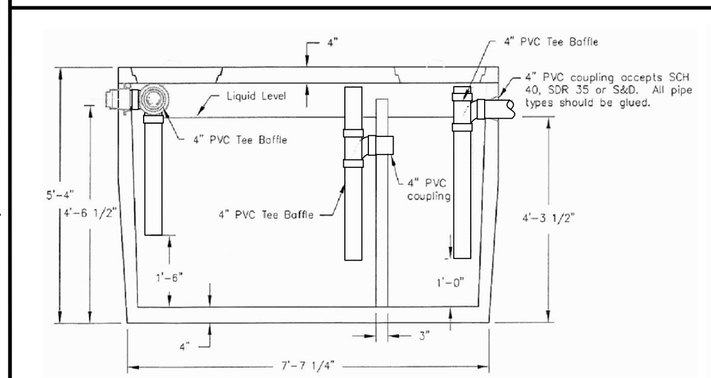

SECTION VIEW

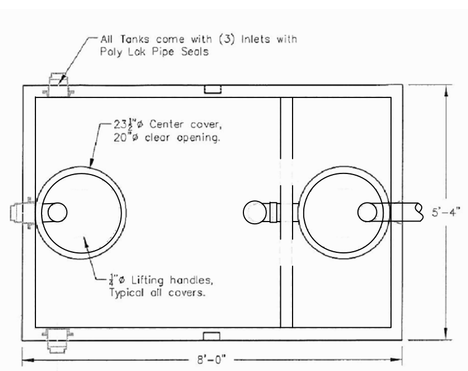

PLAN VIEW

1,000 GALLON GREASE TRAP

NOT TO SCALE

NOTES:

1. GREASE TRAP SHALL BE AMERICAN CONCRETE INDUSTRIES 1000 GALLONS MODEL#8827 OR APPROVED EQUAL.

2. CONCRETE SHALL HAVE STRENGTH OF 4000 PSI @ 28 DAYS.

3. CONCRETE SHALL HAVE 4%-6% ENTRAINED AIR.

4. ALL JOINTS SEALED WITH BUTYL RUBBER JOINT SEALANT.

5. TANK SHOULD BE PUMPED AS NEEDED.

6. MANHOLE FRAME AND COVERS SHALL BE OF HEAVY DUTY DESIGN AND PROVIDE A 30" CLEAR OPENING. A 3" (MINIMUM HEIGHT) WORD "SEWER" FOR SEWERS SHALL BE PLAINLY CAST INTO THE CENTER OF EACH COVER (LEBANON FOUNDRY, INC. CATALOG NO. LC266). ADJUST COVER TO GRADE WITH BRICKS OR PRECAST CONCRETE RINGS-MAXIMUM 12" ADJUSTMENT.

7. ALL COMPONENTS TO BE DESIGNED FOR AASHTO HS20-44 LOADING.

Tighe&Bond
Consulting Engineers
www.tighebond.com

STATE OF MAINE
Bradlee Mazzotta
9410
LICENSED
PROFESSIONAL ENGINEER

Jewish Community Alliance of Southern Maine

Proposed Neighborhood Center

Portland, Maine

April 03, 2015

Mark	Date	Description
1.	5/8/15	REVISED FOR PB WORKSHOP

PROJECT NO:	J-0096
FILE:	J0096-DETAILS.dwg
DRAWN BY:	GWH
CHECKED:	BLM
APPROVED BY:	BLM

DETAILS SHEET

SCALE: AS SHOWN

C-7

May 08, 2015-4:09pm Plotted By: gwh
Tighe & Bond, Inc. J:\J0096 Jewish Community Alliance\DWG-CAD\DESIGN\J0096-DETAILS.dwg Layout: C-7

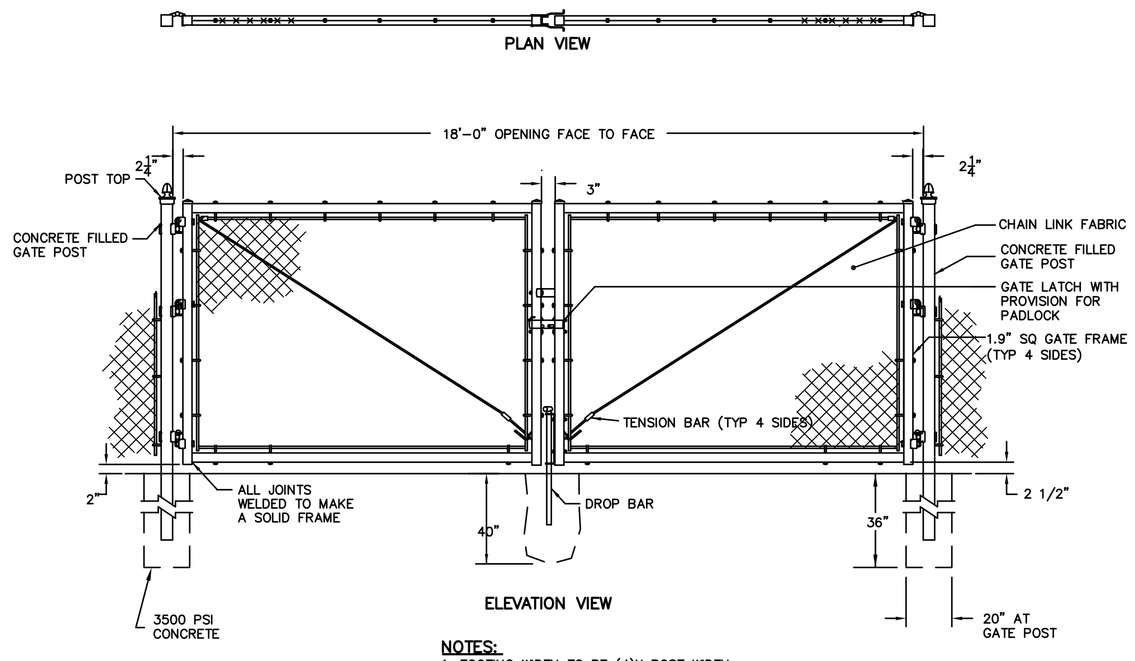

NOTES:
1. FOOTING WIDTH TO BE (4)X POST WIDTH.
2. GATES SHALL BE MANUALLY OPERATED.

DOUBLE SWING GATE
NOT TO SCALE

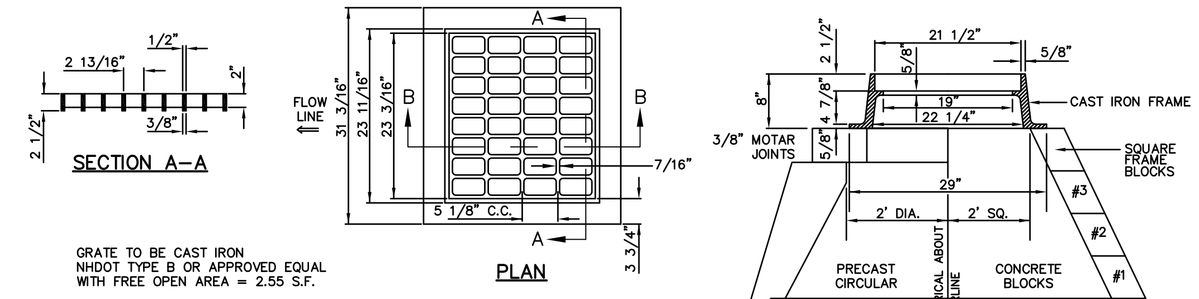

CATCHBASIN FRAME & GRATE
NOT TO SCALE

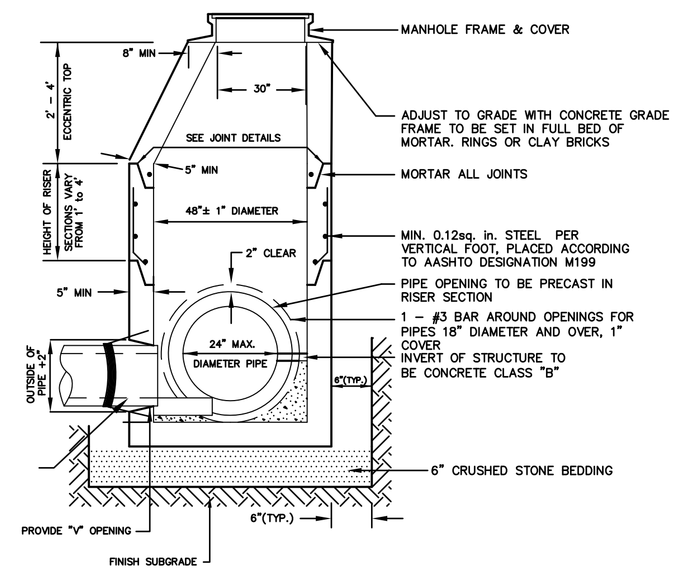

DRAIN MANHOLE (4' DIA)
NOT TO SCALE

NOTES:
1. ALL SECTIONS SHALL BE 4,000 PSI CONCRETE.
2. CIRCUMFERENTIAL REINFORCEMENT SHALL BE 0.12 SQUARE INCHES PER LINEAR FOOT IN ALL SECTIONS AND SHALL BE PLACED IN THE CENTER THIRD OF THE WALL.
3. THE TONGUE AND THE GROOVE OF THE JOINT SHALL CONTAIN ONE LINE OF CIRCUMFERENTIAL REINFORCEMENT EQUAL TO .12 SQUARE INCHES PER LINEAR FOOT.
4. THE STRUCTURES SHALL BE DESIGNED FOR H20 LOADING.
5. CONSTRUCT CRUSHED STONE BEDDING AND BACKFILL UNDER (6" MINIMUM THICKNESS).
6. THE TONGUE AND GROOVE JOINT SHALL BE SEALED WITH ONE STRIP OF BUTYL RUBBER SEALANT.

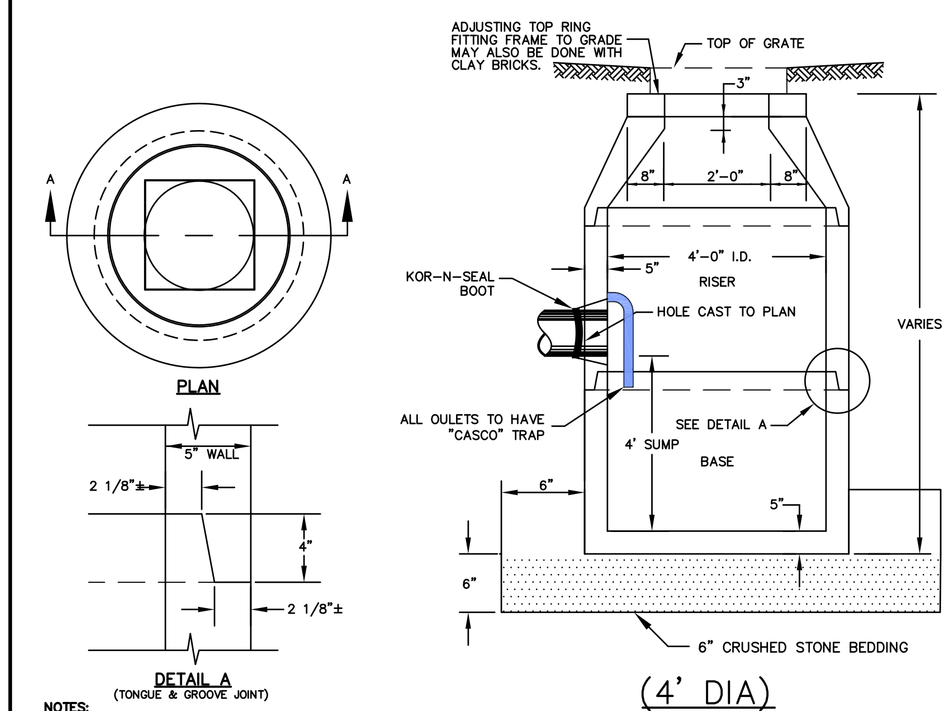

(4' DIA)
CATCHBASIN
NOT TO SCALE

NOTES:
1. ALL SECTIONS SHALL BE CONCRETE CLASS AA(4000 psi).
2. CIRCUMFERENTIAL REINFORCEMENT SHALL BE 0.12 SQ.IN. PER LINEAR FT. IN ALL SECTIONS AND SHALL BE PLACED IN THE CENTER THIRD OF THE WALL.
3. THE TONGUE AND GROOVE OF THE JOINT SHALL CONTAIN ONE LINE OF CIRCUMFERENTIAL REINFORCEMENT EQUAL TO 0.12 SQ. IN. PER LINEAR FT.
4. RISERS OF 1', 2', 3' & 4' CAN BE USED TO REACH DESIRED DEPTH.
5. THE STRUCTURES SHALL BE DESIGNED FOR H20 LOADING.
6. THE TONGUE AND GROOVE JOINT SHALL BE SEALED WITH ONE STRIP OF BUTYL RUBBER SEALANT.

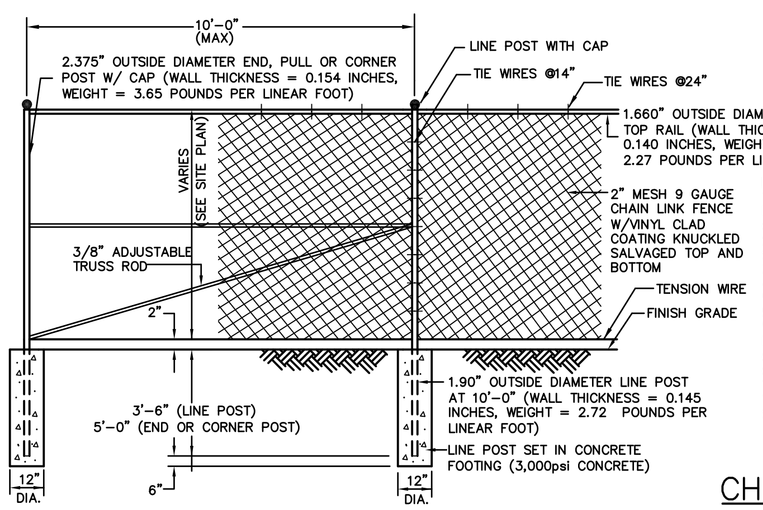

NOTES:
1. CORNER POSTS SHALL BE USED AT SHARP BREAKS IN GRADE AND CHANGES IN HORIZONTAL ALIGNMENT OF 15° OR MORE.
2. POSTS, RAILS & BRACES SHALL BE TYPE I, SCHEDULE 40 BLACK VINYL COATED PIPE.
3. FABRIC TO BE BLACK VINYL COATED.
4. TIE WIRES SHALL BE 9 GAUGE GALVANIZED STEEL WIRE FOR ATTACHMENT OF FABRIC TO LINE POSTS.
5. TIE WIRES SHALL BE 13 GAUGE GALVANIZED STEEL WIRE FOR ATTACHMENT OF FABRIC TO RAILS AND BRACES.
6. HOG RING TIES SHALL BE 12- 1/2 GUAGE GALVANIZED STEEL WIRE FOR ATTACHMENT OF FABRIC TO TENSION WIRE.
7. DUMPSTER ENCLOSURE TO HAVE BLACK VINYL SLATS.

CHAIN LINK FENCE
NOT TO SCALE

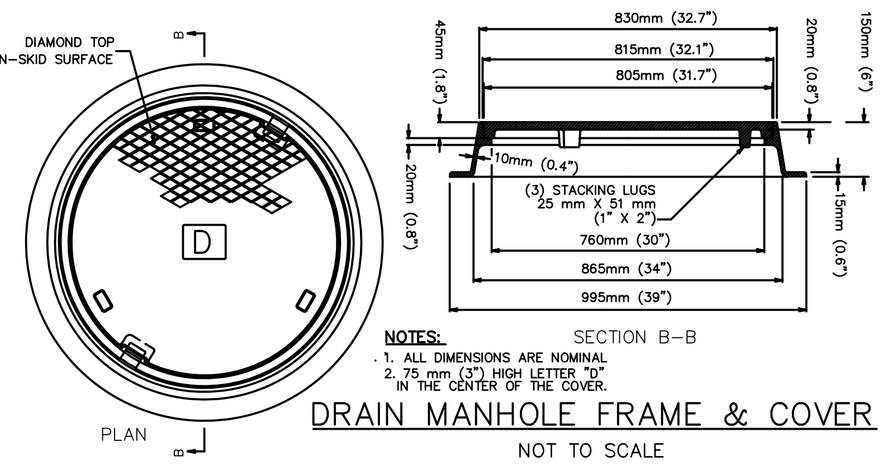

NOTES:
1. ALL DIMENSIONS ARE NOMINAL
2. 75 mm (3") HIGH LETTER "D" IN THE CENTER OF THE COVER.

DRAIN MANHOLE FRAME & COVER
NOT TO SCALE

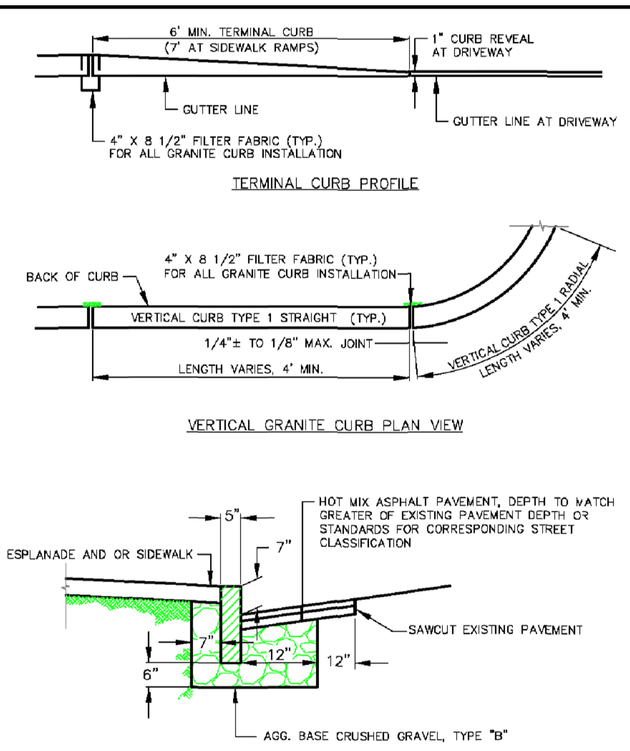

NOTE:
1. DETAIL TAKEN FROM THE CITY OF PORTLAND TECHNICAL MANUAL. ALL WORK IN THE CITY ROW SHALL MEET THE REQUIREMENTS OF THE CITY OF PORTLAND TECHNICAL MANUAL, LATEST EDITION.

CITY OF PORTLAND – VERTICAL GRANITE CURB IN EXISTING STREETS
NOT TO SCALE

NOTES:
DEPTH OF BITUMINOUS PAVEMENT AND AGGREGATE COURSES SHALL BE DETERMINED BY STREET CLASSIFICATION.

ANY ALTERNATE TRENCHING OR PAYMENT METHODS SHALL BE APPROVED IN ADVANCE BY THE CITY OF PORTLAND, DEPARTMENT OF PUBLIC SERVICES.

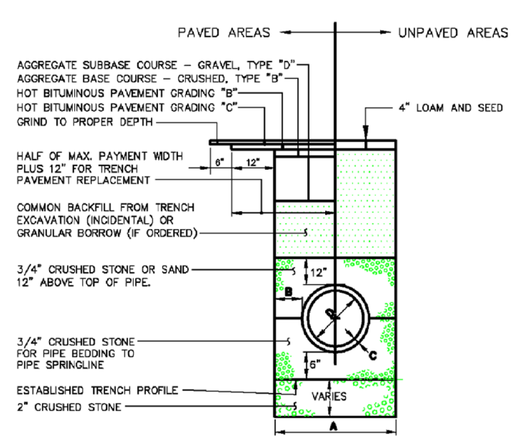

TYPICAL PIPE TRENCH INSTALLATION
NOT TO SCALE

NOTES
1. ALTERNATIVE CONSTRUCTION METHODS OR PAYMENT METHODS SHALL BE APPROVED IN ADVANCE BY THE CITY.
2. IN PAVED AREAS, DEPTHS OF GRAVEL AND HOT MIX ASPHALT PAVEMENT SHALL MATCH THE GREATER OF EXISTING CONDITIONS OR THE REQUIREMENTS FOR THE CORRESPONDING STREET CLASSIFICATION.
3. DIMENSION **B** SHALL BE SUFFICIENT TO ALLOW CRUSHED STONE BEDDING TO BE PLACED AND COMPACTED UNDER THE HAUNCHES OF THE PIPE, BUT IN ALL CASES DIMENSION **B** SHALL BE AT LEAST 9".
4. DIMENSION **A** IS THE MAXIMUM WIDTH ALLOWED FOR CALCULATING PAY QUANTITIES UNDER GRANULAR BORROW, CRUSHED STONE, STRUCTURAL EARTH EXCAVATION, AND STRUCTURAL ROCK EXCAVATION. DIMENSION **A** SHALL BE BASED ON PIPE DIAMETER **D**, AS SET FORTH IN THE FOLLOWING TABLE.

PIPE DIAMETER, **D** (INCHES)	MAX. TRENCH WIDTH, **A** (FEET)
4	4.0
6	4.0
8	4.0
10	4.0
12	5.0
15	5.0
18	5.0
21	5.0
24	6.0
27	6.0
30	6.0
36	6.0
42	7.0
48	7.0

TYPICAL PIPE INSTALLATION – NOTES
NOT TO SCALE

NOTE:
1. DETAIL TAKEN FROM THE CITY OF PORTLAND TECHNICAL MANUAL. ALL WORK IN THE CITY ROW SHALL MEET THE REQUIREMENTS OF THE CITY OF PORTLAND TECHNICAL MANUAL, LATEST EDITION.

CITY OF PORTLAND – TYPICAL PIPE TRENCH DETAIL
NOT TO SCALE

Tighe&Bond
Consulting Engineers
www.tighebond.com

STATE OF MAINE
Bradlee Mazzotta
9410
LICENSED
PROFESSIONAL ENGINEER

Jewish Community Alliance of Southern Maine

Proposed Neighborhood Center

Portland, Maine

April 03, 2015

Mark	Date	Description
1.	5/8/15	REVISED FOR PB WORKSHOP

PROJECT NO:	J-0096
FILE:	J0096-DETAILS.dwg
DRAWN BY:	GWH
CHECKED:	BLM
APPROVED BY:	BLM

DETAILS SHEET

SCALE: AS SHOWN

C-8

May 08, 2015-4:07pm Plotted By: gwh
Tighe & Bond, Inc. J:\J0096 Jewish Community Alliance\DWG-CAD\DESIGN\J0096-DETAILS.dwg Layout: C-8

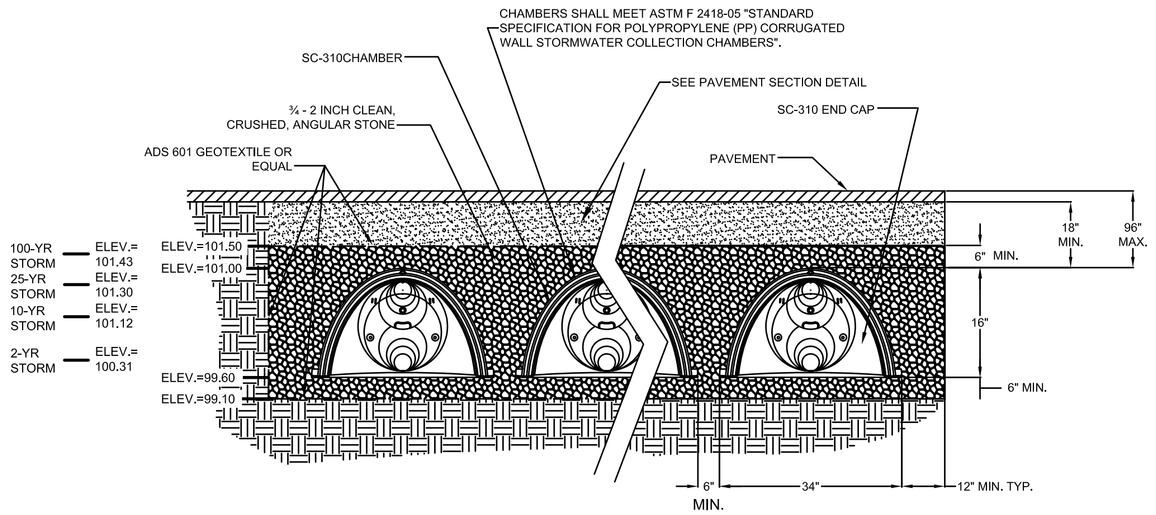

NOTES:

1. SC-310 CHAMBERS SHALL CONFORM TO THE REQUIREMENTS OF ASTM F2418 "STANDARD SPECIFICATION FOR POLYPROPYLENE (PP) CORRUGATED WALL STORMWATER COLLECTION CHAMBERS", OR ASTM F2922 "STANDARD SPECIFICATION FOR POLYETHYLENE (PE) CORRUGATED WALL STORMWATER COLLECTION CHAMBERS".
2. SC-310 CHAMBERS SHALL BE DESIGNED IN ACCORDANCE WITH ASTM F2787 "STANDARD PRACTICE FOR STRUCTURAL DESIGN OF THERMOPLASTIC CORRUGATED WALL STORMWATER COLLECTION CHAMBERS".
3. "ACCEPTABLE FILL MATERIALS" TABLE ABOVE PROVIDES MATERIAL LOCATIONS, DESCRIPTIONS, GRADATIONS, AND COMPACTION REQUIREMENTS FOR FOUNDATION, EMBEDMENT, AND FILL MATERIALS.
4. THE "SITE DESIGN ENGINEER" REFERS TO THE ENGINEER RESPONSIBLE FOR THE DESIGN AND LAYOUT OF THE STORMTECH CHAMBERS FOR THIS PROJECT.
5. THE SITE DESIGN ENGINEER IS RESPONSIBLE FOR ASSESSING THE BEARING RESISTANCE (ALLOWABLE BEARING CAPACITY) OF THE SUBGRADE SOILS AND THE DEPTH OF FOUNDATION STONE WITH CONSIDERATION FOR THE RANGE OF EXPECTED SOIL MOISTURE CONDITIONS.
6. PERIMETER STONE MUST BE EXTENDED HORIZONTALLY TO THE EXCAVATION WALL FOR BOTH VERTICAL AND SLOPED EXCAVATION WALLS.

SC-310 CHAMBER SYTEM CROSS-SECTION
NOT TO SCALE

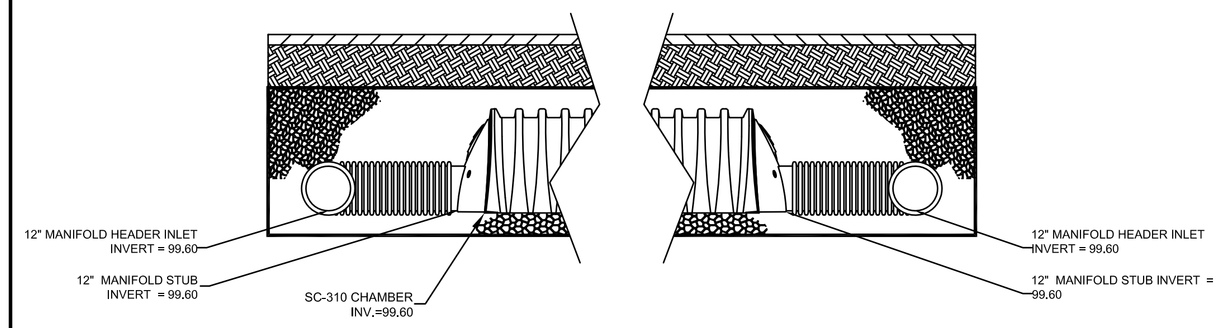

SC-310 CHAMBER HEADER DETAIL
NOT TO SCALE

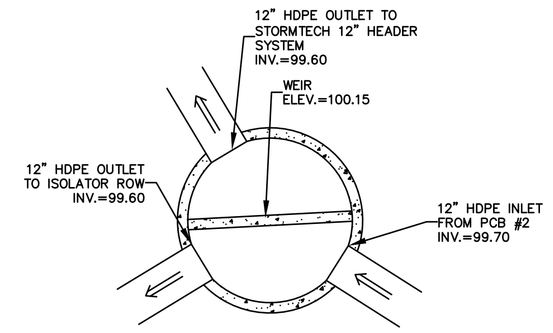

INLET STRUCTURE DETAIL – PDMH#1
NOT TO SCALE

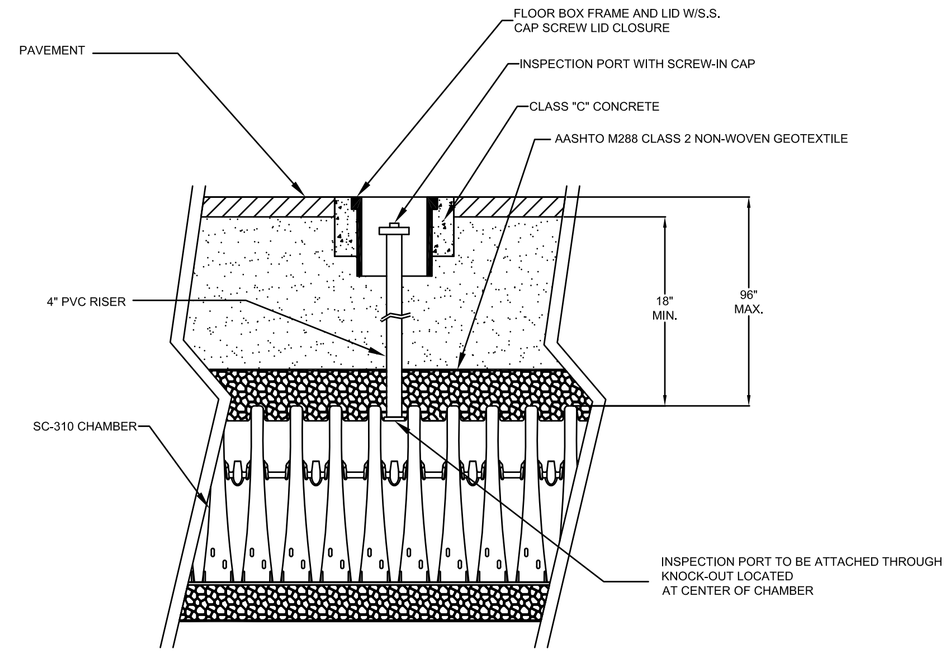

INSPECTION PORT DETAIL
NOT TO SCALE

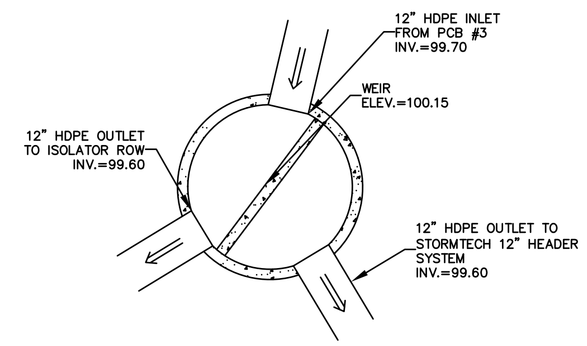

INLET STRUCTURE DETAIL – PDMH#5
NOT TO SCALE

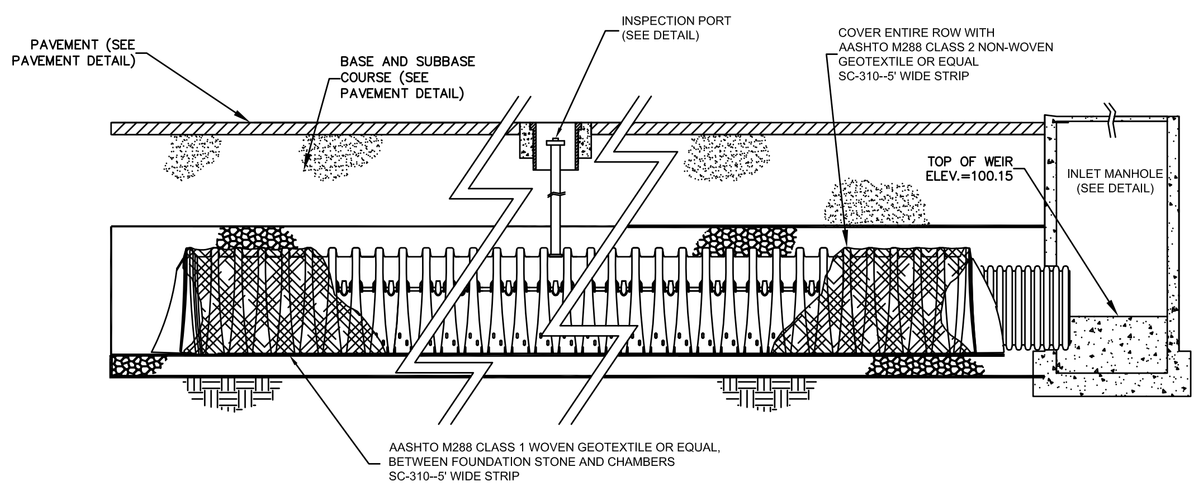

SC-310 ISOLATOR ROW DETAIL
NOT TO SCALE

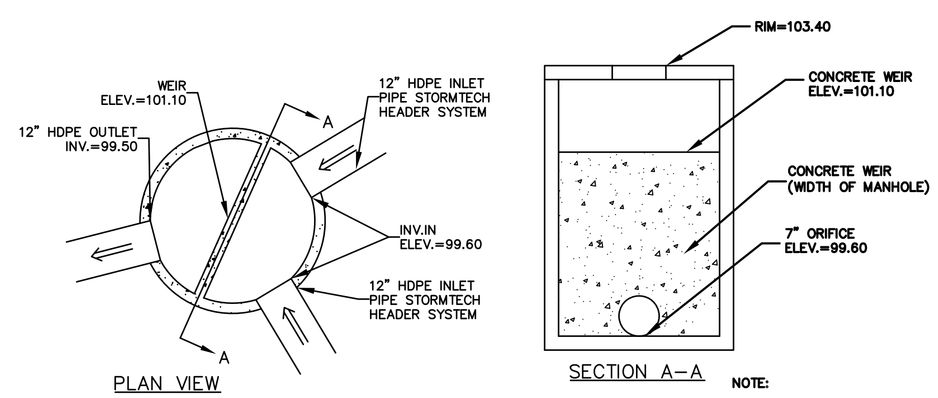

NOTE:

1. CONTRACTOR SHALL PROVIDE A SUBMITTAL FOR THIS STRUCTURE

OUTLET STRUCTURE DETAIL – PDMH#2
NOT TO SCALE

Tighe&Bond
Consulting Engineers
www.tighebond.com

STATE OF MAINE
Bradlee Mazzotta
9410
LICENSED
PROFESSIONAL ENGINEER

Jewish Community Alliance of Southern Maine

Proposed Neighborhood Center

Portland, Maine

May 8, 2015

Mark	Date	Description

PROJECT NO:	J-0096
FILE:	J0096-DETAILS.dwg
DRAWN BY:	GWH
CHECKED:	BLM
APPROVED BY:	BLM

DETAILS SHEET

SCALE: AS SHOWN

C-9

May 08, 2015 4:08pm Plotted By: gwh
Tighe & Bond, Inc. J:\J0096 Jewish Community Alliance\DWG-CAD\DESIGN\J0096-DETAILS.dwg Layout: C-9