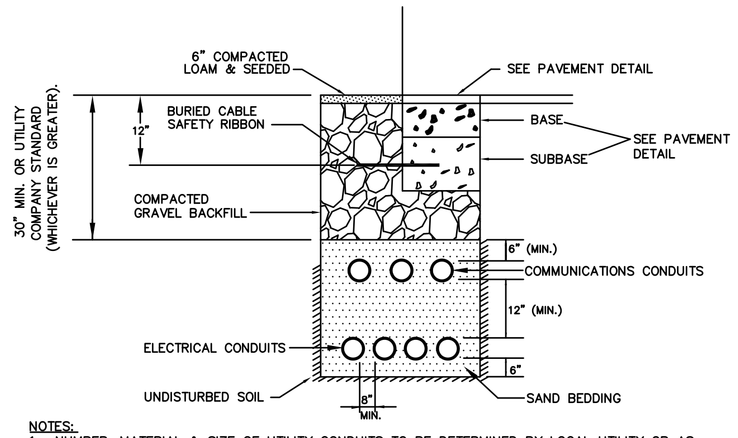

NOTES:

1. NUMBER, MATERIAL & SIZE OF UTILITY CONDUITS TO BE DETERMINED BY LOCAL UTILITY OR AS SHOWN ON ELECTRICAL DRAWINGS. CONTRACTOR TO PROVIDE ONE SPARE CONDUIT FOR EACH UTILITY TO BUILDING.
2. DIMENSIONS SHOWN REPRESENT OWNERS MINIMUM REQUIREMENTS. ACTUAL DIMENSIONS MAY BE GREATER BASED ON UTILITY COMPANY STANDARDS, BUT SHALL NOT BE LESS THAN THOSE SHOWN.
3. NO CONDUIT RUN SHALL EXCEED 360 DEGREES IN TOTAL BENDS.
4. A SUITABLE PULLING STRING, CAPABLE OF 200 POUNDS OF PULL, MUST BE INSTALLED IN THE CONDUIT BEFORE UTILITY COMPANY IS NOTIFIED TO INSTALL CABLE. THE STRING SHOULD BE BLOWN INTO THE CONDUIT AFTER THE RUN IS ASSEMBLED TO AVOID BONDING THE STRING TO THE CONDUIT.
5. UTILITY COMPANY MUST BE GIVEN THE OPPORTUNITY TO INSPECT THE CONDUIT PRIOR TO BACKFILL. THE CONTRACTOR IS RESPONSIBLE FOR ALL REPAIRS SHOULD THE UTILITY COMPANY BE UNABLE TO INSTALL ITS CABLE IN A SUITABLE MANNER.
6. ALL CONDUIT INSTALLATIONS MUST CONFORM TO THE CURRENT EDITION OF THE NATIONAL ELECTRIC SAFETY CODE, STATE AND LOCAL CODES AND ORDINANCES, AND WHERE APPLICABLE, THE NATIONAL ELECTRIC CODE.
7. ALL 90° SWEEPS WILL BE MADE USING RIGID GALVANIZED STEEL. SWEEPS WITH A 36 TO 48 INCH RADIUS.

ELECTRICAL AND COMMUNICATION CONDUIT
NOT TO SCALE

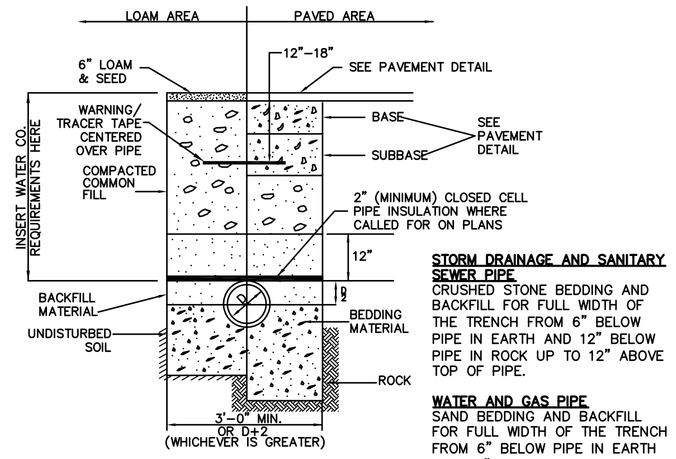

STORM DRAINAGE AND SANITARY SEWER PIPE
CRUSHED STONE BEDDING AND BACKFILL FOR FULL WIDTH OF THE TRENCH FROM 6" BELOW PIPE IN EARTH AND 12" BELOW PIPE IN ROCK UP TO 12" ABOVE TOP OF PIPE.

WATER AND GAS PIPE
SAND BEDDING AND BACKFILL FOR FULL WIDTH OF THE TRENCH FROM 6" BELOW PIPE IN EARTH AND 12" BELOW PIPE IN ROCK UP TO 12" ABOVE TOP OF PIPE.

UTILITY TRENCH
NOT TO SCALE

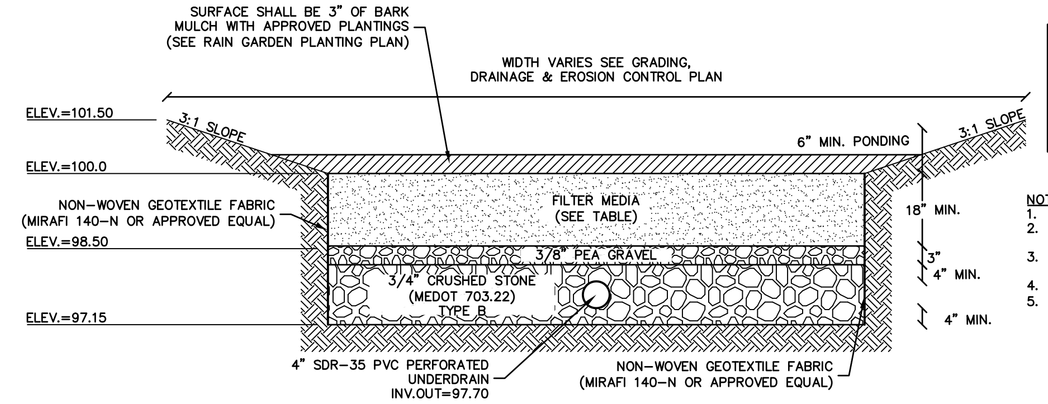

FILTER MEDIA COMPOSITION:

COMPONENT MATERIAL	PERCENT OF MIXTURE BY VOLUME	GRADATION OF MATERIAL SIEVE NO.	PERCENT PASSING
ASTM C-33 CONCRETE SAND	50-55	SEE NOTE #5	
LOAMY SAND TOPSOIL	20-30	200	15-25
MODERATELY FINE SHREDDED BARK OR WOOD FIBER MULCH	20-30	200	5 MAX.

NOTES:

1. BARK MULCH SHALL BE AGED A MINIMUM OF 12 MONTHS AND SHALL NOT FLOAT.
2. RAIN GARDENS SHALL NOT BE PLACED INTO SERVICE UNTIL THE PRACTICE HAS BEEN PLANTED AND ITS CONTRIBUTING AREAS HAVE BEEN FULLY STABILIZED.
3. DO NOT TRAFFIC EXPOSED SOIL SURFACES WITH CONSTRUCTION EQUIPMENT. CONTRACTOR SHALL KEEP ALL EXCAVATION EQUIPMENT OUTSIDE OF THE LIMIT OF THE RAIN GARDEN.
4. SEE GRADING, DRAINAGE & EROSION CONTROL PLAN FOR LOCATIONS, LAYOUTS, AND ELEVATIONS.
5. THE SAND PORTION OF THE FILTER MEDIA SHALL MEET THE FOLLOWING GRADATION (ASTM C-33):

SIEVE SIZE	PERCENT PASSING
1/4"	100
#4	95-100
#8	80-100
#16	50-85
#30	25-60
#50	5-30
#100	0-10

6. THE ESTIMATED SEASONAL HIGH WATER TABLE (ESHWT) IS NOT ANTICIPATED TO BE WITHIN 1 FOOT OF THE BOTTOM OF THE RAIN GARDENS. CONTRACTOR TO CONTACT ENGINEER TO INSPECT SUBGRADE AND VERIFY ESHWT.
7. CONTRACTOR SHALL CONDUCT INFILTRATION TESTS AND REPORT RESULTS TO ENGINEER PRIOR TO CONSTRUCTION.

CROSS SECTION
UNDERDRAINED SOIL FILTER BED DETAIL
NOT TO SCALE

NOTES:

1. STONE SIZE AND MAT DIMENSIONS DETAILED ON PLANS.
2. STONE SHALL CONSIST OF SUB-ANGULAR FIELD STONE OR ROUGH UNHEWN QUARRY STONE OF APPROXIMATELY RECTANGULAR SHAPE. FLAT OR ROUND ROCKS ARE NOT ACCEPTABLE. THE STONE SHALL BE HARD AND OF SUCH QUALITY THAT IT WILL NOT DISINTEGRATE ON EXPOSURE TO WATER OR WEATHERING, BE CHEMICALLY STABLE AND IT SHALL BE SUITABLE IN ALL OTHER RESPECTS FOR THE PURPOSE INTENDED. THE BULK SPECIFIC GRAVITY (SATURATED SURFACE-DRY BASIS) OF THE INDIVIDUAL STONES SHALL BE AT LEAST 2.5.
3. THE STONE SHALL BE COMPOSED OF A WELL-GRADED MIXTURE DOWN TO THE ONE-INCH SIZE PARTICLE SUCH THAT 50 PERCENT OF THE MIXTURE BY WEIGHT SHALL BE LARGER THAN THE D50 SIZE SPECIFIED. A WELL-GRADED MIXTURE IS DEFINED AS A MIXTURE COMPOSED PRIMARILY OF THE LARGER STONE SIZE BUT WITH A SUFFICIENT MIXTURE OF OTHER SIZES TO FILL THE PROGRESSIVELY SMALLER VOIDS BETWEEN THE STONES. THE DIAMETER OF THE LARGEST STONE SIZE IN SUCH A MIXTURE SHALL BE 1.5 TIMES THE D50 SIZE.

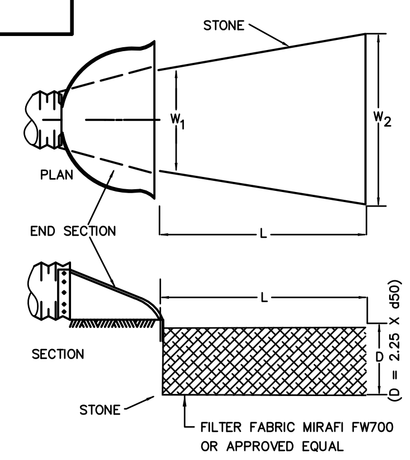

STONE APRON DETAIL
NOT TO SCALE

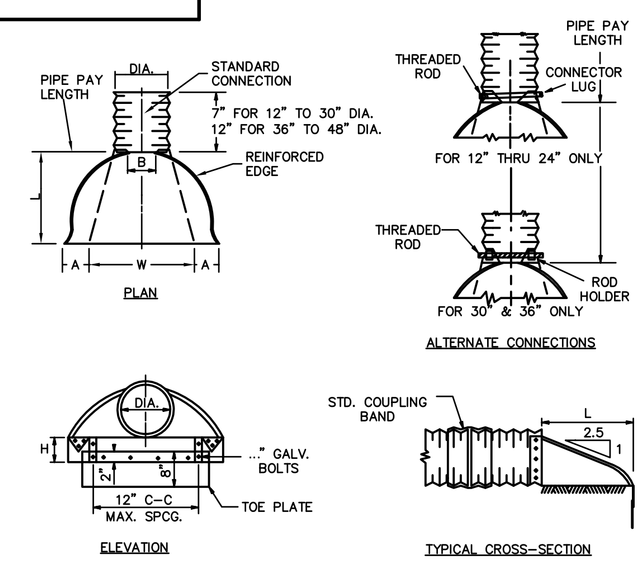

PIPE DIA.	METAL GAGE	DIMENSIONS A (1" TOL.)	B MAX.	H (1" TOL.)	L (1" TOL.)	W (2" TOL.)
12"	16	6"	6"	6"	21"	24"
15"	16	7"	8"	6"	26"	30"
18"	16	8"	13"	6"	31"	36"
24"	16	10"	16"	6"	41"	48"
30"	14	12"	16"	8"	51"	60"
36"	14	14"	19"	9"	60"	72"
42"	12	16"	22"	11"	69"	84"
48"	12	18"	27"	12"	78"	90"

NOTES:

1. END SECTION FOR 12" TO 30" DIA. PIPE IN ONE PIECE, FOR 36" TO 48" DIA. PIPE TO BE MADE FROM TWO SHEETS JOINED BY RIVETING OR BOLTING ON CENTER LINE.

   CONNECTOR SECTION, CORNER PLATE
2. AND TOE PLATE TO BE SAME THICKNESS AS END SECTION AND EACH TO BE GALVANIZED.

METAL FLARED END SECTION
NOT TO SCALE

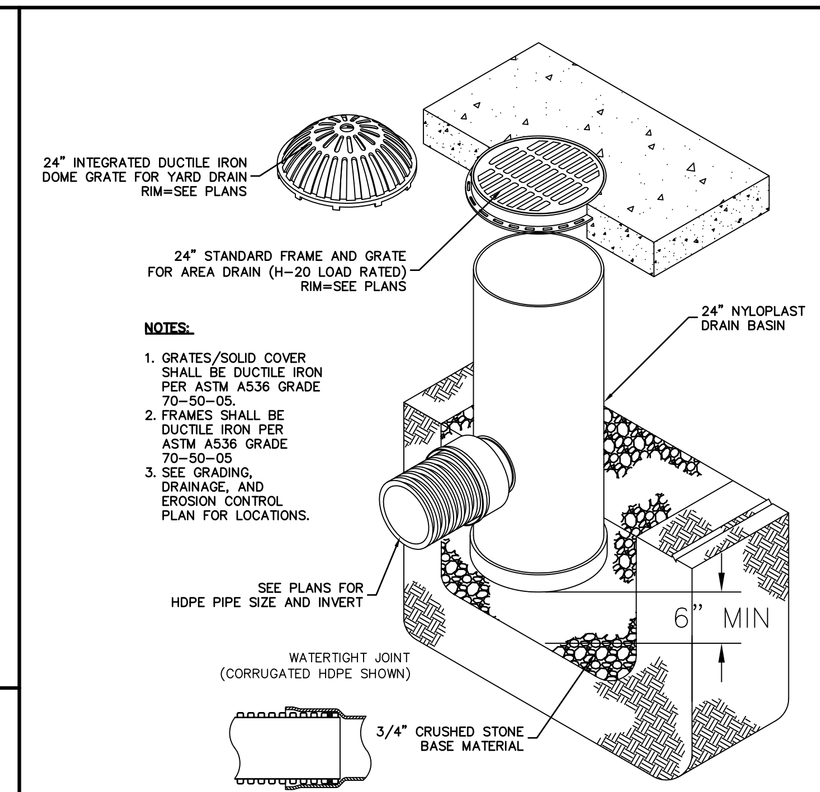

NOTES:

1. GRATES/SOLID COVER SHALL BE DUCTILE IRON PER ASTM A536 GRADE 70-50-05.
2. FRAMES SHALL BE DUCTILE IRON PER ASTM A536 GRADE 70-50-05
3. SEE GRADING, DRAINAGE, AND EROSION CONTROL PLAN FOR LOCATIONS.

YARD DRAIN
NOT TO SCALE

NOTES:

1. INVERT AND SHELF TO BE PLACED AFTER EACH LEAKAGE TEST.
2. CARE SHALL BE TAKEN TO INSURE THAT THE BRICK INVERT IS A SMOOTH CONTINUATION OF THE SEWER INVERT.
3. INVERT BRICKS SHALL BE LAID ON EDGE.
4. BITUMINOUS WATERPROOF COATING TO BE APPLIED TO ENTIRE EXTERIOR OF MANHOLE.
5. FRAMES AND COVERS MANHOLE FRAMES AND COVERS SHALL BE OF HEAVY DUTY DESIGN AND PROVIDE A 30-INCH CLEAR OPENING. A 3-INCH (MINIMUM HEIGHT) WORD "SEWER" SHALL BE PLAINLY CAST INTO THE CENTER OF EACH COVER.
6. HORIZONTAL JOINTS SHALL BE SEALED FOR WATER TIGHTNESS USING A DOUBLE ROW OF ELASTOMERIC OR MASTIC-LIKE SEALANT.
7. BARREL AND CONE SECTIONS SHALL BE PRECAST REINFORCED CONCRETE DESIGNED FOR H20 LOADING, AND CONFORMING TO ASTM C478-06.

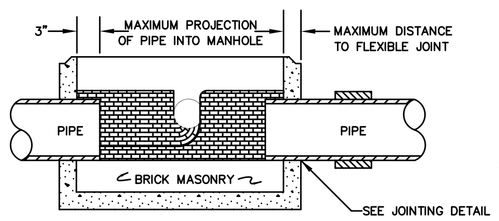

SECTION A-A

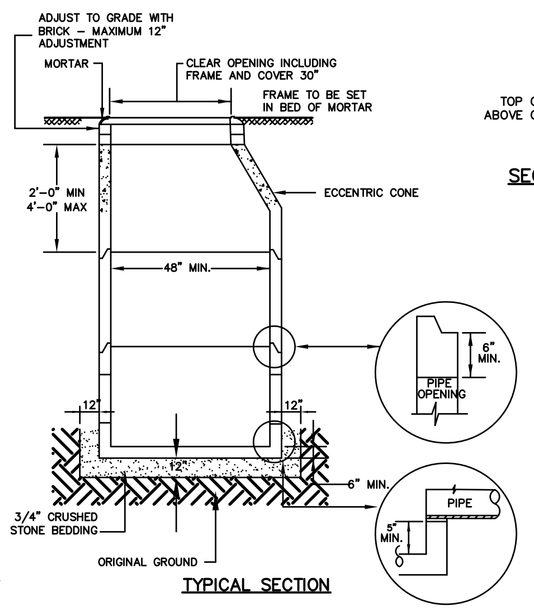

TYPICAL SECTION

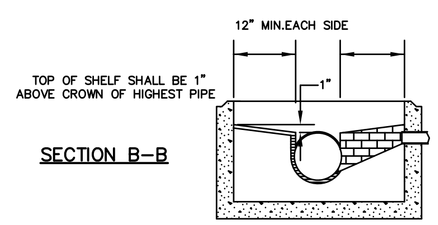

SECTION B-B

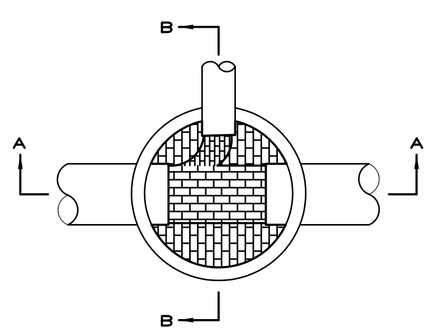

PLAN

SEWER MANHOLE
NOT TO SCALE

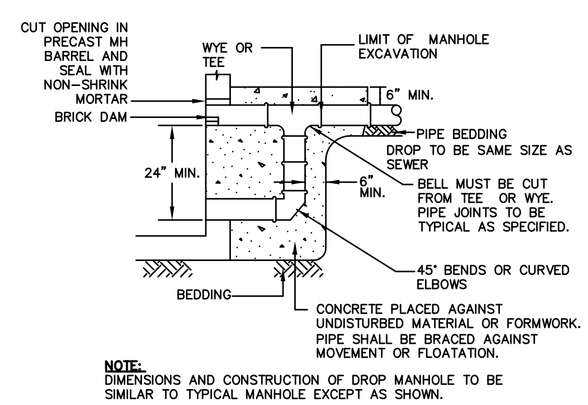

NOTE:
DIMENSIONS AND CONSTRUCTION OF DROP MANHOLE TO BE SIMILAR TO TYPICAL MANHOLE EXCEPT AS SHOWN.

OUTSIDE DROP MANHOLE
NOT TO SCALE

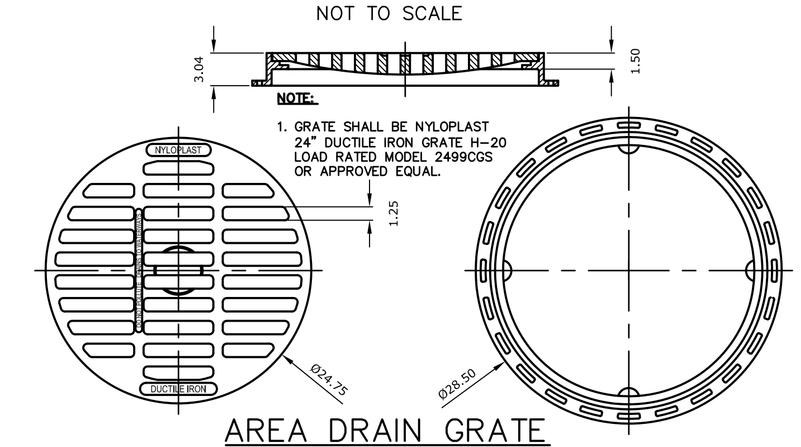

AREA DRAIN GRATE
NOT TO SCALE

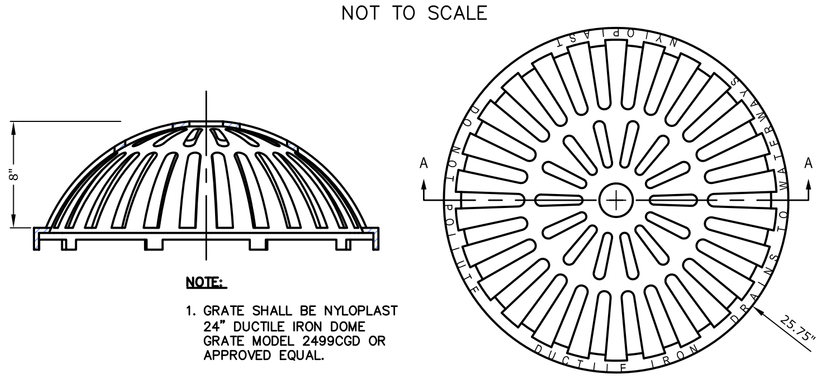

NOTE:

1. GRATE SHALL BE NYLOPLAST 24" DUCTILE IRON DOME GRATE MODEL 2499CGD OR APPROVED EQUAL.

YARD DRAIN GRATE
NOT TO SCALE

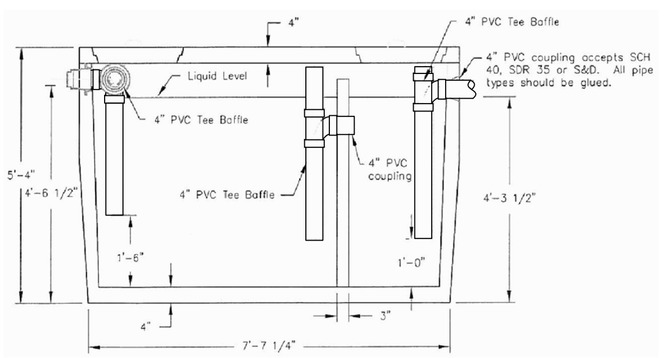

SECTION VIEW

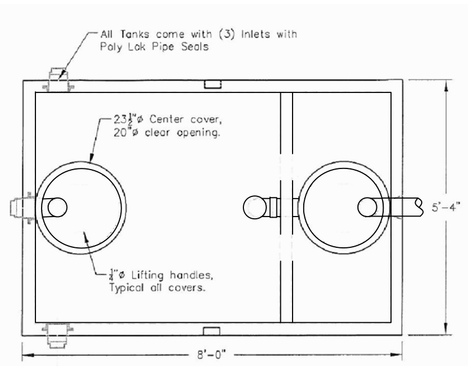

PLAN VIEW

1,000 GALLON GREASE TRAP
NOT TO SCALE

NOTES:

1. GREASE TRAP SHALL BE AMERICAN CONCRETE INDUSTRIES 1000 GALLONS MODEL#8827 OR APPROVED EQUAL.
2. CONCRETE SHALL HAVE STRENGTH OF 4000 PSI @ 28 DAYS.
3. CONCRETE SHALL HAVE 4%-6% ENTRAINED AIR.
4. ALL JOINTS SEALED WITH BUTYL RUBBER JOINT SEALANT.
5. TANK SHOULD BE PUMPED AS NEEDED.
6. MANHOLE FRAME AND COVERS SHALL BE OF HEAVY DUTY DESIGN AND PROVIDE A 30" CLEAR OPENING. A 3" (MINIMUM HEIGHT) WORD "SEWER" FOR SEWERS SHALL BE PLAINLY CAST INTO THE CENTER OF EACH COVER (LEBANON FOUNDRY, INC. CATALOG NO. LC266). ADJUST COVER TO GRADE WITH BRICKS OR PRECAST CONCRETE RINGS-MAXIMUM 12" ADJUSTMENT.
7. ALL COMPONENTS TO BE DESIGNED FOR AASHTO HS20-44 LOADING.

Tighe&Bond
Consulting Engineers
www.tighebond.com

STATE OF MAINE
Bradlee Mezquita
9410
LICENSED
PROFESSIONAL ENGINEER

Jewish Community Alliance of Southern Maine

Proposed Neighborhood Center

Portland, Maine

April 03, 2015

Mark	Date	Description

PROJECT NO:	J-0096
FILE:	J0096-DETAILS.dwg
DRAWN BY:	GWH
CHECKED:	BLM
APPROVED BY:	BLM

DETAILS SHEET

SCALE: AS SHOWN

C-7

Apr 03, 2015-1:26pm Plotted By: gwh
Tighe & Bond, Inc. J:\J0096 Jewish Community Alliance\DWG-CAD\DESIGN\J0096-DETAILS.dwg Layout: C-7