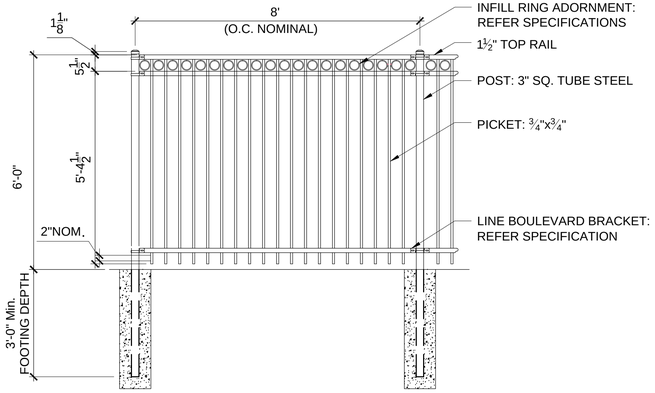

1 STEEL FENCE ELEVATION
N.T.S.

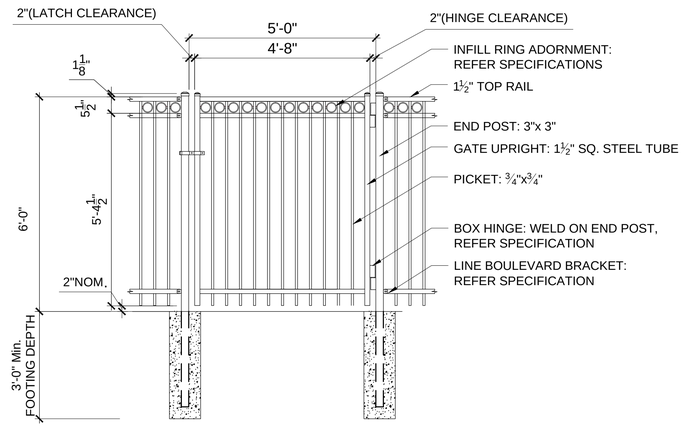

2 STEEL FENCE GATE ELEVATION
N.T.S.

Tighe&Bond
Consulting Engineers
www.tighebond.com

The Cecil Group
Planning and Design
170 MILK STREET, SUITE 5
BOSTON, MA 02109
P 617 426.5050 F 617 426.5051
cecilgroup.com

Jewish Community Alliance of Southern Maine

Proposed Neighborhood Center

Portland, Maine

Mark	Date	Description
	03-25-16	ISSUED FOR BID

PROJECT NO: J-0096
FILE:
DRAWN BY: ARW
CHECKED:
APPROVED BY:

HARDSCAPE DETAILS
(FENCE)

SCALE: AS NOTED

L-4.5