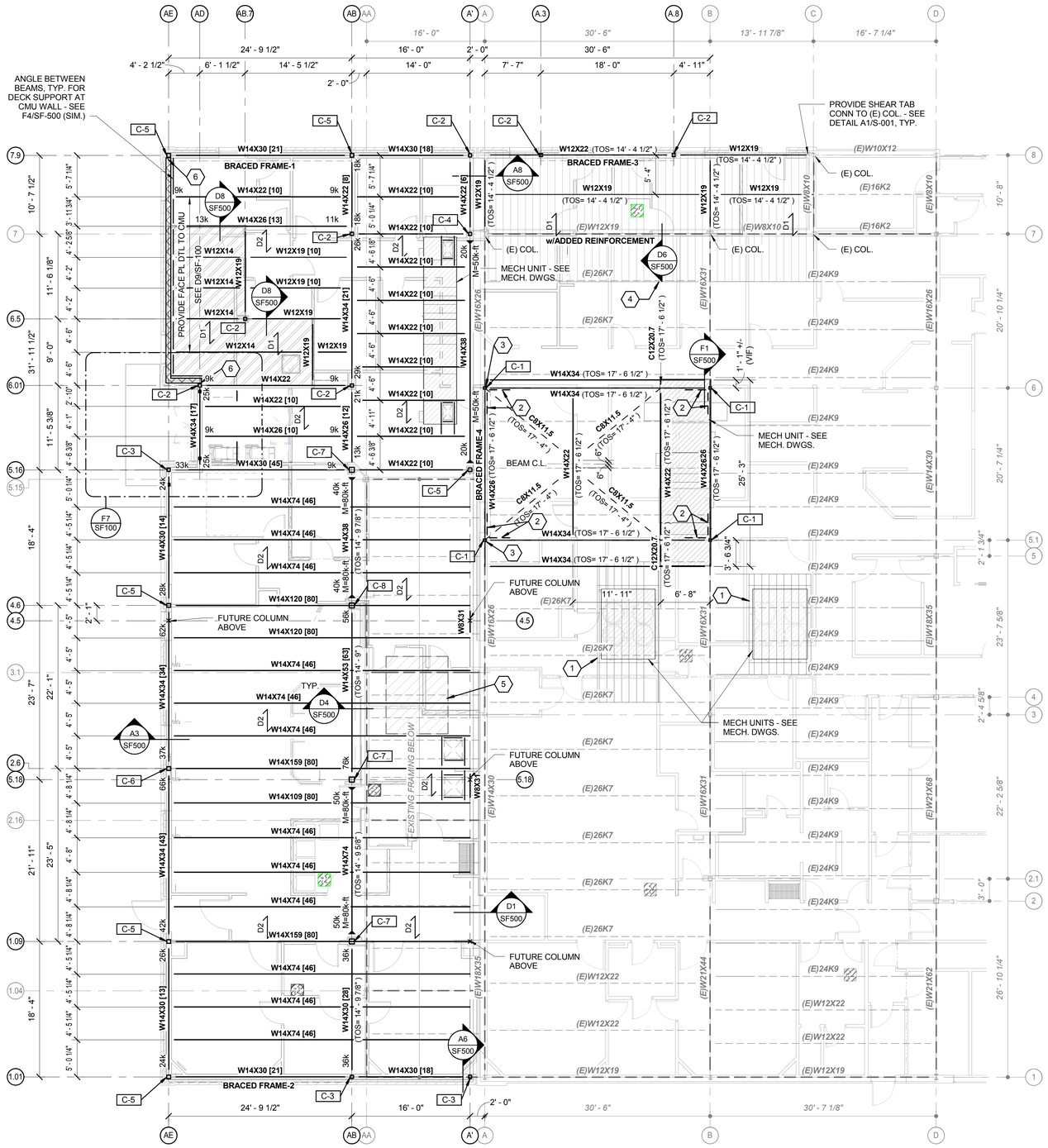

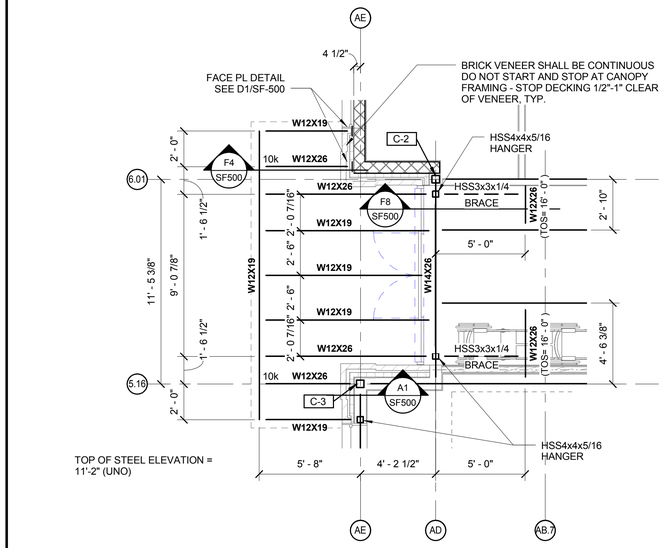

F7	ENTRY CANOPY FRAMING
1/4" = 1'-0"	

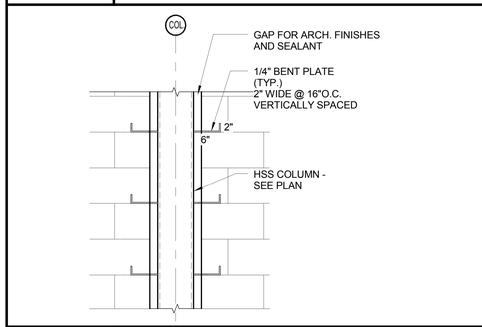

D7	STEEL COLUMN TIE-OFF TO CMU
3/4" = 1'-0"	

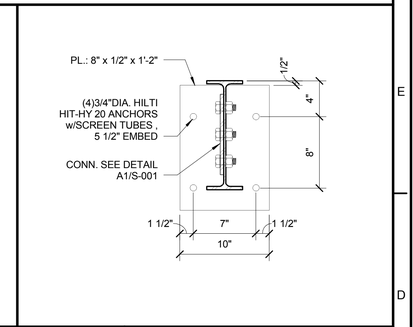

D9	FACE PLATE DETAIL
1 1/2" = 1'-0"	

1. TOP OF STEEL (TOS) ELEVATION = 16'-0" (A.F.F. NOMINALLY CALLED 0'-0" IN THIS SET) UNLESS NOTED
2. SEE A5/S-001 FOR FRAMED OPENINGS IN ROOF.
3. SEE ARCHITECTURAL ROOF PLAN FOR ROOF DRAIN LOCATIONS.
4. STRUCTURAL STEEL CONNECTIONS SHALL BE DESIGNED USING THE 13TH EDITION OF THE AISC STEEL CONSTRUCTION MANUAL, ALLOWABLE STRENGTH DESIGN (ASD) PROVISIONS. CONNECTION DESIGN IS THE RESPONSIBILITY OF THE FABRICATOR FOR OTHER THAN THE STANDARD CONNECTIONS NOTED ON S001. CONNECTION CALCULATIONS SHALL BE SIGNED, SEALED BY A PE REGISTERED IN THE PROJECT STATE AND SUBMITTED FOR REVIEW WITH THE SHOP DRAWINGS. SEE PROJECT SPECIFICATIONS FOR ADDITIONAL REQUIREMENTS. PARTIAL SUBMITTAL PACKAGES WILL BE RETURNED.
5. FIELD CONNECTIONS SHALL BE FIELD BOLTED WITH A325N HIGH STRENGTH BOLTS (U.N.O.) EXCEPT WHERE SLIP CRITICAL CONNECTIONS ARE REQUIRED AND NOTED BY A325 (SC) ON THE DRAWINGS. PROVIDE SLIP CRITICAL (SC) CONECTIONS AT MOMENT CONNECTIONS, BRACED FRAMES, RELIEVING ANGLES AND WHERE OTHERWISE NOTED.
6. PROVIDE 3/4" THICK COLUMN CAP PLATES TYPICAL UNLESS NOTED.
7. BEAM END REACTIONS SHALL BE 8k UNFACTORED, UNLESS NOTED.

× INDICATES FUTURE COLUMN ABOVE - PROVIDE WEB STIFFENER EA SIDE OF BEAM WEB, REFER TO DETAIL C7/S-001

D1 INDICATES DECK SPAN OF 1 1/2", TYPE 'B' STEEL DECKING

D2 INDICATES SPAN OF 4" LIGHT WEIGHT CONCRETE ON 1 1/2" COMPOSITE STEEL DECKING - TOTAL FLOOR DEPTH = 4"

INDICATES MOMENT CONNECTION - SEE DTL C5/S-001

INDICATES HANGING COLUMN

[#] # INDICATES SHEAR STUDS 3/4"x3 1/2" EQUALLY SPACED ALONG LENGTH OF BEAM

1. PROVIDE 24GA. GALVANIZED STEEL DECKING (MATCH EXISTING) SET ON TOP OF (E) DECKING - EXTEND TO NEAREST (E) ROOF JOIST BEYOND EACH END AS SHOWN. PROVIDE 4" CONCRETE SLAB, EXTEND 6" BEYOND UNIT EDGE IN EACH DIRECTION. FASTEN TO (E) DECKING USING #12 TEK SCREWS ON A 36/4 PATTERN w/10"O.C. STITCHES ALONG PANEL EDGES.
2. INDICATES STIFFENER PLATE LOCATION, SEE DETAIL F1/SF-500 (SIM.)
3. PROVIDE 3/4" THICK BASE PLATE TO STUB COLUMN (PROPOSED HSS) EXTEND THE PLATE 1/2" MIN. BEYOND (E) COLUMN FLANGES - WELD TO (E) COLUMN w/1/4" FILLET WELD ALL AROUND.
4. EXTEND STEEL DECKING OVER (E) DECKING TO FIRST (E) ROOF JOIST.
5. REMOVE (E) CONCRETE PAD UNDER (E) UNIT TO BE REMOVED AND RELOCATED.
6. REFER TO STANDARD DETAIL FOR COLUMN TIE-OFF TO MASONRY WALL - SEE D7/SF-100

BRICK VENEER LINTEL SCHEDULE

OPENING	ANGLE SIZE (GALV.)	BEARING (EA. END)
0' - 3'-11"	L4"x4"x1/4" (LLV)	8" MIN.
4' - 7'-11"	L6"x4"x5/16" (LLV)	8" MIN.
8'- 11'-11"	L6"x4"x5/8" (LLV)	8" MIN.

COLUMN SCHEDULE - PH2

MARK	SIZE
C-1	HSS4X4X5/16
C-2	HSS5X5X5/16
C-3	HSS5X5X3/8
C-4	HSS5X5X1/2
C-5	HSS6X6X1/2
C-6	HSS6X6X5/8
C-7	HSS8X8X1/2
C-8	HSS8X8X5/8

A1	STRUCTURAL ~ ROOF FRAMING PLAN
1/8" = 1'-0"	

PDT ARCHITECTS
49 DARTMOUTH STREET
PORTLAND, MAINE 04101
207-775-1059
www.pdtarchs.com

Allied Engineering
Structural Mechanical Electrical Commissioning
160 Veranda Street
Portland, Maine 04103
T: 207.221.2260
F: 207.221.2266
Web: www.allied-eng.com

ALLIED PROJECT No.: 12064
CAD FILE: 12064_S.rvt

COPYRIGHT 2012
PDT Architects
Reuse or reproduction of the contents of this document is not permitted without written permission of PDT Architects.

E.M.G. - PHASE 2 ADDITION & RENOVATION
53 Sewall Street, Portland, ME 04102

STATE OF MAINE WILLIAM P. FAUCHER No. 7138 LICENSED PROFESSIONAL ENGINEER

PDT JOB NO. 12084

DRWN. CHK WFP

SCALE: As indicated

ISSUE: STRUCTURAL STEEL PACKAGE JUNE 27, 2013

TITLE: STRUCTURAL - FRAMING PLANS

SHEET
SF100

6/28/2013 12:12:43 PM N:\Projects\2012\12064 ~ Eyecare Medical Group-Addition and Renovation\00 Drawing Files\12064_S.rvt