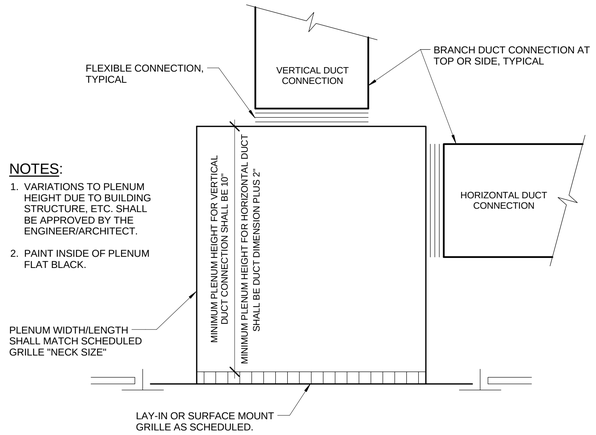

NOTES:

1. VARIATIONS TO PLENUM HEIGHT DUE TO BUILDING STRUCTURE, ETC. SHALL BE APPROVED BY THE ENGINEER/ARCHITECT.
2. PAINT INSIDE OF PLENUM FLAT BLACK.

F1 - DETAIL - RETURN AIR REGISTER BOOT 1

12" = 1'-0"

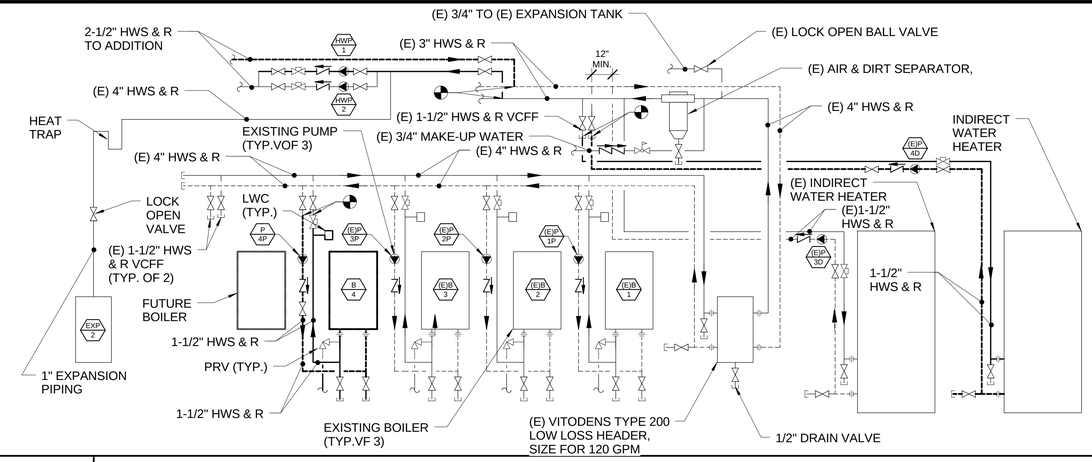

F4 BOILER SCHEMATIC

1" = 1'-0"

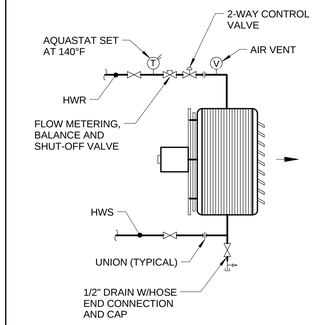

F9 15766 - UNIT HEATER PIPING

12" = 1'-0"

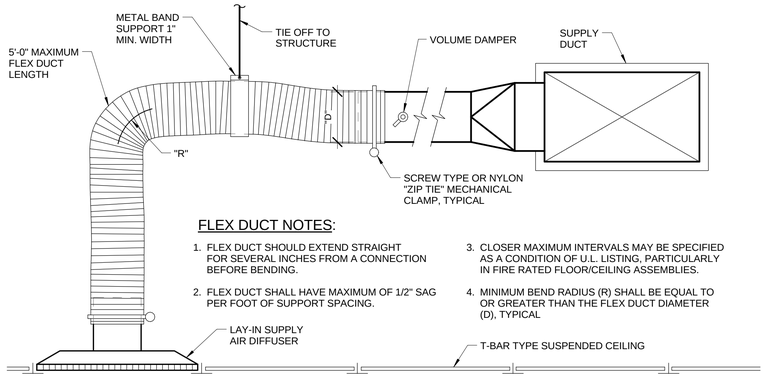

FLEX DUCT NOTES:

1. FLEX DUCT SHOULD EXTEND STRAIGHT FOR SEVERAL INCHES FROM A CONNECTION BEFORE BENDING.
2. FLEX DUCT SHALL HAVE MAXIMUM OF 1/2" SAG PER FOOT OF SUPPORT SPACING.
3. CLOSER MAXIMUM INTERVALS MAY BE SPECIFIED AS A CONDITION OF U.L. LISTING, PARTICULARLY IN FIRE RATED FLOOR/CEILING ASSEMBLIES.
4. MINIMUM BEND RADIUS (R) SHALL BE EQUAL TO OR GREATER THAN THE FLEX DUCT DIAMETER (D), TYPICAL

D1 - DETAIL - SUPPLY AIR BRANCH CONNECTION

12" = 1'-0"

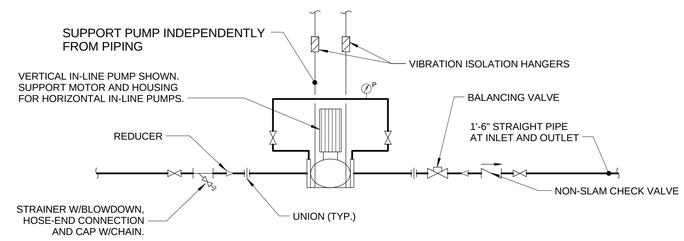

D5 PUMP DETAIL

12" = 1'-0"

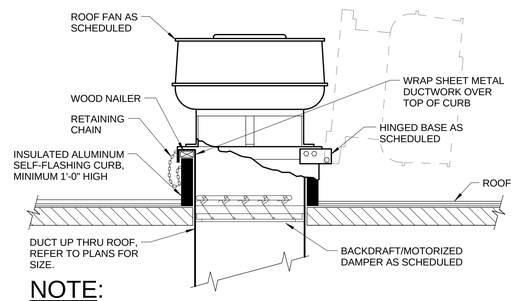

NOTE:

REFER TO ARCHITECTURAL DRAWINGS FOR ROOF CURB FLASHING DETAILS.

D8 DETAIL - ROOF MOUNTED EXHAUSTER

12" = 1'-0"

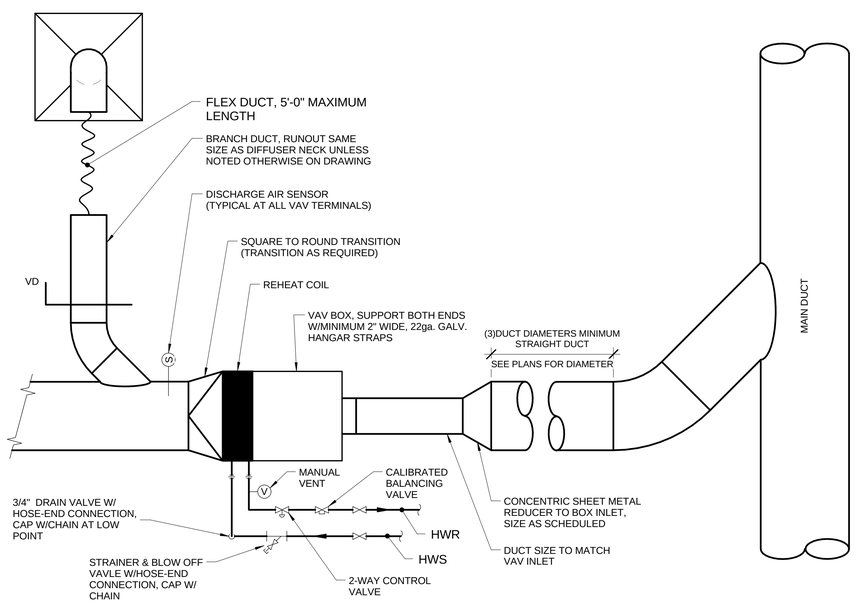

A1 -DETAIL - VAV BOX SCHEMATIC

12" = 1'-0"

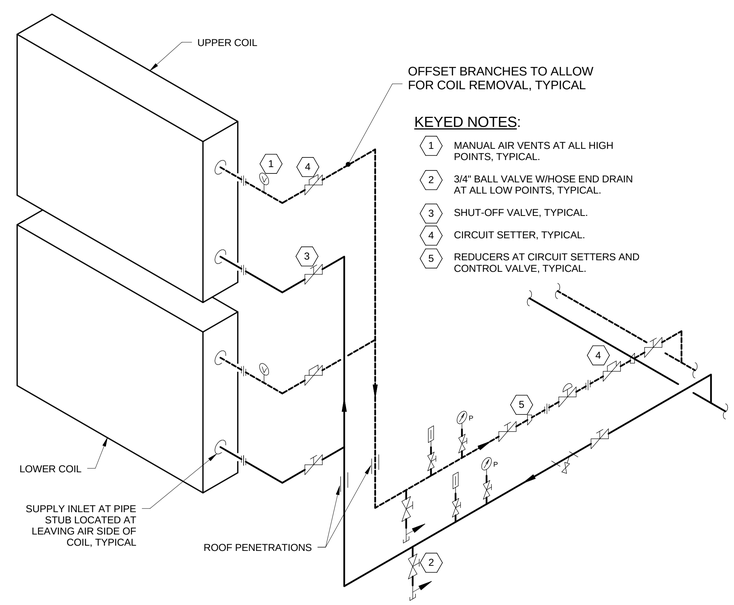

KEYED NOTES:

1. MANUAL AIR VENTS AT ALL HIGH POINTS, TYPICAL.
2. 3/4" BALL VALVE W/HOSE END DRAIN AT ALL LOW POINTS, TYPICAL.
3. SHUT-OFF VALVE, TYPICAL.
4. CIRCUIT SETTER, TYPICAL.
5. REDUCERS AT CIRCUIT SETTERS AND CONTROL VALVE, TYPICAL.

A5 DETAIL - HYDRONIC COIL PIPING SCHEMATIC - 2-WAY VALVE

12" = 1'-0"

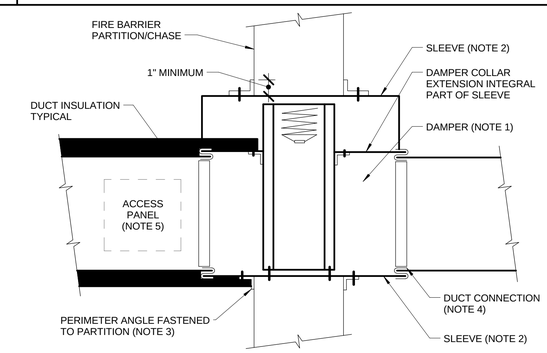

NOTES:

1. A VERTICAL DAMPER IS SHOWN. HORIZONTAL DAMPER INSTALLATION IS SIMILAR, FOLLOW MANUFACTURER'S INSTRUCTIONS INCLUDING FASTENER OPTIONS AND GAUGES FOR SLEEVE AND PERIMETER ANGLES. FIRE DAMPERS MUST BE INSTALLED IN THE PARTITION OR FLOOR AND NOT OUTSIDE THE PENETRATION.
2. GALVANIZED SLEEVE: GAUGE NOT LESS THAN CONNECTING DUCT. FASTEN SLEEVE TO DAMPER FRAME AND TO PERIMETER ANGLES.
3. PERIMETER ANGLES: GALVANIZED STEEL, NOT LESS THAN 1-1/2"x 1-1/2", 14 GAUGE, TO PROVIDE 1" MINIMUM OVERLAP OF OPENING ON ALL 4 SIDES.
4. BREAK-AWAY DUCT CONNECTION: CONTRACTOR'S OPTION OF TYPES SHOWN IN SMACNA LPDS, FIGURE 2-13, SEAL JOINTS.
5. ACCESS PANELS: SIZE AND LOCATION TO PERMIT SERVICING THE FUSIBLE LINK OR LINKS.

A8 15815 - TYPICAL FIRE DAMPER

12" = 1'-0"

PDT ARCHITECTS
49 DARTMOUTH STREET
PORTLAND, MAINE 04101
207-775-1059
www.pdtarchs.com

Allied Engineering
Structural Mechanical Electrical Commissioning
160 Veranda Street
Portland, Maine 04103
T: 207.221.2260
F: 207.221.2266
Web: www.allied-eng.com

ALLIED PROJECT No.: 12064

CAD FILE:

COPYRIGHT 2012
PDT Architects
Reuse or reproduction of the contents of this document is not permitted without written permission of PDT Architects.

E.M.G. - PHASE 2 ADDITION & RENOVATION

53 Sewall Street, Portland, ME 04102

STATE OF MAINE
ANTHONY S. DAVIS
No. 8834
LICENSED
PROFESSIONAL ENGINEER

PDT JOB NO. 12084

DRWN. CHK
Checker

SCALE:
As indicated

ISSUE:
JULY 11, 2013

TITLE
MECHANICAL DETAILS AND NOTES

SHEET
MH500

N:\Projects\2012\12064 – Eyecare Medical Group-Addition and Renovation\00 Drawing Files\12064_M.rvt
7/11/2013 5:53:44 PM