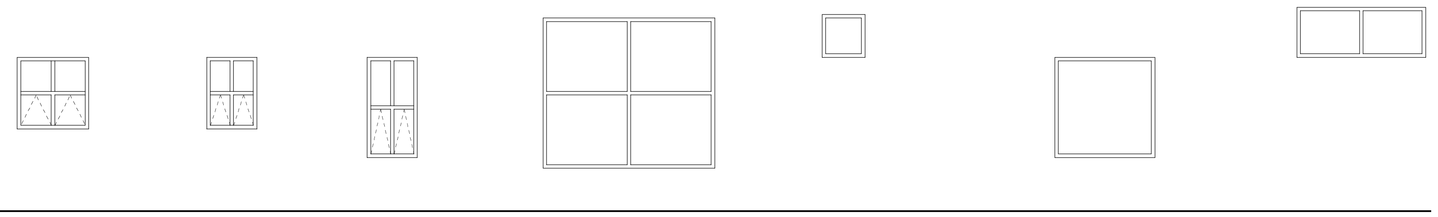

WINDOW SCHEDULE

WINDOW			SIZE				DETAILS			GENERAL	
ID	Location	Type	Width	Height	Rough Opening	Masonry Opening	Sill	Head	Jamb	Accessories	Remarks
161.1	161	FG	8'0"	7'0"							Re-use existing window
164.1	164	FG	3'4"	3'4"							
164.2	164	FG	2'4"	3'4"							
169.1	169	FG	9'4"	2'0"							
172.1	172	FG	9'4"	2'0"							
183A.1	183A	FG	9'4"	2'0"							
183A.2	183A	FG	2'0"	2'0"							
183A.3	183A	FG	2'0"	2'0"							
183A.4	183A	FG	2'0"	2'0"							
183A.5	183A	FG	2'0"	2'0"							
183A.6	183A	FG	2'0"	2'0"							
183A.7	183A	FG	2'0"	2'0"							
183A.7	183A	FG	2'0"	2'0"							
183A.8	183A	FG	2'0"	2'0"							
201.1	201	FG/AW	4'8"	4'8"							
203.1	203	FG/AW	4'8"	4'8"							
203.1	203	FG/AW	4'8"	4'8"							
203.1	203	FG/AW	4'8"	4'8"							
205.1	205	FG/AW	4'8"	4'8"							
205.1	205	FG/AW	4'8"	4'8"							
205.1	205	FG/AW	4'8"	4'8"							
207.1	207	FG/AW	4'8"	4'8"							
207.1	207	FG/AW	4'8"	4'8"							
207.1	207	FG/AW	4'8"	4'8"							
207.2	207	FG/AW	4'8"	4'8"							
208.1	208	FG	2'0"	2'0"							
209.1	209	FG/AW	2'4"	4'8"							
209.2	209	FG/AW	4'8"	4'8"							
210.1	210	FG/AW	4'8"	4'8"							
212.1	212	FG/AW	4'8"	4'8"							
214.1	214	FG/AW	4'8"	4'8"							
266.1	266	FG	4'8"	4'8"							
266.1	266	FG	4'8"	4'8"							
266.1	266	FG	4'8"	4'8"							

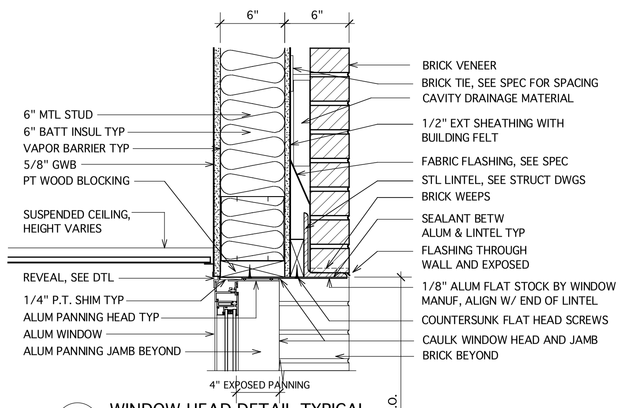

2 A-602 WINDOW HEAD DETAIL TYPICAL
Scale: 1 1/2"= 1'-0"

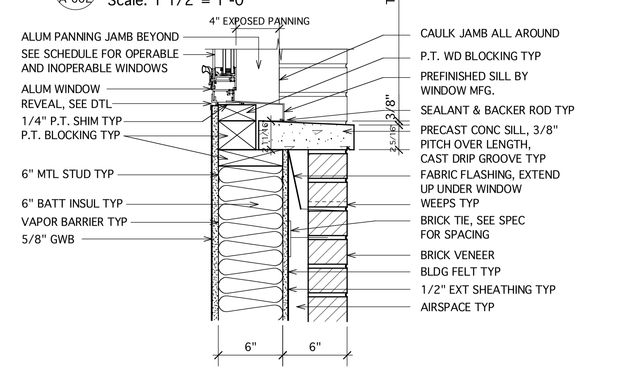

1 A-602 WINDOW SILL DETAIL TYPICAL
Scale: 1 1/2"= 1'-0"

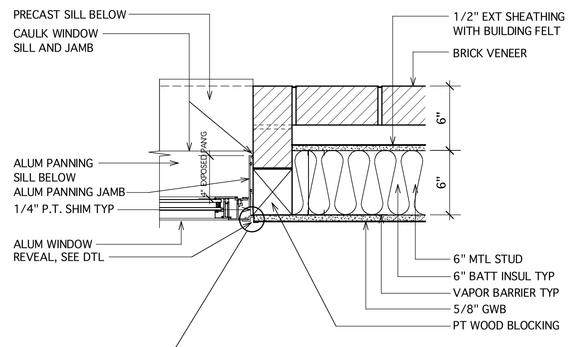

3 A-602 WINDOW JAMB DETAIL TYPICAL
Scale: 1 1/2"= 1'-0"

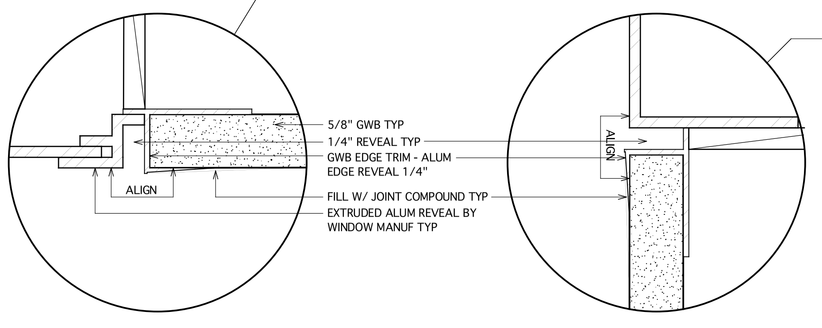

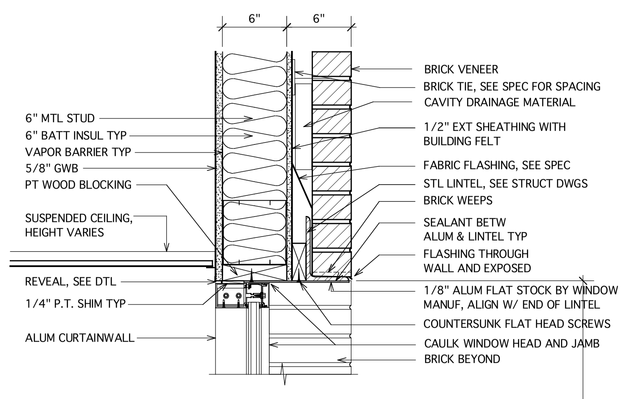

6 A-602 WINDOW HEAD DETAIL @ WAITING
Scale: 1 1/2"= 1'-0"

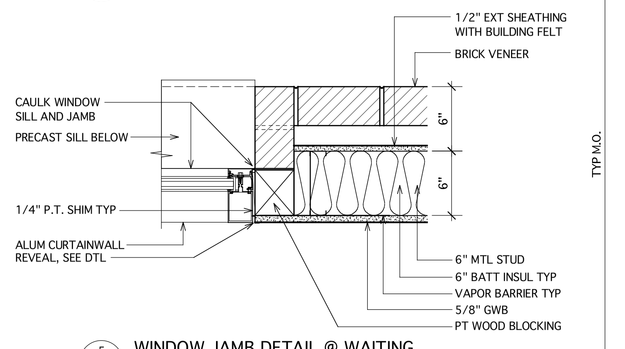

5 A-602 WINDOW JAMB DETAIL @ WAITING
Scale: 1 1/2"= 1'-0"

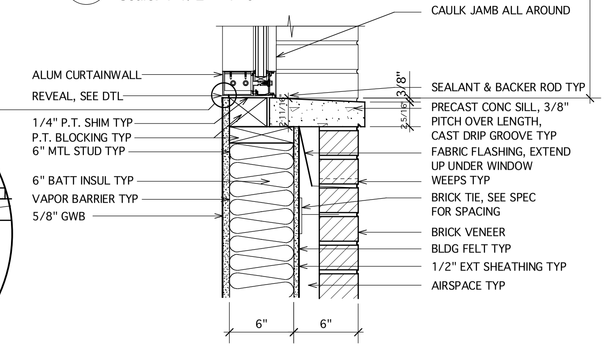

4 A-602 WINDOW SILL DETAIL @ WAITING
Scale: 1 1/2"= 1'-0"

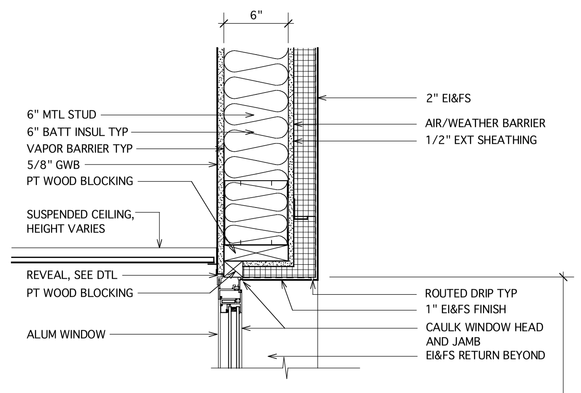

9 A-602 WINDOW HEAD DETAIL @ EI&FS
Scale: 1 1/2"= 1'-0"

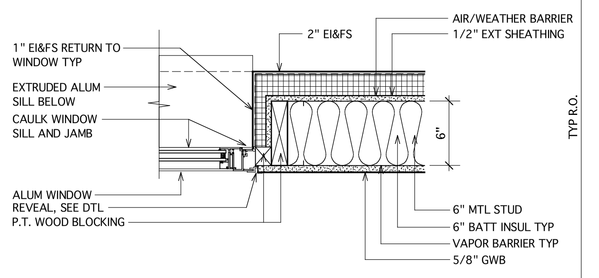

8 A-602 WINDOW JAMB DETAIL @ EI&FS
Scale: 1 1/2"= 1'-0"

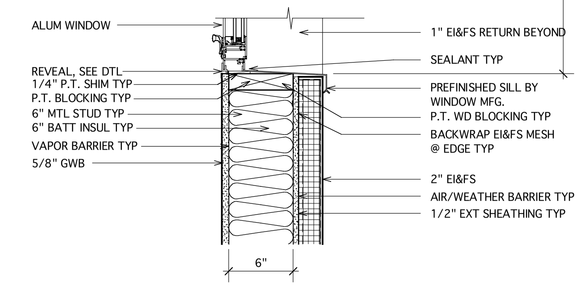

7 A-602 WINDOW SILL DETAIL @ EI&FS
Scale: 1 1/2"= 1'-0"

Design Firm

HKTA / architects, inc.
4 Milk Street
Portland, Maine 04101
phone: 207. 774. 6016
fax: 207. 774. 1703
e-mail: hkta@aol.com
HKTA / a r c h i t e c t s

Consultant

REGISTERED ARCHITECT
BRIAN O'DONNELL
No. 1483
STATE OF MAINE

Project Title

ORTHOPAEDIC ASSOCIATES, PA
BUILDING EXPANSION
33 SEWALL STREET
PORTLAND, MAINE

Mark	Date	Description

Issue/Revision	
Project ID	20020018OA
CAD File Name	20020018 OA Phase 1
Drawn By	EJR
Checked By	Checked By
Issue Date:	4/15/03
Plot Date:	4/14/03
Reviewed by	Checked By
Designed by	EJR
Submitted By	Submitted By
Drawing Code	Arch Det/Sched-2

Sheet Title
Window Schedule & Details

Drawing No.
A-602
of 34