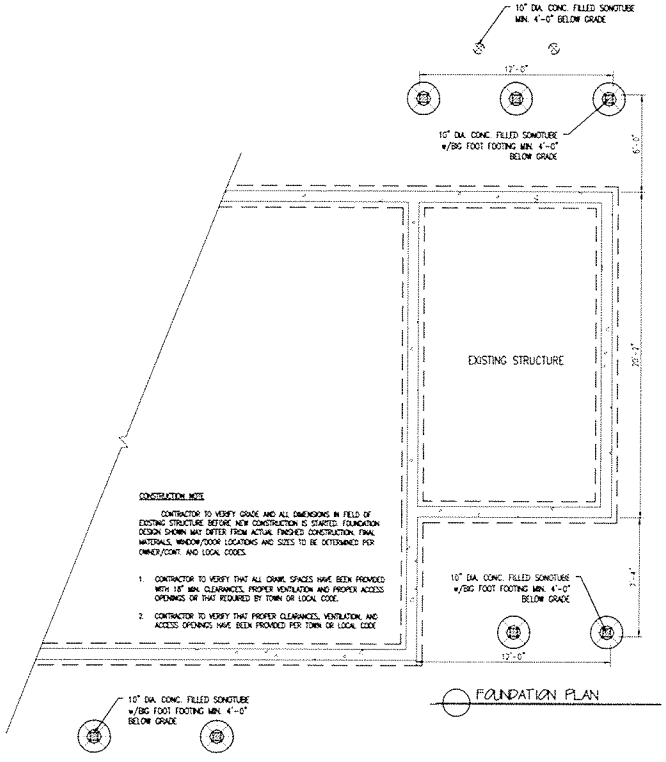

FOUNDATION PLAN

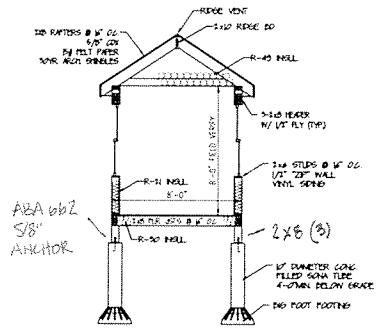

PORTICO CROSS-SECTION

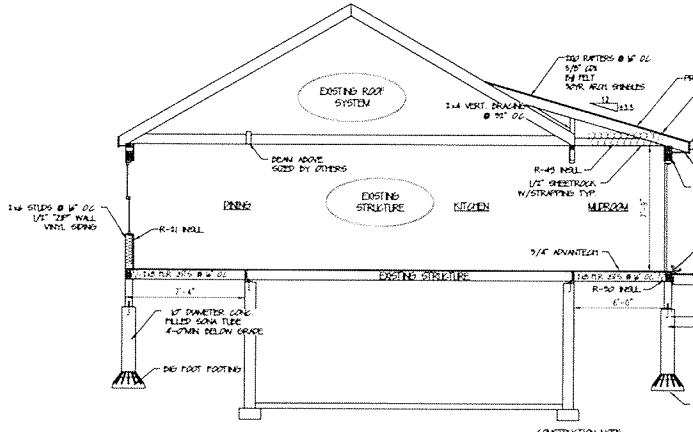

HOUSE CROSS-SECTION

CONSTRUCTION NOTE

CONTRACTOR TO VERIFY GRADE
DIMENSIONS OF EXISTING STRUCTURE
BEFORE STARTING NEW CONSTRUCTIO
SHOWN MAY DIFFER FROM ACTUAL FI
CONSTRUCTION. FINAL MATERIALS, WIN
LOCATIONS AND SIZES, TO BE DETERM
OWNER/CONT. AND LOCAL CODES.