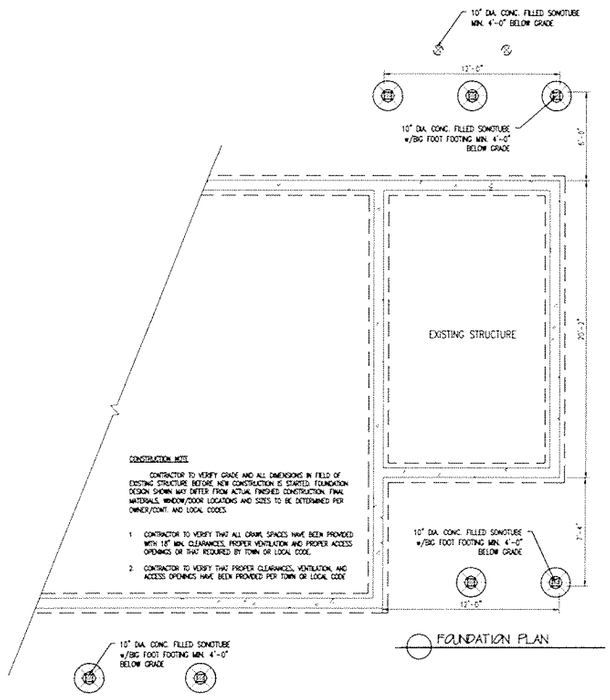

FOUNDATION PLAN

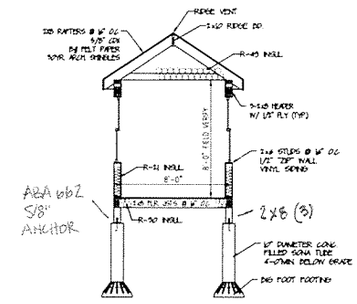

PORTICO CROSS-SECTION

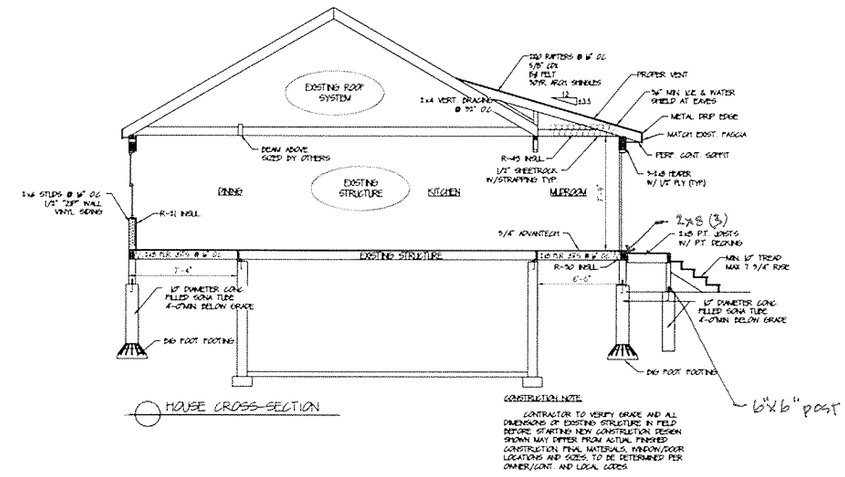

HOUSE CROSS-SECTION

CONSTRUCTION NOTE

CONTRACTOR TO VERIFY GRADE AND ALL DIMENSIONS OF EXISTING STRUCTURE IN FIELD BEFORE STARTING NEW CONSTRUCTION DESIGN SHOWN MAY DIFFER FROM ACTUAL FINISHED CONSTRUCTION. FINAL MATERIALS, WINDOW/DOOR LOCATIONS AND SIZES, TO BE DETERMINED PER OWNER/CONT. AND LOCAL CODES.

CITY OF PORTLAND, MAINE
RESURGAM

Reviewed for Code Compliance
Inspections Division
Approved with Conditions
Date: 11/14/17

FOUNDATION & SECTIONS - BERRY PROJECT
PORTLAND, ME
Casa Pro Builders

CUSTOMERS SHOULD APPRECIATE THAT THIS INFORMATION IS NOT THE PRODUCT OF AN ARCHITECT. NEITHER NOTEWORTHY DESIGNS NOR ANY OF ITS EMPLOYEES ARE REGISTERED ARCHITECTS AND CUSTOMERS MAY WANT TO CONSULT WITH AN ARCHITECT BEFORE TAKING FINAL ACTION WITH REGARD TO ANY BUILDING OR STRUCTURE. CUSTOMERS SHOULD ALSO APPRECIATE THAT BY PROVIDING CUSTOMERS WITH THIS INFORMATION, NOTEWORTHY DESIGNS DOES NOT GUARANTEE THE FITNESS OR SUITABILITY OF THE INFORMATION FOR ANY PURPOSE OF THE CUSTOMER.

Revisions:

m/d/y	#

Date : 6/19/17
Scale : 1/4"=1'-0"
Drawn By: TMS
Project: A041817
Sheet Number:
2-of-2