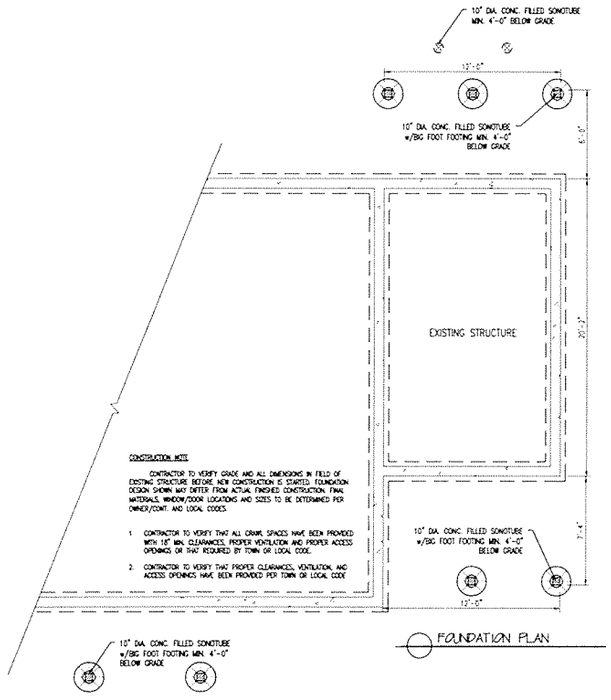

FOUNDATION PLAN

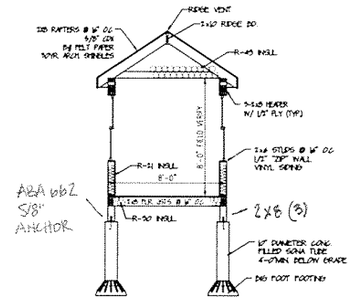

PORTICO CROSS-SECTION

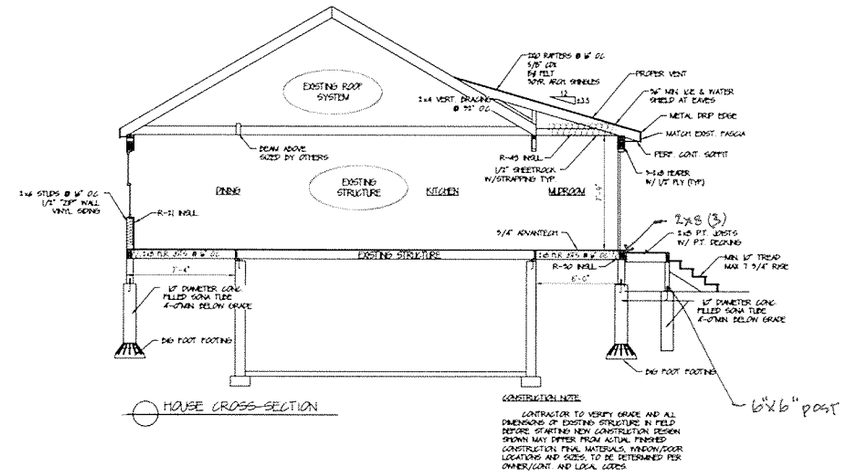

HOUSE CROSS-SECTION

CONSTRUCTION NOTE

CONTRACTOR TO VERIFY GRADE AND ALL DIMENSIONS OF EXISTING STRUCTURE IN FIELD BEFORE STARTING NEW CONSTRUCTION. DESIGN SHOWN MAY DIFFER FROM ACTUAL FINISHED CONSTRUCTION. FINAL MATERIALS, WINDOW/DOOR LOCATIONS AND SIZES TO BE DETERMINED PER OWNER/CONT. AND LOCAL CODES.

CUSTOMERS SHOULD APPRECIATE THAT THIS INFORMATION IS NOT THE PRODUCT OF AN ARCHITECT. WHEN A NOTEWORTHY DESIGN IS NOT ANY OF ITS EMPLOYEES ARE REGISTERED ARCHITECTS AND CUSTOMERS MAY WANT TO CONSULT WITH AN ARCHITECT BEFORE TAKING FINAL ACTION WITH REGARD TO ANY BUILDING OR STRUCTURE. CUSTOMERS SHOULD ALSO APPRECIATE THAT, BY PROVIDING CUSTOMERS WITH THIS INFORMATION, NOTEWORTHY DESIGNS DOES NOT GUARANTEE THE SOUNDNESS OR SUITABILITY OF THE INFORMATION FOR ANY PURPOSE OF THE CUSTOMER.

FOUNDATION & SECTIONS - BERRY PROJECT
PORTLAND, ME
Casa Pro Builders

Revisions:

mm/dd/yy	

Date : 6/19/17

Scale : 1/4"=1'-0"

Drawn By: TMS

Project: A041817

Sheet Number:

2-of-2