Cross Section, 1st - 2nd Floor,

RESURGAM CITY OF PORTLAND, MAINE
Reviewed for Code Compliance
Inspections Division
Approved with Conditions
Date: 01/17/14

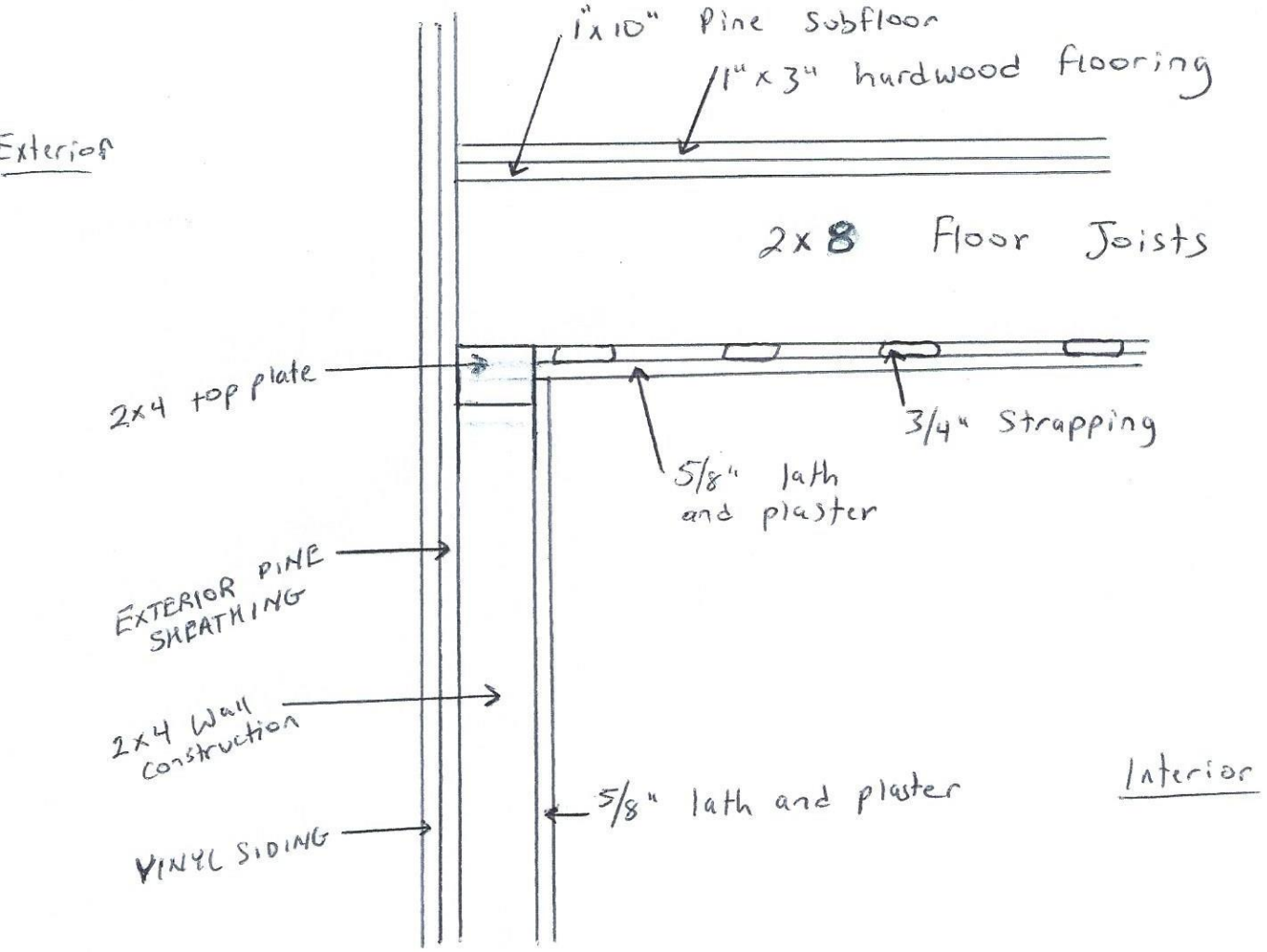

No ceilings or walls have insulation.