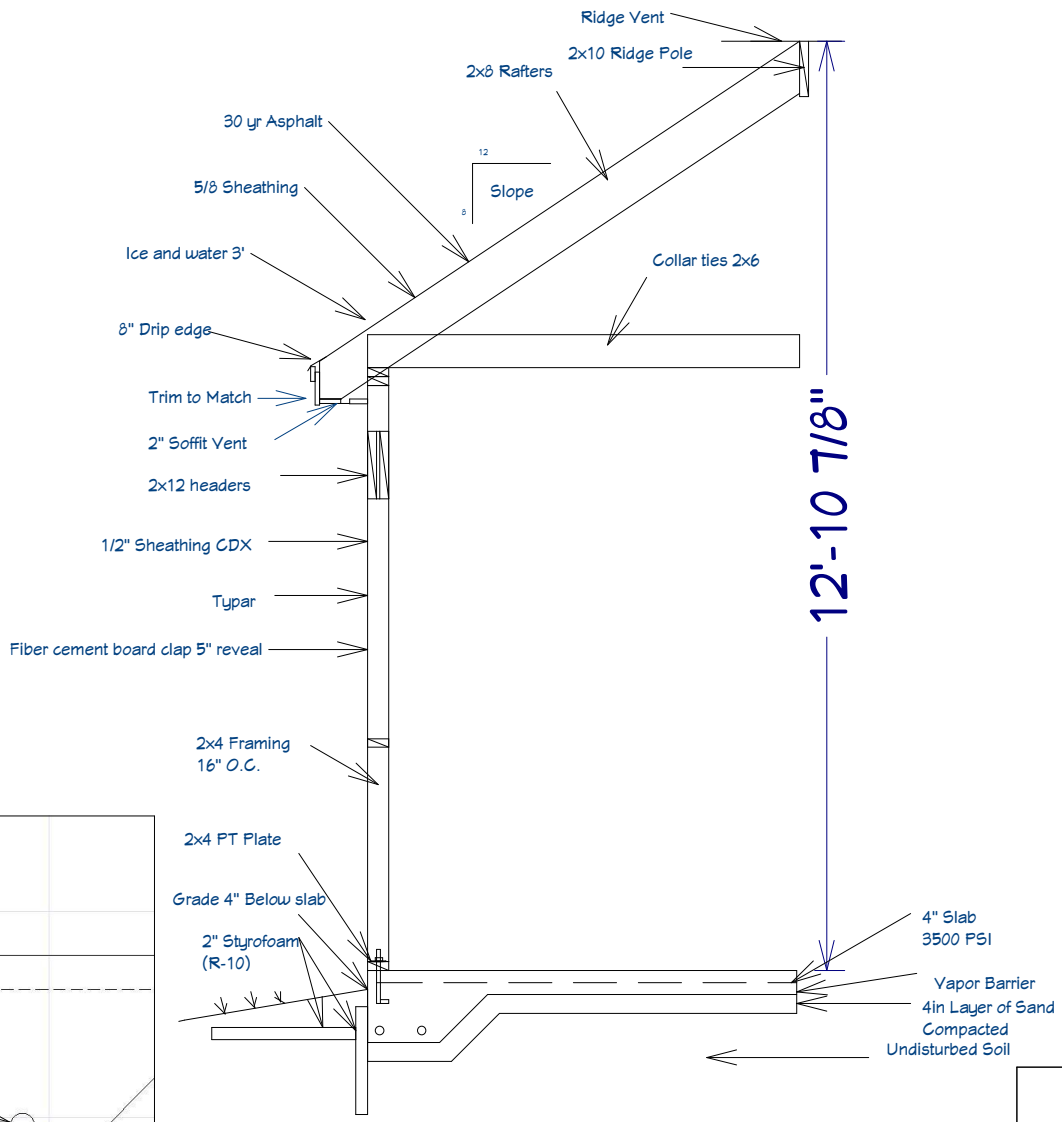

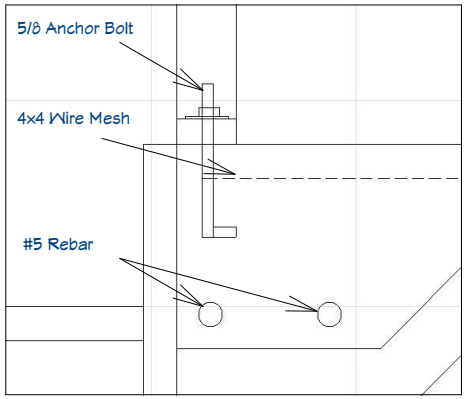

A12	Garage Cross Section
Date	11/08/14
Scale 3/8"=1'	