GENERAL NOTES:

1. The notes on the drawings are not intended to replace specifications. in addition to general notes. See specifications for requirements
2. Structural drawings shall be used in conjunction with job specifications and architectural, mechanical, electrical, plumbing, and site drawings. Consult, openings, chases, inserts, reglets, sleeves, depressions, and other details not shown on structural drawings.
3. All dimensions and conditions must be verified in the field. Any discrepancies shall be brought to the attention of the engineer before proceeding with the affected part of the work.
4. Do not scale plans.
5. Sections and details shown on any structural drawings shall be considered typical for similar conditions.
6. All proprietary products shall be installed in accordance with the manufacturers written instructions.
7. The structure is designed to be self supporting and stable after the erection is complete. It is the contractor's sole responsibility to determine erection procedures and sequencing to ensure the safety of the building and its components during erection. This includes the addition of necessary shoring, sheeting temporary bracing, guys or tiedowns. Such material shall remain the property of the contractor after completion of the project.
8. All applicable federal, state, and municipal regulations shall be followed, including the federal department of labor occupational safety and health act.

DESIGN LOADS:

1. Building code: IRC (2009) International Residential Building Code.
2. Design Live Loads: (Ground Snow load = 50 psf)
   Roof ..... 45 psf + drift as applicable
3. Design wind loads are based on exposure B using 100 mph basic wind speed.
4. Seismic Design Utilizes Analysis Procedure shall be equivelant Lateral Force Proceedure per IRC 2009

CONCRETE NOTES:

1. All concrete work shall conform to ACI 318–Latest Edition.
2. Concrete strength at 28 days shall be 3000 psi.
3. All concrete shall be air entrained 4% to 6% per the specifications.
4. Concrete shall not be placed in water or on frozen ground.
5. Provide PVC sleeves where pipes pass through concrete walls or slabs.
6. Reinforcing bars shall conform to ASTM A615 Grade 60 deformed bars, and shall be detailed, fabricated and erected in accordance with ACI 315–Latest edition.
7. Welded wire fabric shall be provided in flat sheets.
8. Fiber reinforced concrete shall conform to ASTM C–1116.
9. Splices of reinforcing bars shall be in accordance with ACI 318. Splices of WWF shall be 6" minimum.
10. Concrete finishes: Smooth trowel finish. (Coordinate w/owner)
11. Anchor bolts shall conform to ASTM A307 hot dipped galvanized unless noted otherwise on plan.
12. The general contractor shall be responsible for coordination of door bondout locations, slab depression & other required bondouts. Coordinate location of bondouts with Architectural, Mechanical & Plumbing, Electrical and kitchen equipment vendors as necessary to properly install each specific item.

FOUNDATION NOTES:

1. Foundations have been designed with a presumptive soil bearing capacity of 2000 psf to be verified by the general contractor in the field.
2. Interior spread footings and exterior strip footings shall be founded on undisturbed native soil or compacted structural fill.
3. Slabs on grade shall bear on a minimum of 12" of compacted structural fill or compacted ⅜" crushed stone. If loose or undesirable fills are encountered at the slab subgrade level, they shall be over excavated to the surface of the natural soil and replaced with structural fill. Refer to drawings and specifications for vapor barrier requirements. Moist cure slabs in accordance with ACI.
4. Structural fill shall be used at all locations below footings and slabs and adjacent to the foundation walls. Prior to placement of structural fill, remove all topsoil and other unsuitable material. Compacted structural fill shall consist of clean granular material free of organics, loam, trash, snow, ice, frozen soil or any other objectionable material. It shall be well graded within the following limits:

SCREEN OR SIEVE SIZE	PERCENT FINER BY WEIGHT
6 INCH	100
3 INCH	70–100
NO. 4	35–70
NO. 40	5–35
NO. 200	0–5

5. Structural fill (or ⅜" crushed stone) beneath slabs shall be placed in layers not exceeding 6 inches in loose measure and compacted by self–propelled compaction equipment at approximate optimum moisture content to a dry density of at least 95% of the maximum in place dry density as determined by the modified proctor test (ASTM D–1557). For structural fill or 100% of the rodded unit weight as determined by ASTM C–29 for ⅜" crushed stone.

STRUCTURAL STEEL NOTES:

1. Structural steel fabrication, erection, and connection design shall conform to AISC "Specification for the design, fabrication, and erection of structural steel"–Ninth edition.
2. Structural steel:
   a) Structural steel shall conform to ASTM A–36.
   b) Structural tubing shall conform to ASTM A–500 GR–B
   c) Structural pipe shall conform to ASTM A–53, TYPE E OR S
3. The fabricator shall design connections for the reactions shown on the drawings or the maximum end reaction that can be produced by a laterally supported uniformly loaded beam for each given beam size and span.
4. Field connections shall be bolted using 3/4" diameter ASTM A325 high strength bolts except where field welding is indicated on the drawings.
5. All welding shall conform to AWS D1.1–Latest edition. Welding electrodes shall be E70XX.
6. Structural Steel Primer Paint. TNEMEC 10–99 Alkyd rust inhibitive primer, 2.0 to 3.5 mils dry thickness, or approved alternate.

TIMBER FRAMING:

1. All Timber framing shall be in accordance with the AITC timber construction manual or the national design specification (NDS) – latest edition
2. Individual timber framing members shall be visually graded, minimum grade #2 Spruce–Pine–Fir (SPF), kiln dried to 19% maximum moisture content.
3. Timber shall be southern yellow pine treated with ACQ water borne preservative in accordance with AWPA treatment C1 with 0.40 PCF retainage for items in contact with roofing, masonry or concrete with 0.60 PCF retainage for items in contact with earth.
4. Metal connectors shall be used at all timber to timber connections or as noted on the design drawings. All metal connectors in contact with pressure treated timber shall be stainless steel.
5. Provide Simpson H2.5A hurricane anchors where timber framing and/or trusses bear on bearing wall and structural beams.
6. Nails and screws not specified shall conform with IBC 2009. All nails and screws in contact with pressure treated timber shall be stainless steel.
7. Provide ½" thick APA rated exterior wall sheathing fastened w/ 10d nails @ 4" o.c. at panel edges and 6" o.c. intermediate (typ uon in plan). Lap sheathing 1'–0" minimum over existing structure (Where applicable).
8. Provide ⅝" thick APA rated roof sheathing fastened w/ 10d nails @ 6" o.c. at panel edges and intermediate.
9. Provide ¾" thick APA rated floor sheathing fastened w/ construction adhesive and 10d ring shank nails @ 6" o.c. at panel edges and intermediate.
10. LVL indicated laminated veneer lumber beams manufactured by Boise Cascade or approved equal.

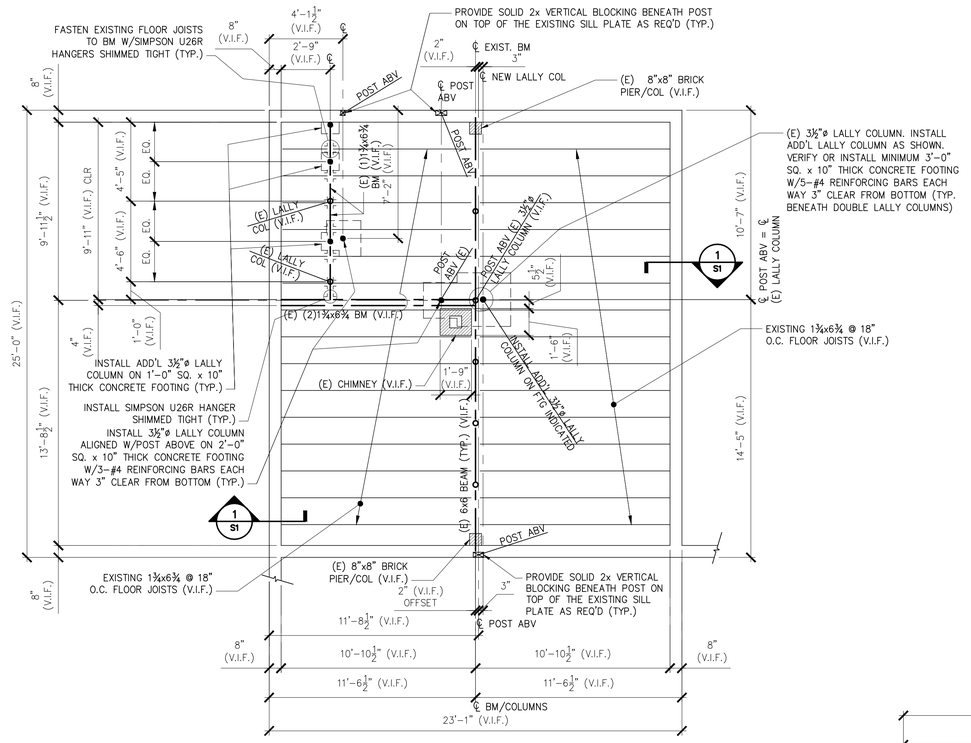

FOUNDATION AND FIRST FLOOR FRAMING PLAN

1/4" = 1'-0"

NOTES:
1. "V.I.F." INDICATES: G.C. SHALL "VERIFY IN FIELD" THE DIMENSION, ELEVATION, AND/OR CONDITION PRIOR TO PROCEEDING WITH THE EFFECTED PORTION OF WORK.
2. "E" INDICATES: "EXISTING" MEMBER
3. "●" INDICATES: NEW 3½"ø LALLY COLUMN
4. "○" INDICATES: EXISTING 3½"ø LALLY COLUMN

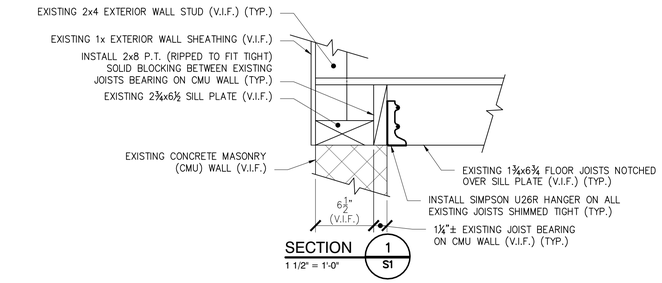

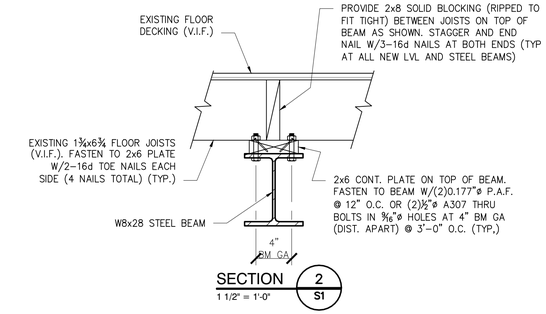

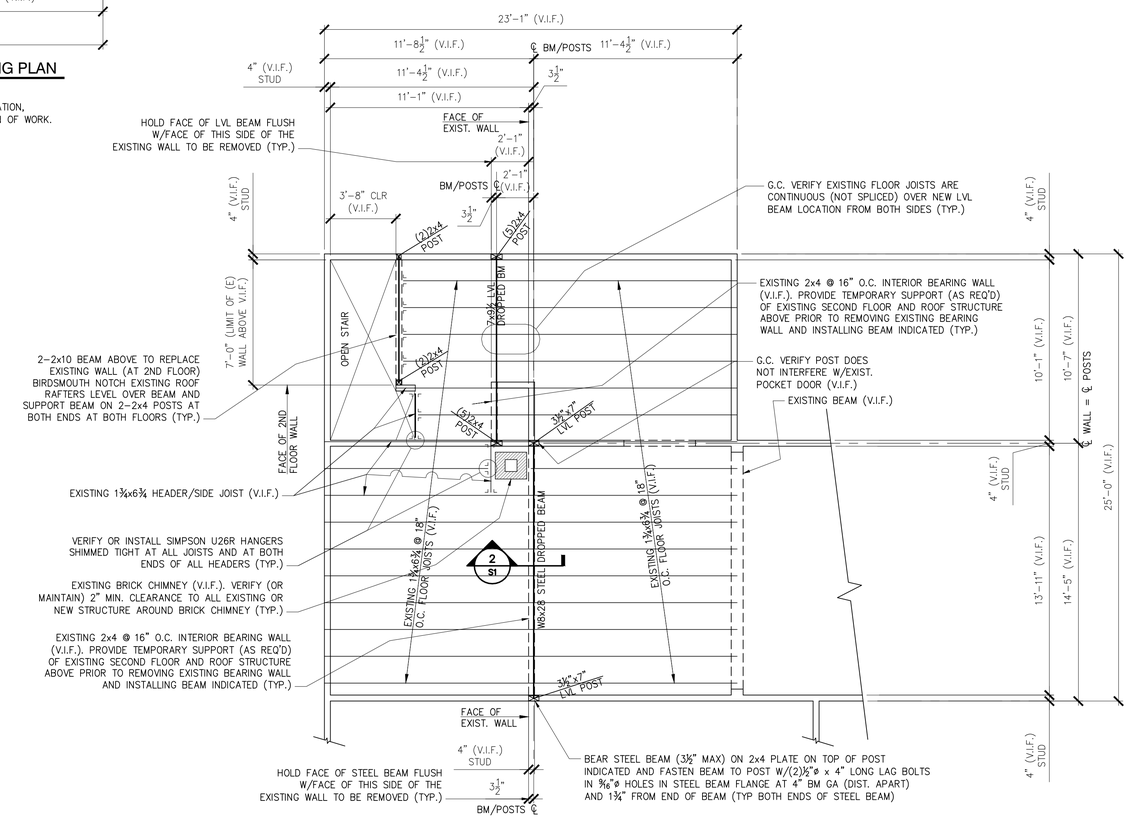

SECOND FLOOR FRAMING PLAN

1/4" = 1'-0"

THESE DRAWINGS HAVE BEEN DEVELOPED BY L&L STRUCTURAL ENGINEERING SERVICES, INC. FOR THE TITLED SET ONLY. THE DRAWINGS ARE THE SOLE PROPERTY OF L&L ENGINEERING SERVICES, INC. AND THEY SHALL NOT BE USED, LENT, COPIED OR ALTERED WITHOUT THE WRITTEN CONSENT OF L&L STRUCTURAL ENGINEERING SERVICES, INC.

Reviewed for Code Compliance
Inspections Division
Approved with Conditions
Date: 07/31/14

L & L STRUCTURAL
ENGINEERING SERVICES, INC.
SIX Q STREET
SOUTH PORTLAND, MAINE
PHONE: (207) 767–4830
FAX: (207) 799–5432

STATE OF MAINE
JOSEPH H. LEASURE
No. 6242
LICENSED
PROFESSIONAL ENGINEER

rev.	date	description	appr'd

designed by: JHL
drawn by: RJW
checked by: JHL
scale: AS NOTED
date: 07/07/2014
plot date: 07/07/2014
project #: 2014–092

RESIDENTIAL BUILDING LOCATED AT
80 WHITNEY AVE.
PORTLAND, MAINE

FIRST FLOOR RENOVATIONS
FOUND., 1ST, & 2ND FLOOR FRAM. PLANS, SECTIONS & DTLS

S1