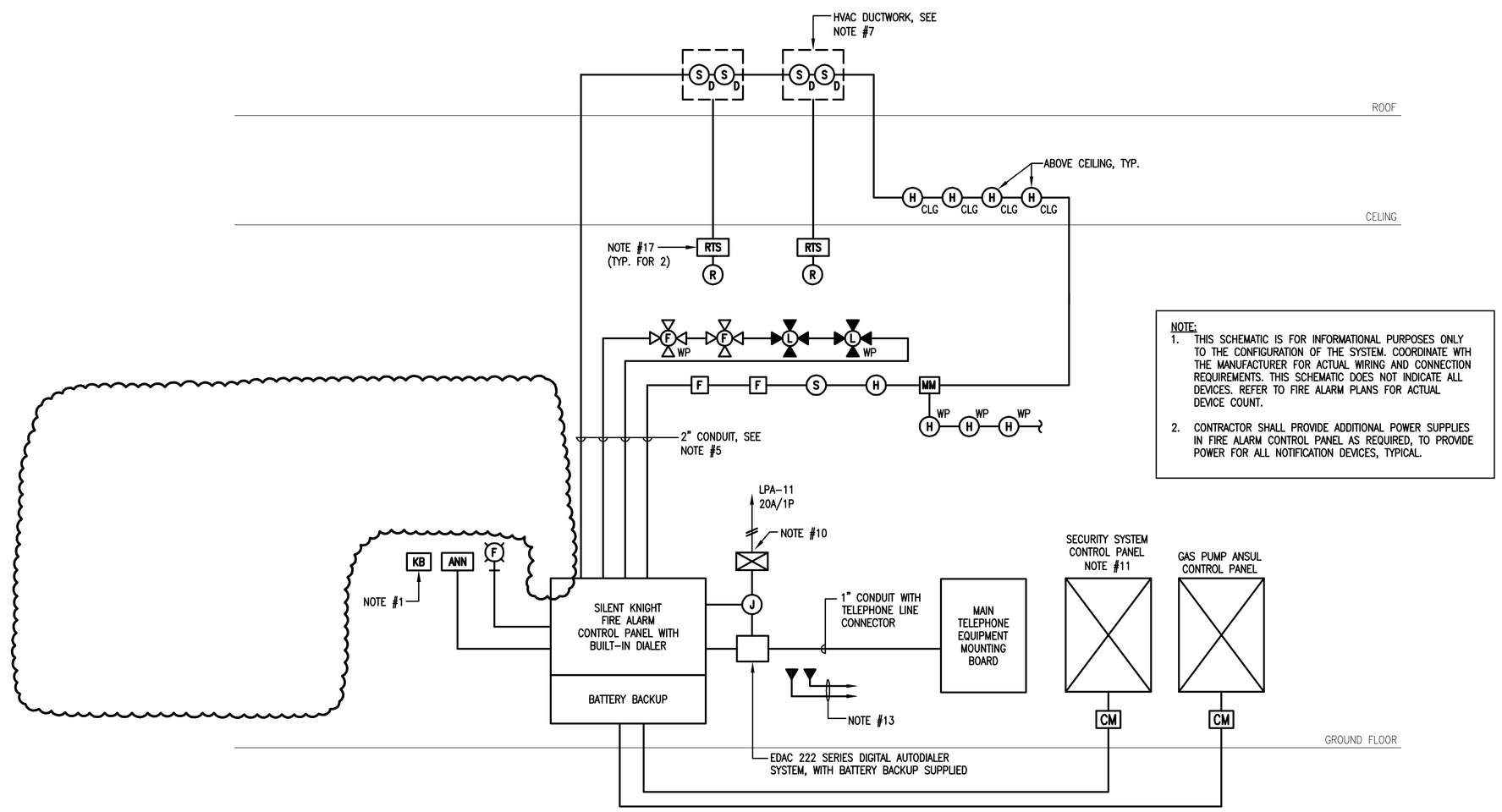

NOTE:
1. THIS SCHEMATIC IS FOR INFORMATIONAL PURPOSES ONLY TO THE CONFIGURATION OF THE SYSTEM. COORDINATE WTH THE MANUFACTURER FOR ACTUAL WIRING AND CONNECTION REQUIREMENTS. THIS SCHEMATIC DOES NOT INDICATE ALL DEVICES. REFER TO FIRE ALARM PLANS FOR ACTUAL DEVICE COUNT.
2. CONTRACTOR SHALL PROVIDE ADDITIONAL POWER SUPPLIES IN FIRE ALARM CONTROL PANEL AS REQUIRED, TO PROVIDE POWER FOR ALL NOTIFICATION DEVICES, TYPICAL.

FIRE ALARM RISER DIAGRAM
N.T.S.

FIRE ALARM SYSTEM OPERATION SCHEDULE

DEVICE TYPE \ ACTION TAKEN	TRANSMIT ALARM TO FIRE DEPARTMENT		INITIATE AUTO ZONE VERIFICATION SEQUENCE	SOUND TONE THROUGH AUDIBLE DEVICE	FLASH VISUAL FIRE WARNING SIGNALS	SHUT DOWN RESPECTIVE MECHANICAL UNIT	INITIATE REMOTE INDICATOR	IDENTIFY ACTIVATION AT CONTROL PANEL	SOUND ALARM AT CONTROL PANEL	IDENTIFY ACTIVATION AT ANNUNCIATOR
MANUAL PULL STATION	•		•	•			•	•	•
SMOKE DETECTORS		•					•	•	•
DUCT TYPE SMOKE DETECTORS	•		•	•	•	•	•	•	•
HEAT DETECTORS	•		•	•			•	•	•
SUPERVISORY CIRCUIT							•	•	•
TROUBLE CIRCUIT							•	•	•

NOTES:
ALL EVENTS SHALL BE RECORDED AT THE FIRE ALARM CONTROL PANEL AND SHALL INDICATE TIME AND DATE OF OCCURRENCE AND LIST DEVICE INITIATED.

NOTES:

1. PROVIDE KEY BOX. ELECTRICAL CONTRACTOR SHALL PURCHASE THROUGH LOCAL FIRE DEPARTMENT.
2. ELECTRICAL CONTRACTOR SHALL PROVIDE CIRCUIT BREAKER HANDLE-LOCK ON POWER CIRCUITS. HANDLE LOCK SHALL ALLOW THE CIRCUIT BREAKER TO TRIP, BUT PREVENT SWITCHING OF THE CIRCUIT BREAKER TO THE "OFF" POSITION.
3. PROVIDE SMOKE DETECTOR IN VICINITY OF FIRE ALARM CONTROL PANEL, REMOTE ANNUNCIATOR, AND ALL FIRE ALARM TERMINAL BOXES.
4. MINIMUM SIZE CONDUIT SHALL BE 3/4" UNLESS NOTED OTHERWISE.
5. ALL SYSTEM WIRING SHALL BE INSTALLED IN CONDUIT (FIRE ALARM RATED FPLR METALLIC FLEXIBLE CONDUIT) AND IN ACCORDANCE WITH EQUIPMENT SUPPLIER'S APPROVED SHOP DRAWINGS AND WIRING DIAGRAMS.
6. RISER DIAGRAM DOES NOT SHOW ENTIRE SYSTEM. REFER TO FLOOR PLANS FOR EXACT QUANTITIES AND LOCATIONS OF ALL SYSTEM DEVICES.
7. TO AUXILIARY CONTACTS IN RESPECTIVE AIR-HANDLING UNIT STARTER FOR UNIT SHUTDOWN ON ALARM.
8. ELECTRICAL CONTRACTOR SHALL PROVIDE CONDUCTORS FOR THE FOLLOWING FIRE ALARM CONTROL PANEL CONTACTS: PUMP RUNNING, PHASE REVERSAL, PHASE FAILURE, ALARM SIGNAL AND TROUBLE SIGNAL.
9. ELECTRICAL CONTRACTOR SHALL PROVIDE 120VOLT POWER AND CONTROL WIRING TO ALL SMOKE/FIRE DAMPERS. REFER TO ELECTRICAL DRAWINGS FOR POWER WIRING REQUIREMENTS. "1" NEXT TO SMOKE/FIRE DAMPER INDICATES SMOKE ZONE. PROVIDE A MONITOR MODULE, CONTROL MODULE AND RELAY MODULE FOR EACH GROUP OF SMOKE/FIRE DAMPERS. FACP SHALL BE PROVIDED WITH FIRE DEPARTMENT CONTROLS TO ACTIVATE SMOKE DAMPERS BY ZONE. REFER TO ELECTRICAL DRAWINGS FOR QUANTITY OF SMOKE DAMPERS, AND SMOKE ZONES.
10. PROVIDE A 20AMP, 120VOLT, 1 PHASE SURGE PROTECTOR EQUAL TO MCG SURGE PROTECTION MODEL NO. 415. SURGE PROTECTOR SHALL BE INSTALLED BETWEEN THE CIRCUIT BREAKER IN THE PANEL AND THE FIRE ALARM PANEL, AND IN ACCORDANCE WITH MANUFACTURER'S WIRING RECOMMENDATIONS.
11. SECURITY/DOOR ENTRY SYSTEM SHALL BE CONNECTED TO FIRE ALARM SYSTEM VIA A CONTROL MODULE/RELAY. ELECTRIC DOOR STRIKE SHALL UNLOCK/RELEASE UPON ACTIVATION OF FIRE ALARM SYSTEM ALARM.
12. PROVIDE 4#24 DEDICATED TELEPHONE LINE TO ENABLE TROUBLE SIGNAL TRANSMISSION TO A U.L. APPROVED CENTRAL STATION.
13. ELECTRICAL CONTRACTOR SHALL CONTACT KEN TRIP AT UAS FOR PROGRAMMING COORDINATION OF FACP. 1-800-421-6661 EXT 274
14. ALL JUNCTION AND PULL BOXES AS WELL AS 6" OF ANY CONDUIT ENTERING OR LEAVING ANY PULL OR JUNCTION BOX SHALL BE PAINTED RED.
15. ELECTRICAL CONTRACTOR SHALL BE RESPONSIBLE FOR CONNECTING THE FIRE ALARM SYSTEM COMMUNICATION TO AN U.L. APPROVED CENTRAL STATION USING 4-#24 CAT3 CABLES.
16. ELECTRICAL CONTRACTOR SHALL UTILIZE ALARM VERIFICATION AS A STANDARD FEATURE FOR ALL ADDRESSABLE SMOKE DETECTORS.
17. ELECTRICAL CONTRACTOR COORDINATE FINAL LOCATION FOR REMOTE TEST SWITCHES WITH LOCAL FIRE DEPARTMENT.

Project Title:
Cumberland Farms
Store # 5613
512 Woodford Street

Portland, ME

Cumberland FARMS

100 Crossing Blvd
Framingham, Ma
tel 508 270 1400

Architect

phase zero design

40 TREMONT STREET, SUITE 62
DUXBURY, MASSACHUSETTS 02332
PHONE:(781) 452-7121
FAX:(860) 264-1628
WEBSITE: www.phasezerodesign.com

Seal

STATE OF MAINE
RAYMOND
No. 10240
LICENSED
PROFESSIONAL ENGINEER

Consultant

ENGINEERING DESIGN SERVICES INCORPORATED
141 Industrial Highway Slatersville, RI 02876
Tel (401) 765-7659 Fax (401) 765-2984

Revisions

No.	Date	Issued for
-	11/22/13	90% Review Set
	01/24/14	Bid and Permit
	04/03/14	ADDENDUM 01

Key Plan

Title
ELECTRICAL:
FIRE ALARM SCHEMATIC, NOTES & OPERATION SCHEDULE.

Date

Drawing No.

LS0.02

Cumberland Farms
Project No. 2113119