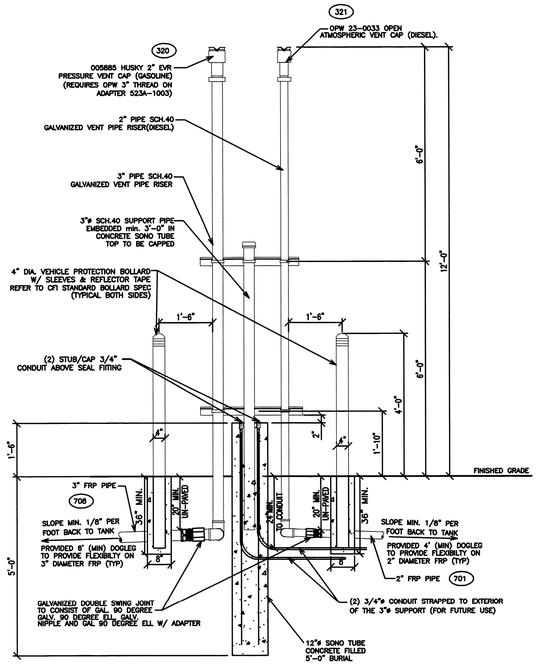

NEW VENT CLUSTER.

NOTE

1) ALL GALVANIZED STEEL PIPE IN CONTACT WITH BACKFILL SHALL BE COATED WITH 1/8" FIBERGLASS COATING, 1/8" EPOXY RESIN.
2) ALL PIPE, SUPPORTS AND HARDWARE TO BE GALVANIZED.

01 CFG14.5 VENT CLUSTER ELEVATION DETAIL

SCALE: 1/2" = 1'-0"

NOTE:

FRP DOGLEG
6'-0" MIN. STRAIGHT LENGTH OF PIPE (3" DIA. PIPE) FOLLOWING:
1) EACH PIPE CHANGE IN DIRECTION
2) EACH CONNECTION TO A FIXED POINT (TANK, DISPENSER, VENT)

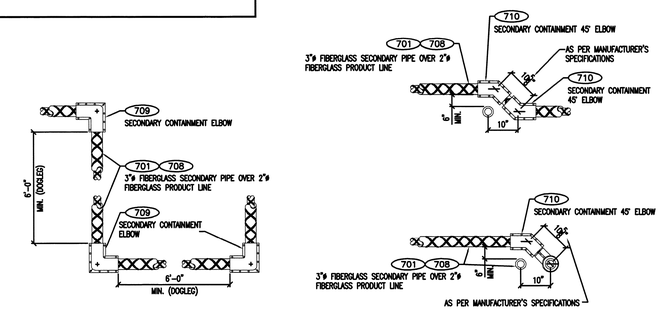

02 CFG14.5 TYPICAL PIPING DOGLEG AND CROSSOVER DETAILS

SCALE: N.T.S.

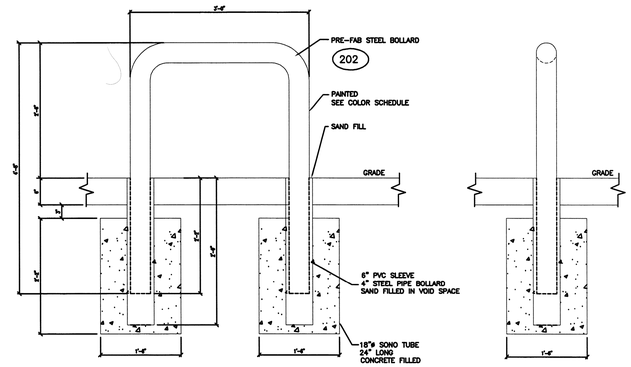

03 CFG14.5 TYPICAL U-SHAPED BOLLARD DETAIL

SCALE: 3/4" = 1'-0"

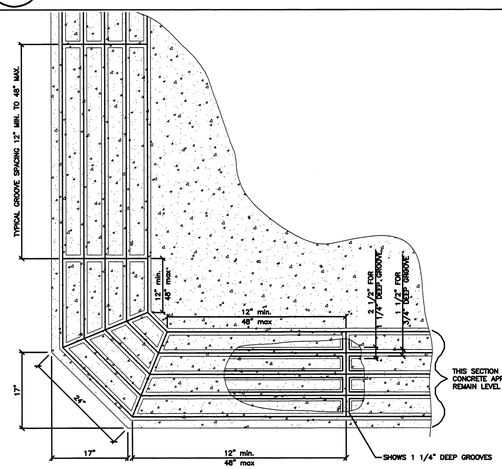

TYPICAL APRON CORNER AND GROOVE SPACING DETAIL

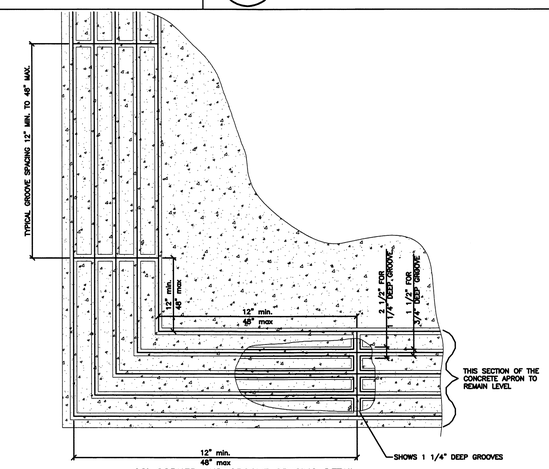

90° CORNER AND GROOVE SPACING DETAIL

NOTE:

1. THE POSITIVE LIMITING BARRIER TO BE 5 CONTINUOUS "V" GROOVES 3/4"x3/4" DEEP, ON 4 3/4" CENTERS WITH CROSS INTERCONNECTING GROOVES, EQUALLY SPACED ON MIN. 12" MAX. 48" CENTERS.
2. "V" GROOVES SHALL BE TROWELLED IN CONCRETE SLAB.
3. "V" GROOVES SHALL BE A CONSTANT WIDTH AND DEPTH FOR THE ENTIRE APRON.
4. GROOVES MUST BE KEPT CLEAN OF DIRT AND DEBRIS.
5. GENERAL CONTRACTOR TO REFER TO THE FIRE SUPPRESSION PLAN FOR PLB PLACEMENT.

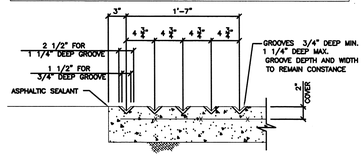

V-GROOVE EDGE OF SLAB SECTION

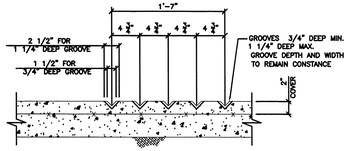

V-GROOVE INNER SLAB SECTION

05 CFG14.5 POSITIVE LIMITING BARRIER DETAILS

SCALE: N.T.S.

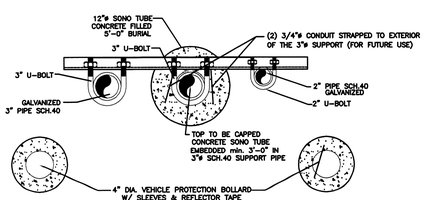

07 CFG14.5 VENT STACK PLAN VIEW

SCALE: 1/2" = 1'-0"

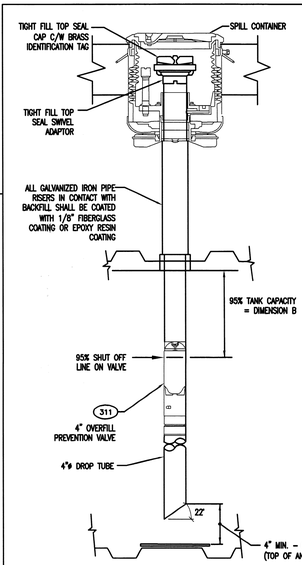

TANK	ACTUAL VOLUME (GAL.)	95% (ACTUAL) VOLUME (GAL)	DIM. A	DIM. B*	DIM. C*
DOUBLE WALL FRP TANK COMPARTMENT 12,000 GAL.-REGULAR MASTER & SLAVE (BASE TANK)	11,873	.95 (11,873) = 11,279	FIELD VERIFIED	13"	TBD
DOUBLE WALL FRP TANK COMPARTMENT 8,000 GAL.-SUPER & DIESEL (END TANK)	8,531	.95 (8,531) = 8,104	FIELD VERIFIED	11 5/8"	TBD

NOTE: GC IS RESPONSIBLE FOR FIELD VERIFYING ALL DIMENSIONS AND ENSURING THE OVERFILL PREVENTION VALVE IS INSTALLED PER ALL STATE AND MANUFACTURER'S REQUIREMENTS.
* BELOW THE TANK TOP (I.D.).
DIM. B CORRESPONDS TO 95% ACTUAL TANK VOLUME (FROM TANK CALIBRATION CHART)
DIM. C = A + B (TO DETERMINE THE TOP TUBE CUT LENGTH)

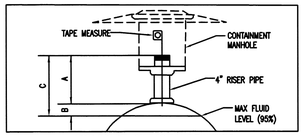

RISER PIPE WITH SPILL CONTAINMENT MANHOLE

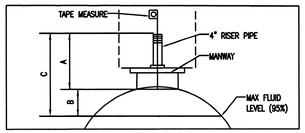

RISER PIPE INSTALLED ON MANWAY

06 CFG14.5 OVERFILL PREVENTION VALVE

SCALE: N.T.S.

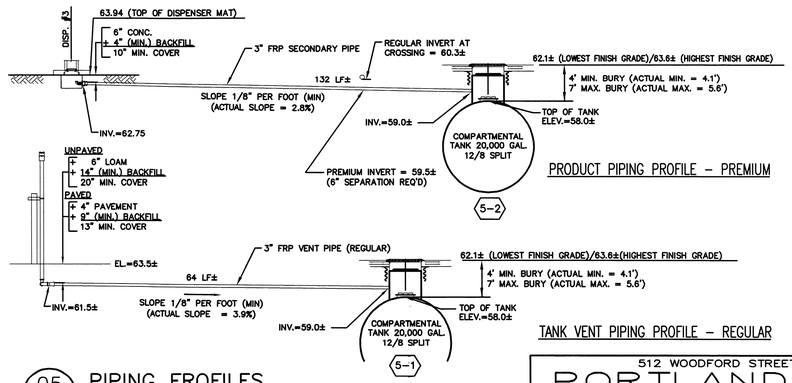

PRODUCT PIPING PROFILE - PREMIUM

TANK VENT PIPING PROFILE - REGULAR

05 CFG14.5 PIPING FROFILES

SCALE: N.T.S.

MHF Design Consultants, Inc.
44 Stiles Road, Suite One
Salem, New Hampshire 03079
(603) 893-0720
ENGINEERS • PLANNERS SURVEYORS
www.mhfdesign.com

STATE OF MAINE FRANK C. MONTEIRO 7201 LICENSED PROFESSIONAL ENGINEER

1/22/14

REVISIONS			
NO.	DATE	REV. BY.	DESCRIPTION

21,521 SQUARE FEET
.494 ACRES
V #1614
Store #5613
Gas Station #1848

512 WOODFORD STREET
PORTLAND, ME

FUEL GUIDELINE DRAWING SHEET NO. 5

DOUBLE WALL FIBERGLASS TANK INSTALLATION FOR:
TWO (2) 20,000 (12/8 SPLIT) GALLON TANKS

Cumberland FARMS

CUMBERLAND FARMS, INC.
100 Crossing Boulevard
Framingham, MA 01702

SCALE: 1" = 10'
DATE: JAN. 21, 2014
FILE: 3403 CFG14.5
DRAWN BY: HS

SUMP & PIPING DETAILS

CFG14.5

MHF PROJECT NO. 340313 SHEET 6 OF 8

F:\Projects\CAD\340313\UST PLANS\3403 CFG14.5.dwg CFG14.5 1/22/14 6:24pm hs