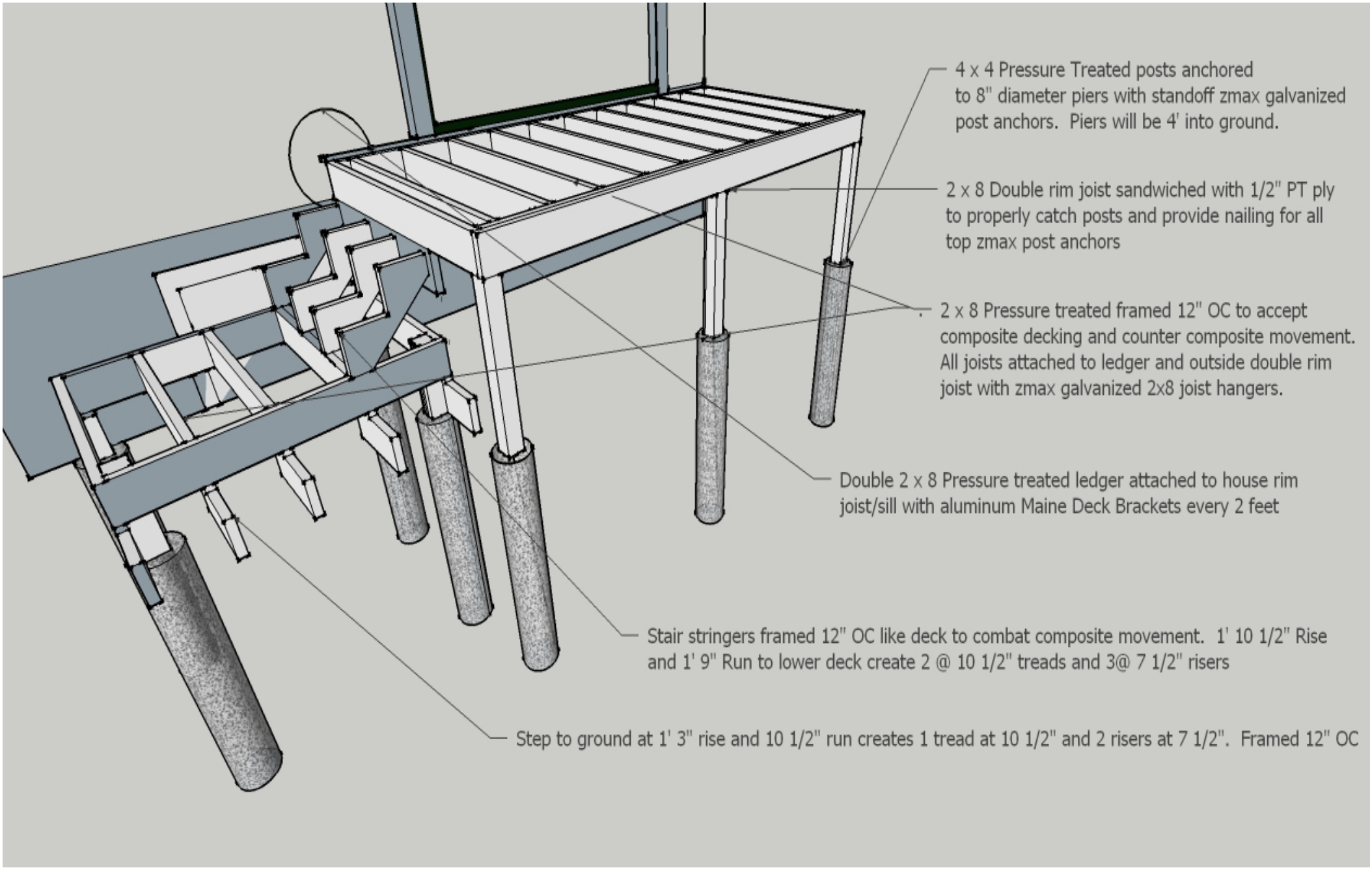
4 x 4 Pressure Treated posts anchored to 8" diameter piers with standoff zmax galvanized post anchors. Piers will be 4' into ground.
2 x 8 Double rim joist sandwiched with 1/2" PT ply to properly catch posts and provide nailing for all top zmax post anchors
2 x 8 Pressure treated framed 12" OC to accept composite decking and counter composite movement. All joists attached to ledger and outside double rim joist with zmax galvanized 2x8 joist hangers.
Double 2 x 8 Pressure treated ledger attached to house rim joist/sill with aluminum Maine Deck Brackets every 2 feet
Stair stringers framed 12" OC like deck to combat composite movement. 1' 10 1/2" Rise and 1' 9" Run to lower deck create 2 @ 10 1/2" treads and 3@ 7 1/2" risers
Step to ground at 1' 3" rise and 10 1/2" run creates 1 tread at 10 1/2" and 2 risers at 7 1/2". Framed 12" OC