GENERAL NOTES:

1. The notes on the drawings are not intended to replace specifications. in addition to general notes. See specifications for requirements
2. Structural drawings shall be used in conjunction with job specifications and architectural, mechanical, electrical, plumbing, and site drawings. Consult, openings, chases, inserts, reglets, sleeves, depressions, and other details not shown on structural drawings.
3. All dimensions and conditions must be verified in the field. Any discrepancies shall be brought to the attention of the engineer before proceeding with the affected part of the work.
4. Do not scale plans.
5. Sections and details shown on any structural drawings shall be considered typical for similar conditions.
6. All propietary products shall be installed in accordance with the manufacturers written instructions.
7. The structure is designed to be self supporting and stable after the erection is complete. It is the contractor's sole responsibility to determine erection procedures and sequencing to ensure the safety of the building and its components during erection. This includes the addition of necessary shoring, sheeting temporary bracing, guys or tiedowns. Such material shall remain the property of the contractor after completion of the project.
8. All applicable federal, state, and municipal regulations shall be followed, including the federal department of labor occupational safety and health act.

DESIGN LOADS:

1. Building code: IRC (2009) International Residential Building Code.
2. Design Live Loads: (Ground Snow load = 60 psf)
   Roof ..... 45 psf + drift as applicable
   Floor ..... 40 psf
3. Design wind loads are based on exposure B using 100 mph basic wind speed.
4. Seismic Design per IRC 2009

TIMBER FRAMING:

1. All Timber framing shall be in accordance with the AITC timber construction manual or the national design specification (NDS) – latest edition
2. Individual timber framing members shall be visually graded, minimum grade #2 Spruce–Pine–Fir (SPF), kiln dried to 19% maximum moisture content.
3. Timber shall be southern yellow pine treated with ACQ water borne preservative in accordance with AWPA treatment C1 with 0.40 PCF retainage for items in contact with roofing, masonry or concrete with 0.60 PCF retainage for items in contact with earth.
4. Metal connectors shall be used at all timber to timber connections or as noted on the design drawings. All metal connectors in contact with pressure treated timber shall be stainless steel.
5. Provide Simpson H2.5A hurricane anchors where timber framing and/or trusses bear on bearing wall and structural beams.
6. Nails and screws not specified shall conform with IBC 2009. All nails and screws in contact with pressure treated timber shall be stainless steel.
7. Provide ½" thick APA rated exterior wall sheathing fastened w/ 10d nails @ 4" o.c. at panel edges and 6" o.c. intermediate (typ uon in plan). Lap sheathing 1'–0" minimum over existing structure (Where applicable).
8. Provide ⅝" thick APA rated roof sheathing fastened w/ 10d nails @ 6" o.c. at panel edges and intermediate.
9. Provide ¾" thick APA rated floor sheathing fastened w/ construction adhesive and 10d ring shank nails @ 6" o.c. at panel edges and intermediate.
10. LVL indicated laminated veneer lumber beams manufactured by Boise Cascade or approved equal.

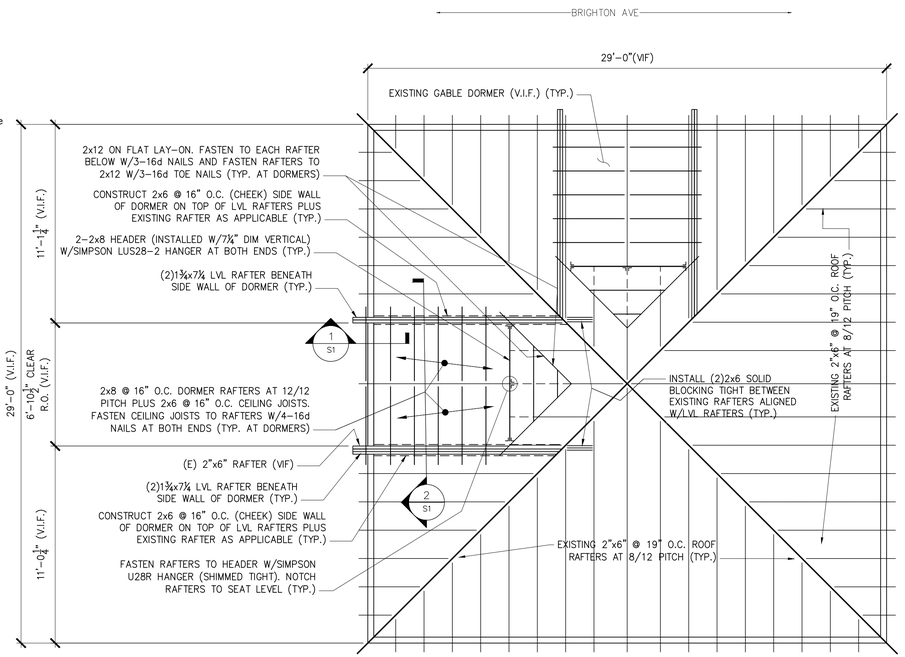

ROOF FRAMING PLAN

1/4" = 1'-0"

NOTES:
1. SEE GENERAL NOTES ON DWG S1.
2. "E" INDICATES: EXISTING CONDITIONS, OR MEMBERS.
3. "TYP." INDICATES: TYPICAL (ALSO SEE GENERAL NOTE #5).
4. "V.I.F." INDICATES: G.C. SHALL "VERIFY IN FIELD" EXISTING DIMENSIONS, ELEVATIONS, OR CONDITIONS INDICATED AND REPORT ANY DISCREPANCIES TO THE ENGINEER.
5. "U.O.N." INDICATES: UNLESS OTHERWISE NOTED.

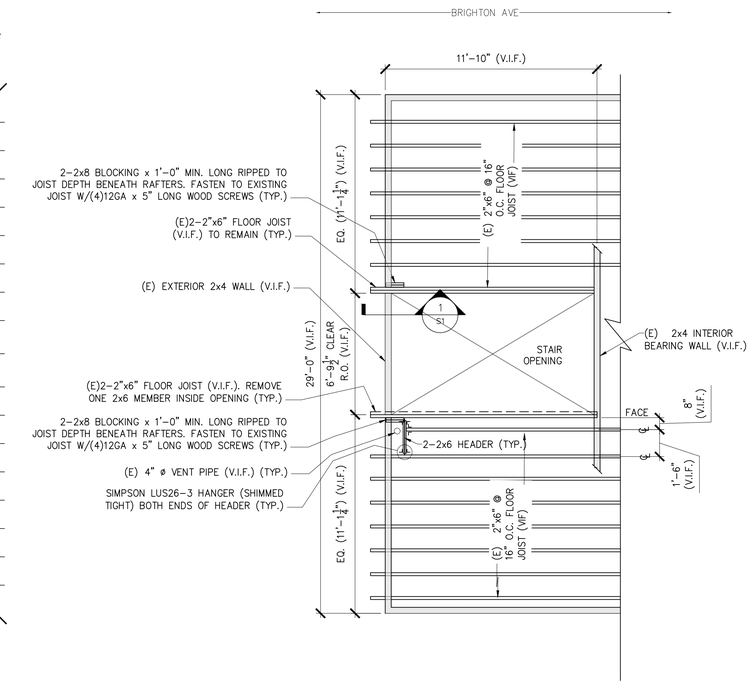

PARTIAL ATTIC FLOOR FRAMING PLAN

1/4" = 1'-0"

NOTES:
1. SEE GENERAL NOTES ON DWG S1.
2. "E" INDICATES: EXISTING CONDITIONS, OR MEMBERS.
3. "TYP." INDICATES: TYPICAL (ALSO SEE GENERAL NOTE #5).
4. "V.I.F." INDICATES: G.C. SHALL "VERIFY IN FIELD" EXISTING DIMENSIONS, ELEVATIONS, OR CONDITIONS INDICATED AND REPORT ANY DISCREPANCIES TO THE ENGINEER.
5. "U.O.N." INDICATES: UNLESS OTHERWISE NOTED.

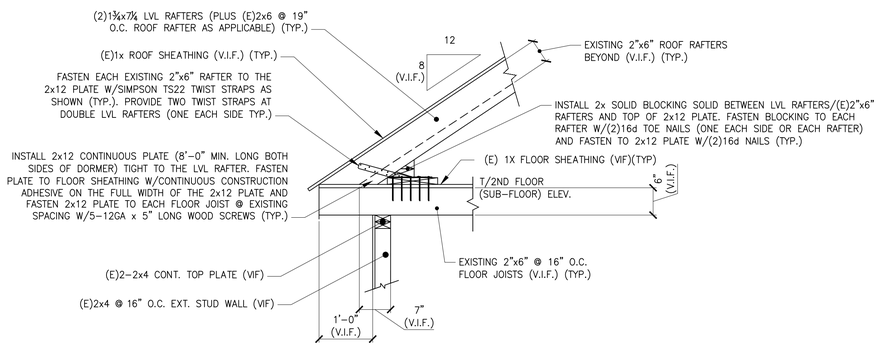

SECTION 1/S1
3/4" = 1'-0"

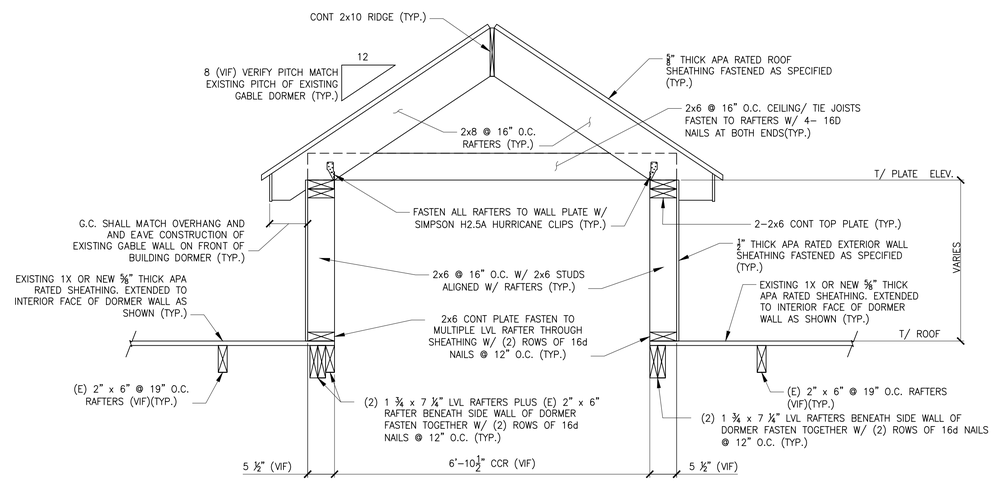

SECTION 2/S1
3/4" = 1'-0"

THESE DRAWINGS HAVE BEEN DEVELOPED BY L&L STRUCTURAL ENGINEERING SERVICES, INC. FOR THE TITLED SET ONLY. THE DRAWINGS ARE THE SOLE PROPERTY OF L&L ENGINEERING SERVICES, INC. AND THEY SHALL NOT BE USED, LENT, COPIED OR ALTERED WITHOUT THE WRITTEN CONSENT OF L&L STRUCTURAL ENGINEERING SERVICES, INC.

L & L STRUCTURAL
ENGINEERING SERVICES, INC.
SIX Q STREET
SOUTH PORTLAND, MAINE 04106
PHONE: (207) 767–4830
FAX: (207) 799–5432
EMAIL: JLEASURE@L–ENG.COM

STATE OF MAINE
JOSEPH H. LEASURE
No. 6242
LICENSED
PROFESSIONAL ENGINEER

rev.	date	description	appr'd
A	10/3/16	PERMIT AND PRICING	

designed by: JHL
drawn by: JH, RJW
checked by: JHL
scale: AS NOTED
date: 10/3/2016
plot date: 10/3/2016
project #: 2016–159

BUILDING LOCATED AT
491 BRIGHTON AVE
PORTLAND, ME

DORMER ADDITION
ROOF & ATTIC FRAMING PLANS, SECTIONS, & DETAILS

S1