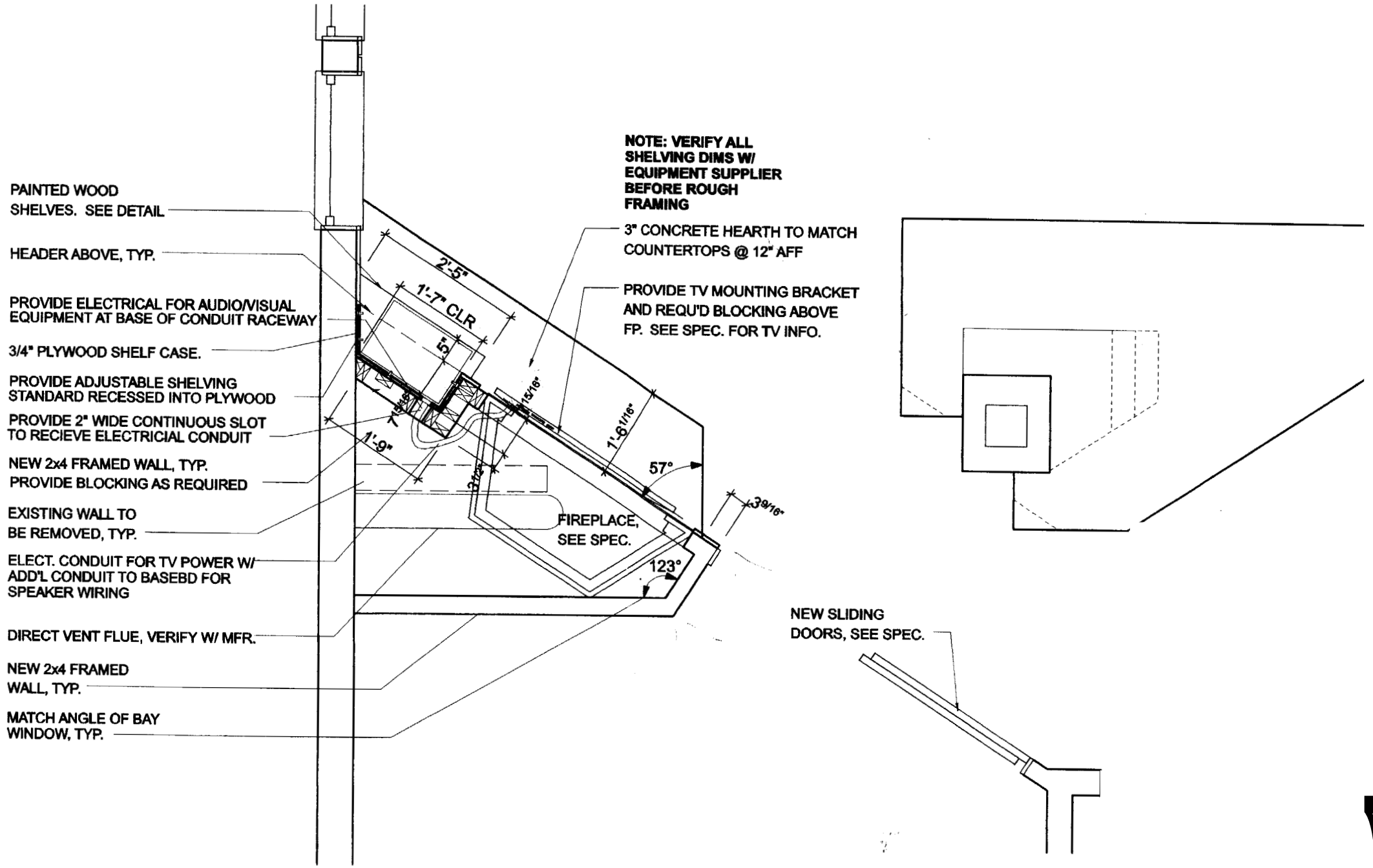

ENLARGED FIREPLACE PLAN

SCALE = 1/2" = 1'-0"

PHIL KAPLAN
ARCHITECT
424 FORE ST., PORTLAND, ME 04101
207-842-2888 FAX:842-2828

PROJECT:

MARTY LAYNE & PATTY BIRD
HOME REMODEL
37 ROSEMONT AVENUE
PORTLAND, MAINE 04103

DRAWING: ENLARGED FIREPLACE PLAN

SCALE: 1/2" = 1'-0"

0 1' 2' 4'

DATE: FRIDAY, JULY 8, 2005

A-101

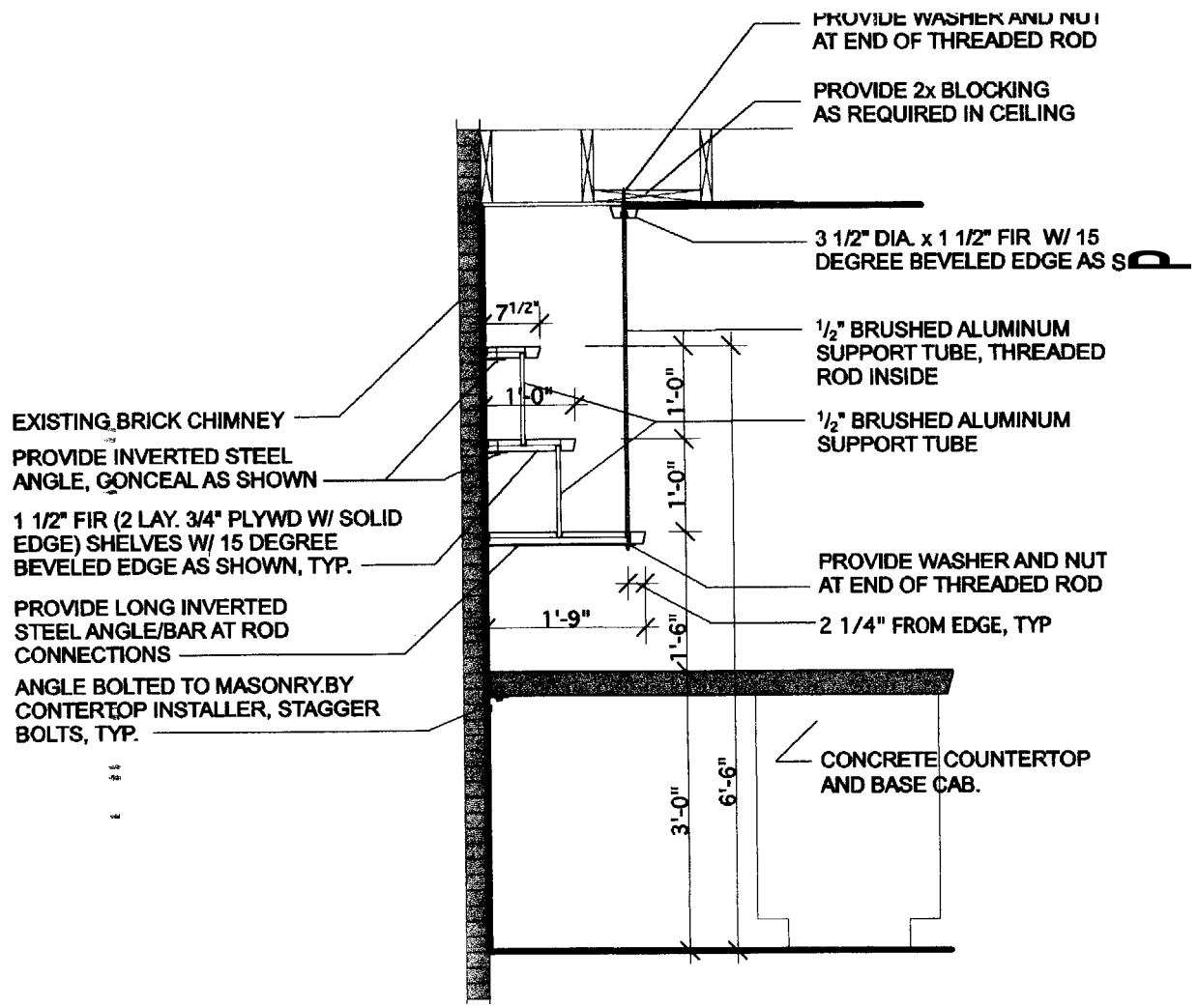

CHIMNEY / CONTERTOP SECTION

SCALE = 1/2" = 1'-0"

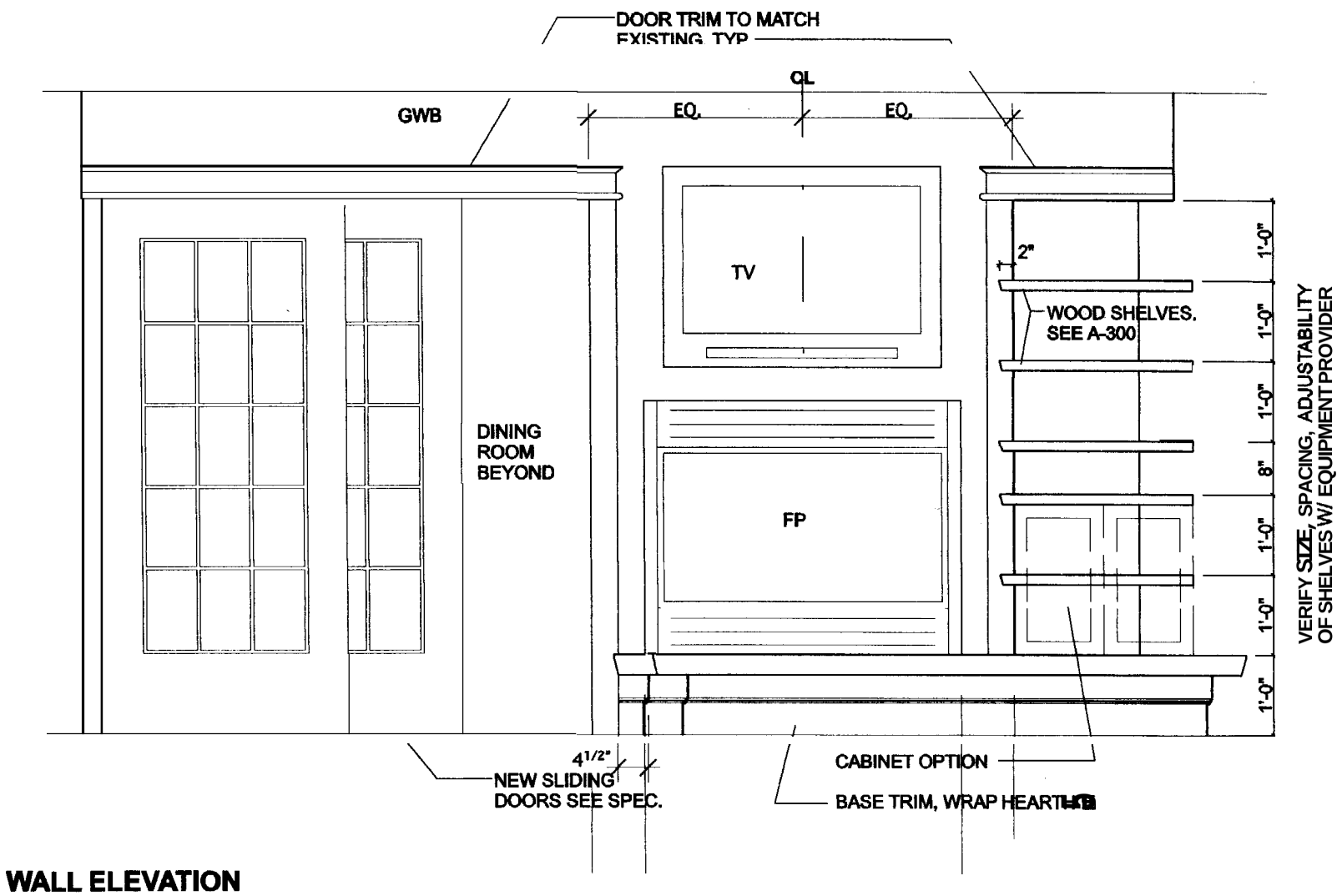

WALL ELEVATION

SCALE = 1/2" = 1'-0"

PHIL KAPLAN
ARCHITECT
424 FORE ST., PORTLAND, ME 04101
207-842-2888 FAX:842-2828

PROJECT:

MARTY LAYNE & PATTY BIRD
HOME REMODEL
37 ROSEMONT AVENUE
POM MAINE 04103

DRAWING: INTERIOR ELEVATIONS / DETAILS

SCALE: 1/2" = 1'-0"

0 1' 2' 4'

DATE: FRIDAY, JULY 8, 2005

A-200

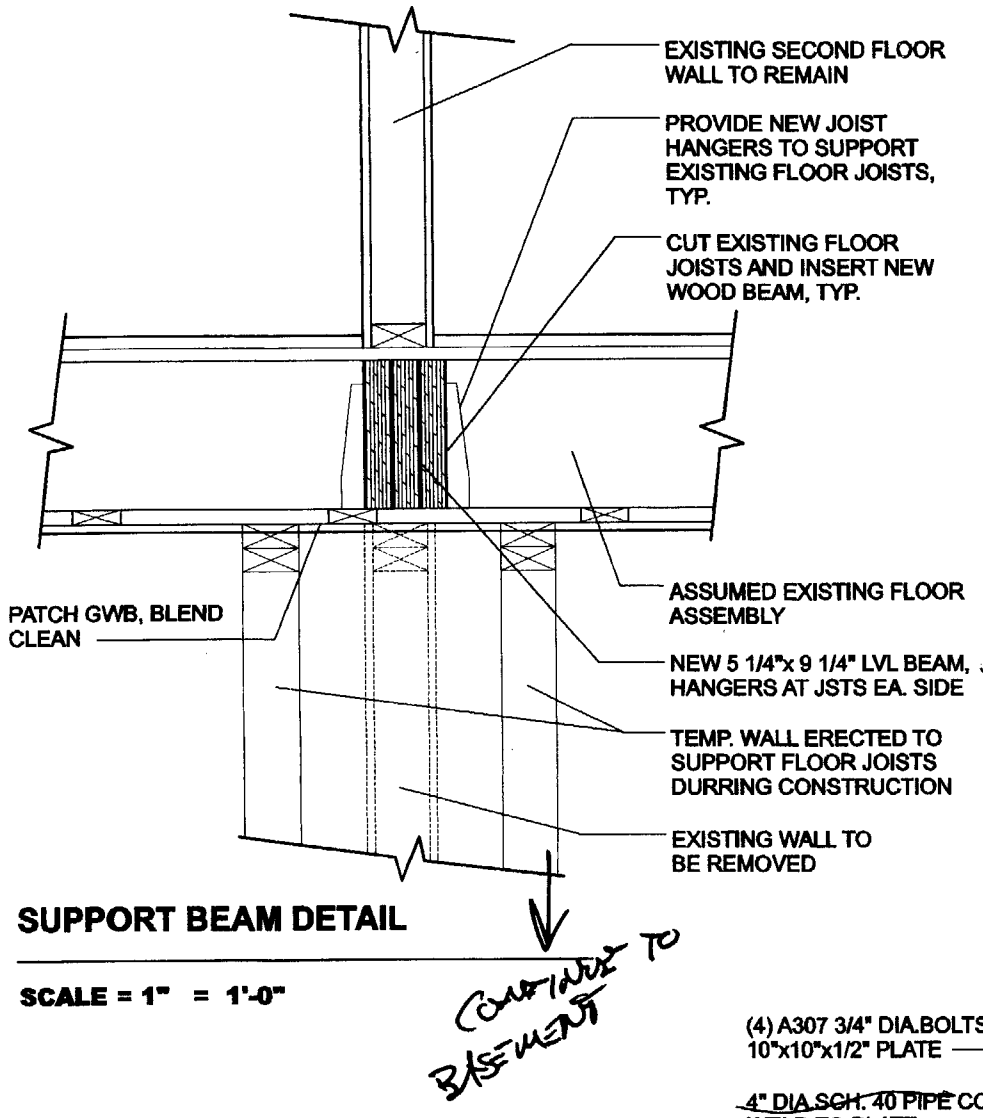

SUPPORT BEAM DETAIL

SCALE = 1" = 1'-0"

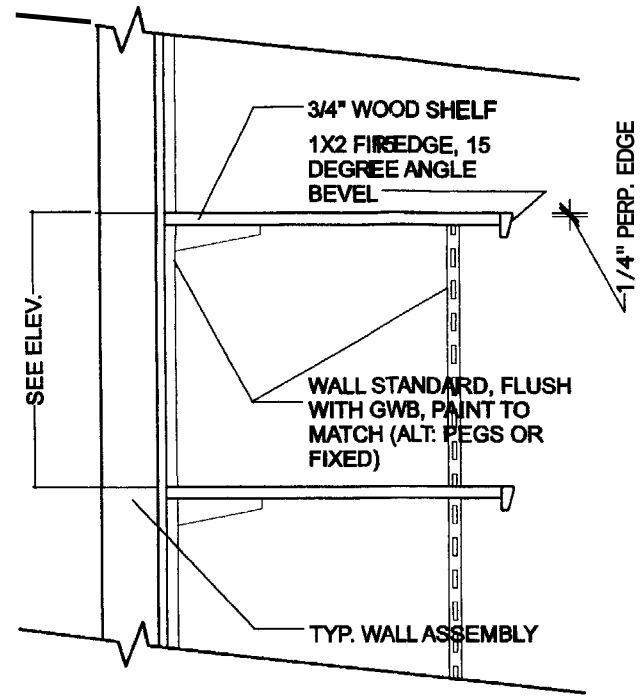

SHELVING DETAIL

SCALE 1/2" = 1'-0"

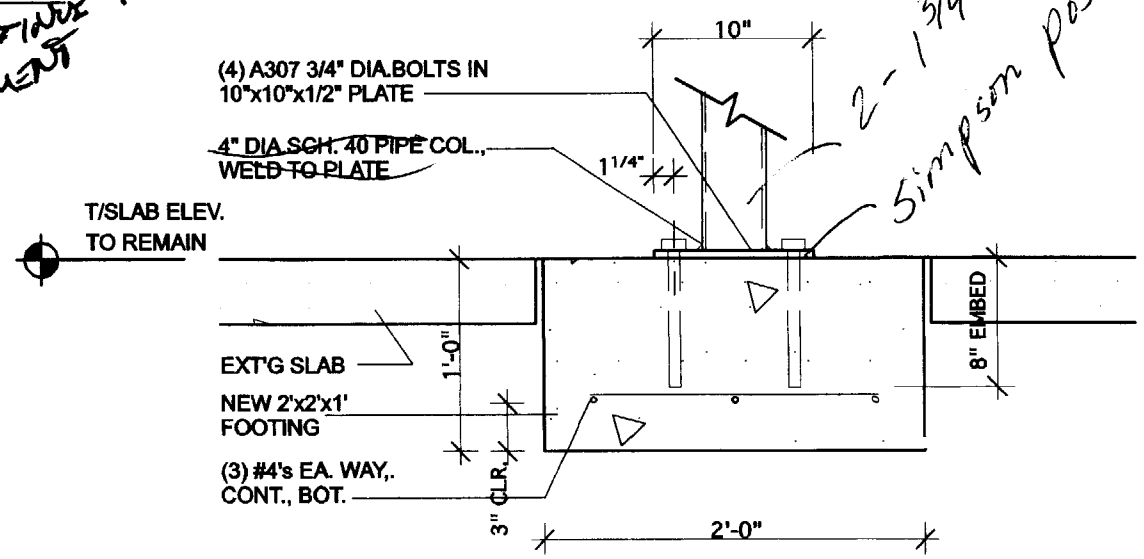

NEW FOOTING DETAIL

SCALE = 1" = 1'-0"

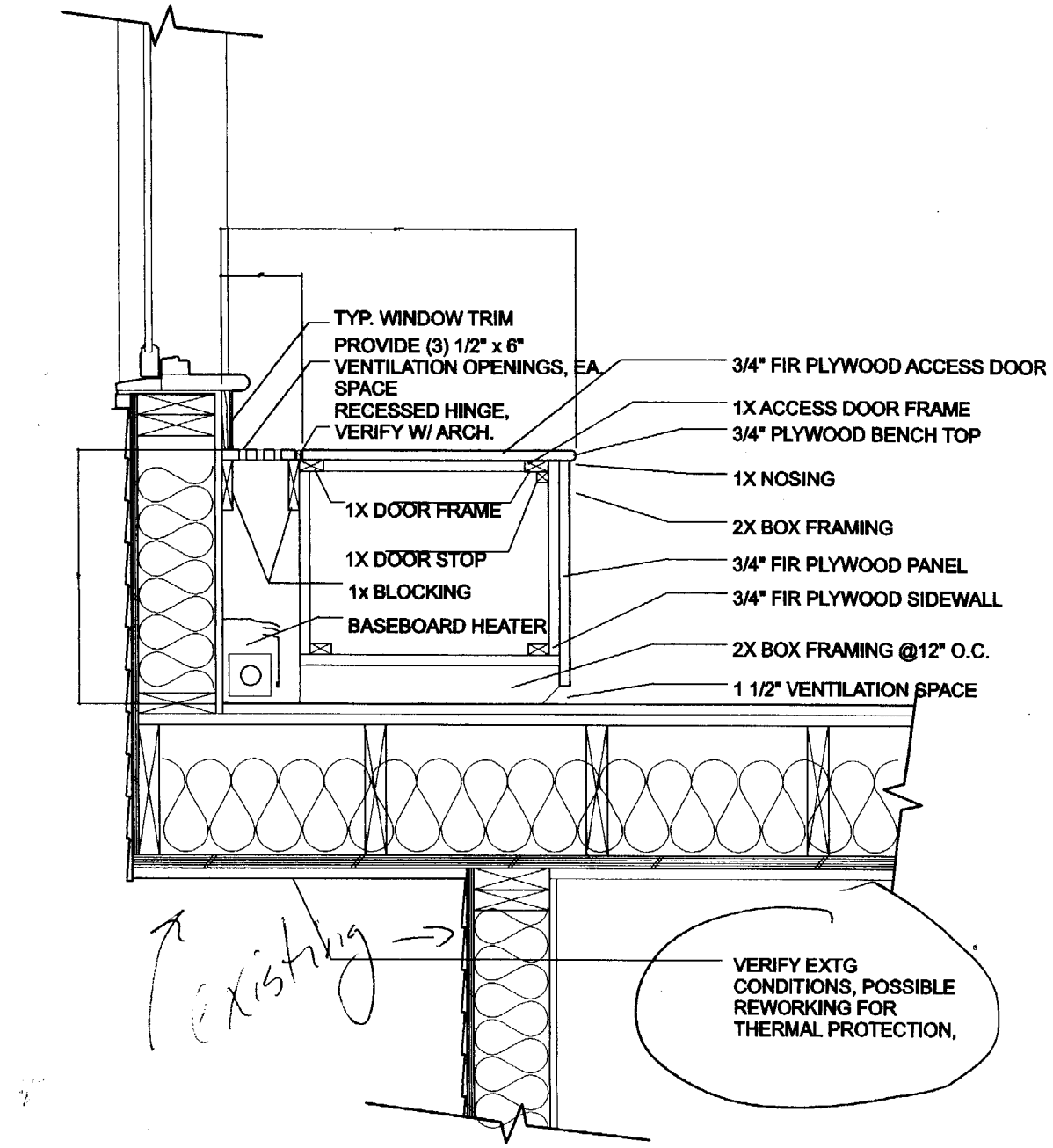

WINDOW SEAT DETAIL

SCALE = 1" = 1'-0"

PHIL KAPLAN
ARCHITECT
424 FORE ST., PORTLAND, ME 04101
207-842-2888 FAX:842-2828

PROJECT:

[illegible]
HOME REMODEL
37 ROSEMONT AVENUE
PORTLAND, MAINE 04103

DRAWING: DETAILS

SCALE: 1" = 1'-0"

0 6" 1' 2'

DATE: FRIDAY, JULY 8, 2005

A-300