Garages

Vinyl siding T1-11 Siding

24' x 24' Pleasant
8/12 Pitch
10/12 Pitch Attic Truss

24' x 36' Saddleback
8/12 Pitch
10/12 Pitch Attic Truss

28' x 28' Katahdin
8/12 Pitch
10/12 Pitch Attic Truss

26' x 40' Cadillac
8/12 Pitch
10/12 Pitch Attic Truss

28' x 36' Sugarloaf

Garage Package includes

light excavation & back fill poured slab with exisiting soil. Any fill needed is extra!
4" Floating slab with rebar and wire mesh, pitched at door for water run
Troweled floor finish.
2"x4"x8' wall framing 16" OC. P.T. bottom plates lagged to slab with sill seal
Wall sheathing is 7/16" osb with house wrap under vinyl siding or unfinished T1-11
Roof trusses are set 24" OC with 5/8' sheathing,
Non insulated 9'x7' high garage doors with no openers
Single hung Hancock Classic Windows
35 year Architectural Asphalt Shingles
Drip Edge on rakes and eaves
Ridge vent for ventilation

Garage Upgrades

Metal Roofing
Insulated garage door upgrade from non insulated
Garage door openers
Additional 9 lite Steel entry door
Additional Vinyl single hung window
2"x6" wall framing
10' Tall studs

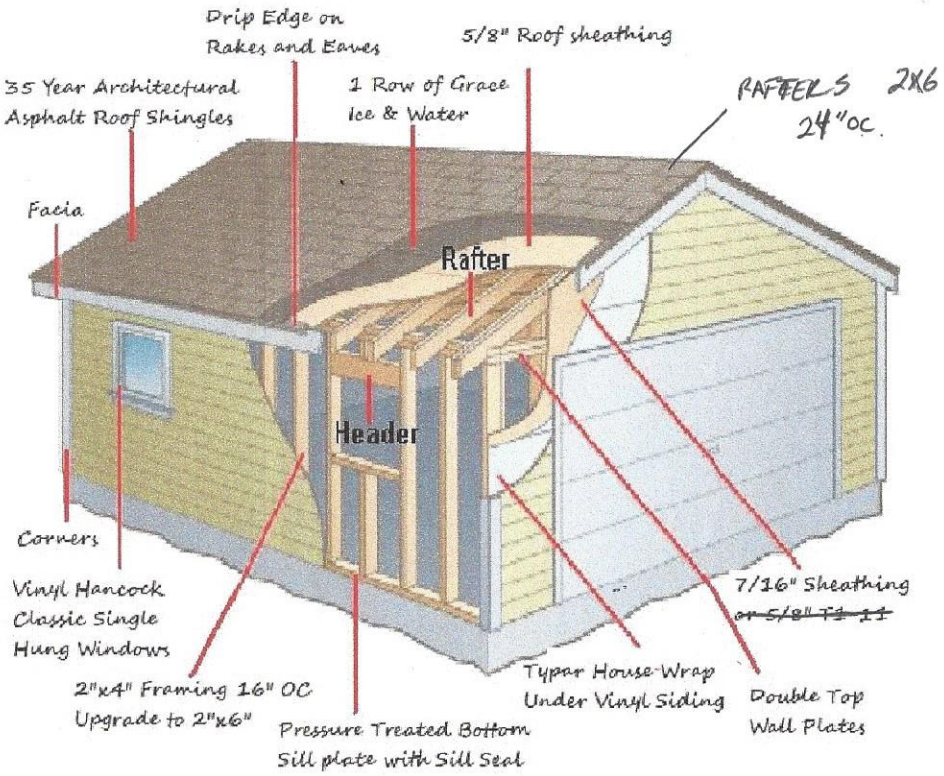

Floating Monolithic Concrete Slab

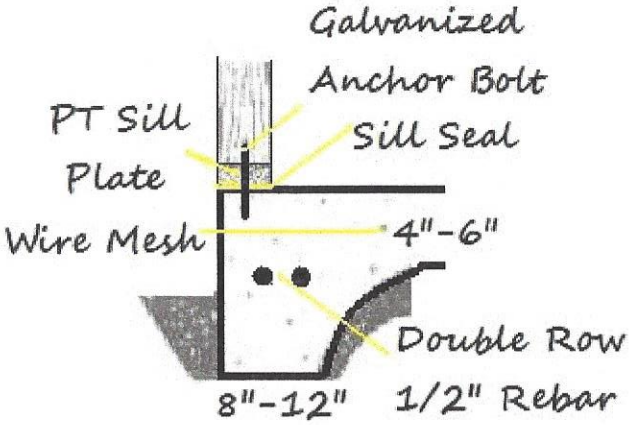

www.ShedHappens.Com