LAST SAVED BY: MATT.LAPIERRE 11/15/2017 11:16 AM

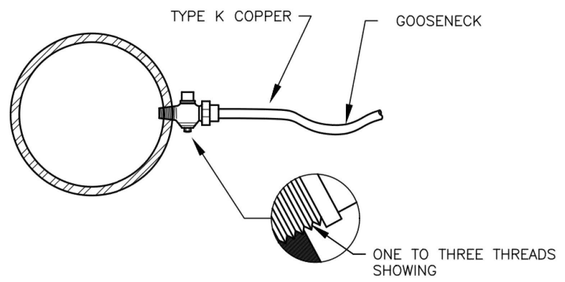

SERVICE TAP
(3/4" AND 1" C.C. THREAD)

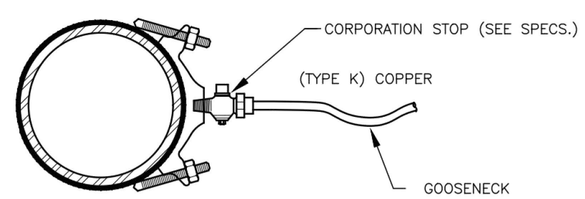

SERVICE SADDLE
(1-1/2" AND 2" C.C. THREAD)

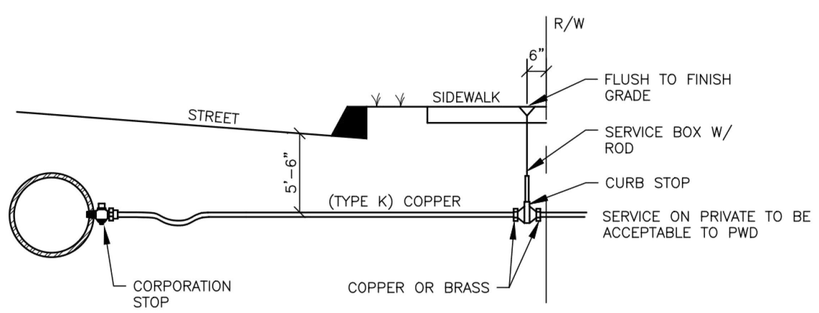

TYPICAL SERVICE CONNECTION

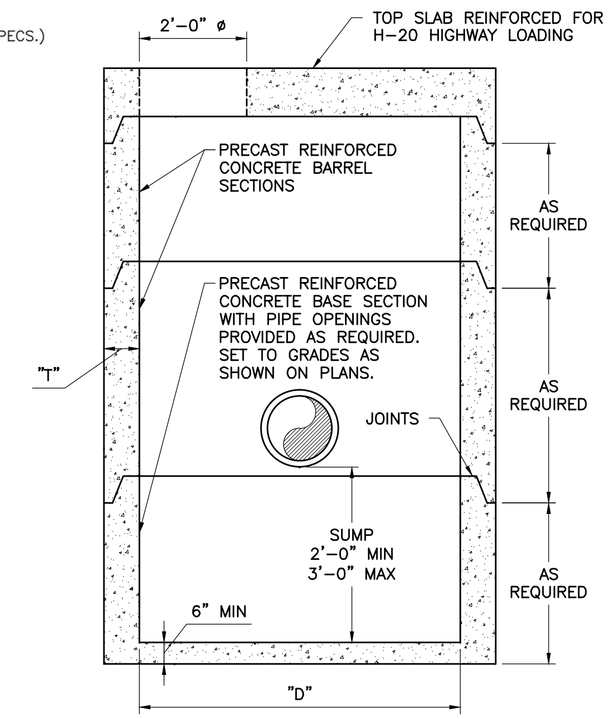

DIAMETER ("D")	MAX PIPE DIAMETER STRAIGHT THRU TO 45° DEFLECTION	MINIMUM WALL THICKNESS ("T")
48"	UP TO 30" O.D.	5"
60"	UP TO 44" O.D.	6"
72"	UP TO 51" O.D.	7"
96"	UP TO 72" O.D.	9"

FLAT SLAB TOP CATCH BASIN
SCALE: "NTS"

1000 Gallon 2 Comp. Grease Trap
Weight: 9,200 lbs.
Item # 8827

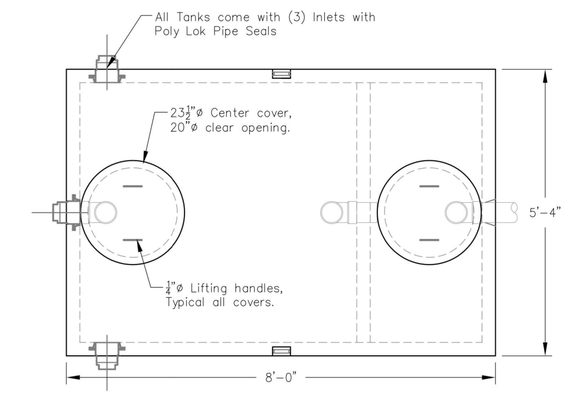

Plan View

General Notes:

Concrete Specifications:
1) 4000 psi @ 28 Days
2) 4%-6% Entrained Air
3) Tank Penetrations are integrally cast
4) All joints sealed with butyl rubber joint sealant

Grease Trap Information:
1) Tanks Should be pumped as needed
2) Access covers should have risers to bring cover access to grade.
3) Tanks can be vacuum tested at an additional cost

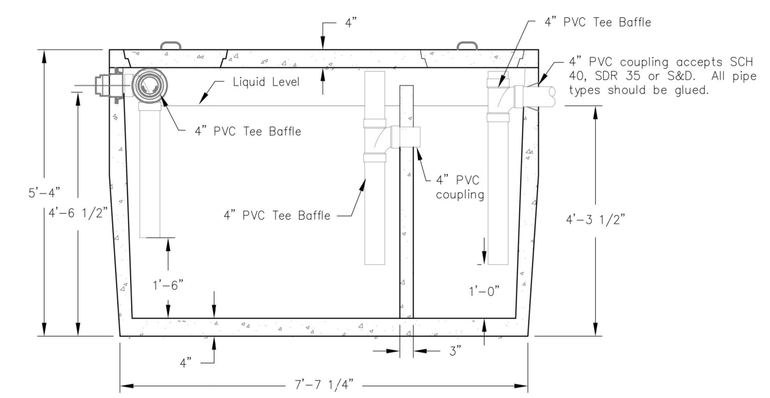

Section View

GREASE TRAP DETAIL
SCALE: NTS

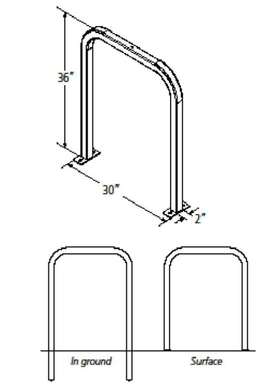

Product Dero Downtown Rack
As manufactured by Dero Bike Racks

Capacity 2 Bikes

Materials 2" x 2" x 3/16" tube

Finishes An after fabrication hot dipped galvanized finish is standard. 250 TGIC powder coat colors, a thermoplastic coating and a stainless steel option are also available.

Our powder coat finish assures a high level of adhesion and durability by following these steps:
1. Sandblast
2. Iron phosphate pretreatment
3. Epoxy primer electrostatically applied
4. Final thick TGIC polyester powder coat

Stainless Steel: 304 grade stainless steel material finished in either a high polished shine or a satin finish.

A rubbery PVC Dip is also available

Installation Methods **In ground mount** is embedded into concrete base. Specify in ground mount for this option.
Foot Mount has two 2.5"x6"x.25" feet with two anchors per foot. Specify foot mount for this option.
Rail Mounted Downtown Racks are bolted to two parallel rails which can be left freestanding or anchored to the ground. Rails are heavy duty 3"x1.4"X3/16" thick galvanized mounting rails. Specify rail mount for this option.

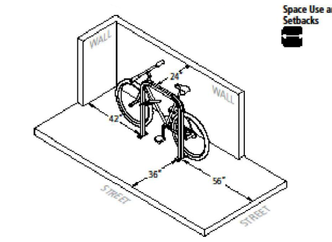

Space Use and Setbacks **Wall Setbacks:**
For racks set parallel to a wall:
Minimum: 24"
Recommended: 36"

For racks set perpendicular to a wall:
Minimum" 28"
Recommended: 42"

Distance Between Racks:
Mitimum: 24"
Recommended: 36"

Street Setbacks:
Minimum: 24"
Recommended: 36"

DERO BIKE RACK DETAIL
NOT TO SCALE

PRELIMINARY FOR REVIEW ONLY

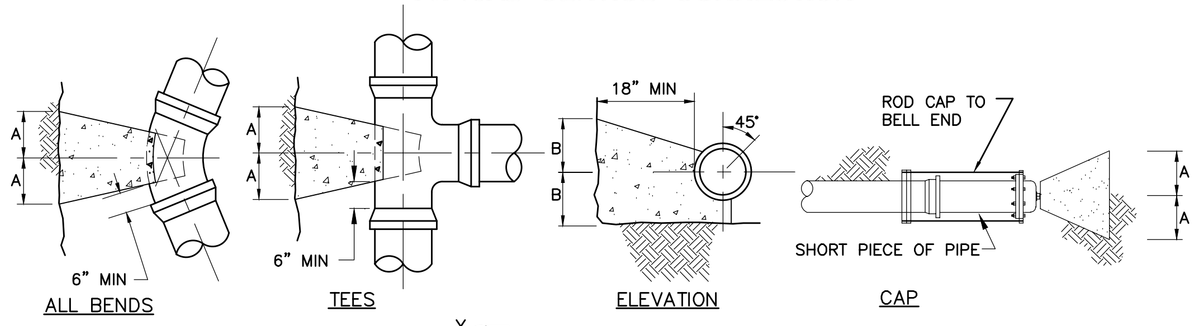

NOTES
1. THRUST BLOCK SIZES SHOWN ARE BASED ON A SOIL BEARING CAPACITY OF 2000 PSF AND TEST PRESSURES OF 180 PSI.
2. ALL BENDS, TEES, WYES, HYDS. & DEAD ENDS SHALL BE BRACED WITH CONCRETE THRUST BLOCKS.
3. RODDING MAY BE REQUIRED

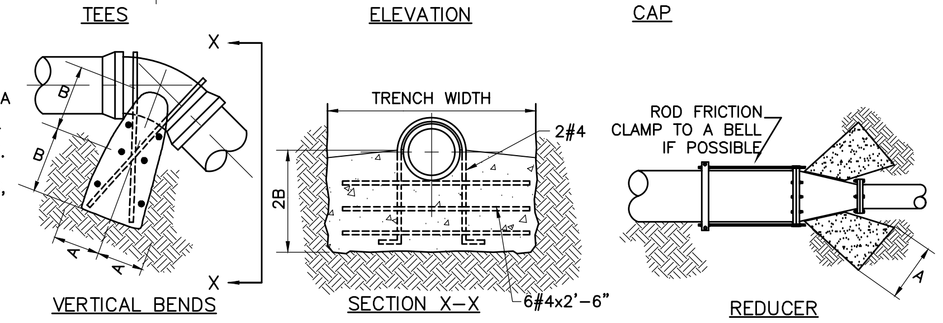

PIPE SIZE	90° BEND		45° BEND		22 1/2° BEND		11 1/4° BEND		TEE		VERTICAL BEND (DOWN)		PLUG		REDUCER	
	A	B	A	B	A	B	A	B	A	B	A	B	A	B	A	B
4"	15"	12"	12"	9"	9"	6"	6"	6"	12"	12"	24"	21"	12"	12"	12"	12"
6"	15"	12"	12"	9"	9"	6"	6"	6"	12"	12"	24"	21"	12"	12"	12"	12"
8"	20"	15"	14"	12"	9"	9"	9"	6"	18"	12"	33"	24"	14"	14"	18"	12"
10"	21"	21"	18"	15"	15"	9"	9"	9"	20"	18"	40"	27"	16"	16"	20"	18"
12"	27"	24"	23"	15"	15"	12"	12"	9"	25"	18"	48"	30"	18"	18"	25"	18"
16"	37"	30"	30"	21"	21"	15"	13"	12"	32"	24"	57"	36"	22"	22"	32"	24"

THRUST BLOCKS
NTS

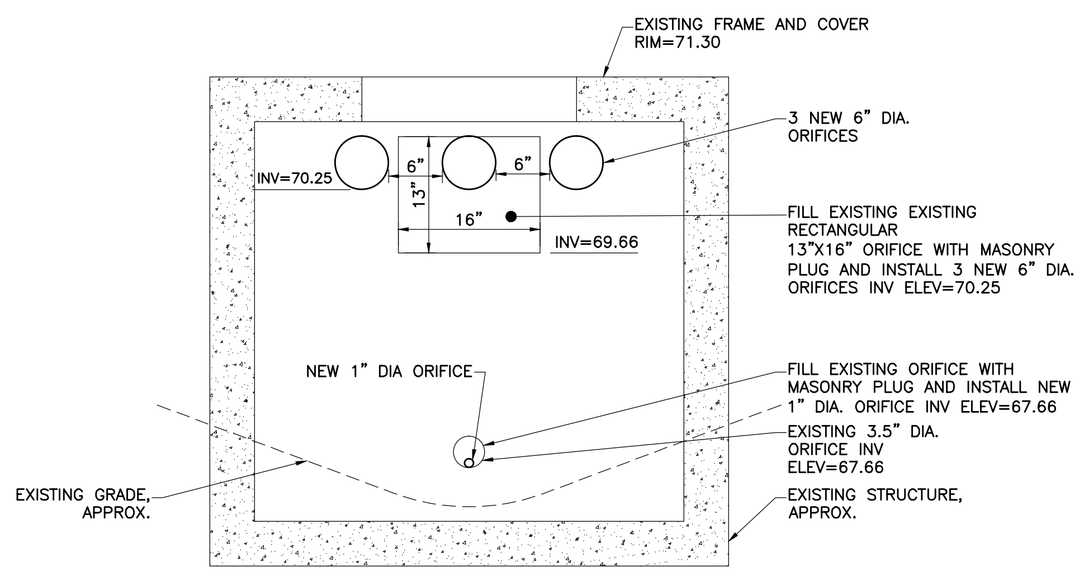

MODIFICATIONS TO EXISTING STRUCTURE "A" DETAIL
SCALE: "NTS"

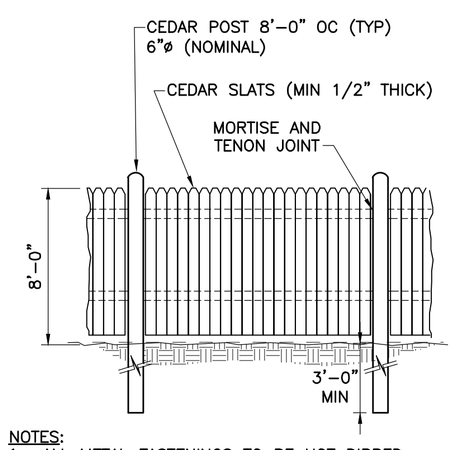

NOTES:
1. ALL METAL FASTENINGS TO BE HOT DIPPED GALVANIZED OR STAINLESS STEEL.
2. SUBMIT DETAILS FOR GATE FRAMING AND HARDWARE FOR ENGINEER'S APPROVAL PRIOR TO FABRICATION.
3. CONTRACTOR TO APPLY SEMI-TRANSPARENT PRESERVATIVE STAIN, COLOR TO BE COORDINATED WITH OWNER.

STOCKADE FENCE
SCALE: NTS

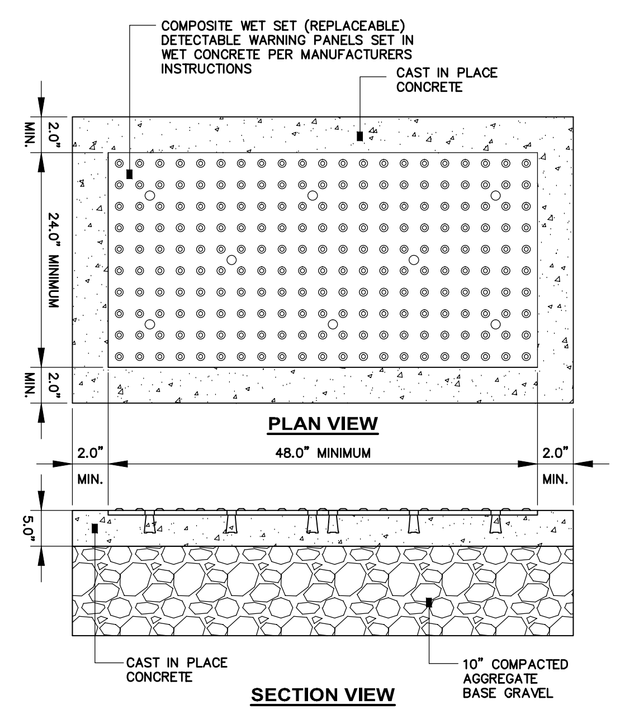

NOTES:
1. COMPOSITE WET SET (REPLACEABLE) DETECTABLE WARNING PANELS SHALL BE AS MANUFACTURED BY ADA SOLUTIONS, INC. (WWW.ADATILE.COM), OR APPROVED EQUAL.
2. CAST IN PLACE CONCRETE SHALL MEET SPECIFICATIONS FOR MAINE D.O.T. CLASS A STRUCTURAL CONCRETE, MINIMUM COMPRESSIVE STRENGTH 4,000 PSI. THE CONCRETE SHALL BE SEALED PRIOR TO SETTING PANELS. THE EXPOSED CONCRETE BORDER SHALL RECEIVE A GROOVED EDGE BETWEEN THE PANEL AND CONCRETE, ALONG WITH A UNIFORM BROOM FINISH PERPENDICULAR TO THE FLOW OF PEDESTRIAN TRAFFIC.
3. TRUNCATED DOMES SHALL BE ALIGNED IN ROWS, PARALLEL AND PERPENDICULAR TO THE PREDOMINANT DIRECTION OF TRAVEL. TRUNCATED DOME BRICKS AND GRANITE PAVERS ARE NOT ALLOWED.
4. FOR ALL DETECTABLE WARNING PANELS (EXCEPT AS SPECIFIED IN FIGURE 1-7A AND TECHNICAL MANUAL SECTION 1.8.4.), FEDERAL YELLOW COLORED (#33538) PANELS SHALL BE USED. FOLLOW MANUFACTURER'S INSTRUCTIONS FOR INSTALLATION.
5. SIZE: THE DETECTABLE WARNING PANEL(S) SHALL EXTEND 24 INCHES MINIMUM IN THE DIRECTION OF TRAVEL AND THE FULL WIDTH OF THE CURB RAMP, LANDING, OR BLENDED TRANSITION TO THE STREET.
6. ORIENTATION: THE DETECTABLE WARNING PANEL SHALL BE LOCATED SO THAT THE EDGE NEAREST THE CURB LINE IS 2 INCHES MINIMUM AND 4 INCHES MAXIMUM FROM THE BACK OF THE CURB LINE. THE PANEL SHALL BE ORIENTED TO THE DIRECTION OF TRAVEL AS IDENTIFIED BY THE POINT OF EGRESS.

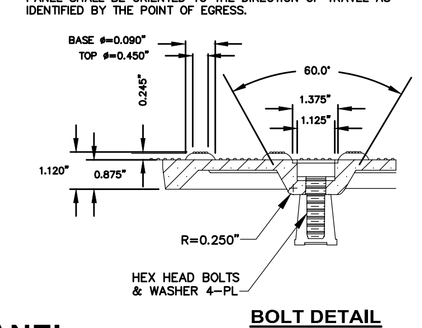

BOLT DETAIL

CURB CUT DETAIL
NOT TO SCALE

SIDEWALK RAMP DETECTABLE WARNING PANEL
NOT TO SCALE

NO	SUBMISSIONS/REVISIONS	APP'D	DATE
	ISSUED FOR PORTLAND SITE PLAN REVIEW	JBW	11/17
1			
2			
3			
4			

DESIGNED BY: MAG
CAD BY: MRL
CAD-REVIEW BY: MRL
CHECKED BY: MAG
DATE: 11-15-17
APPROVED BY: JBW
DATE: 11-15-17
PROJECT NO: 13682A

STATE OF MAINE
JAN B.S. WIEGMAN
No. 5852
LICENSED
PROFESSIONAL ENGINEER
11-15-17

WRIGHT-PIERCE
Engineering a Better Environment
Offices Throughout New England
888.621.8156 | www.wright-pierce.com

THE CEDARS
ASSISTED LIVING AND
LONG-TERM CARE FACILITY
PORTLAND, ME

DETAILS IV

DRAWING
C-10

G:\DWGS\ME\PORTLAND\13682A-CEDARSNURSINGFACILITY\CIV\13682AC10.DWG | 13682aC10 | 1:4.56 | ---- | 11/22/2017 10:08:05 AM | MATT.LAPIERRE