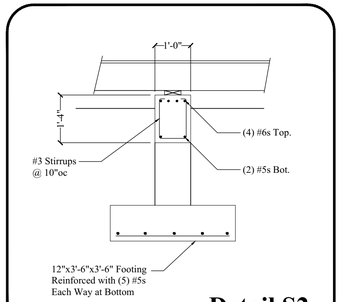

Detail S2
Scale: 1/2" = 1'-0"

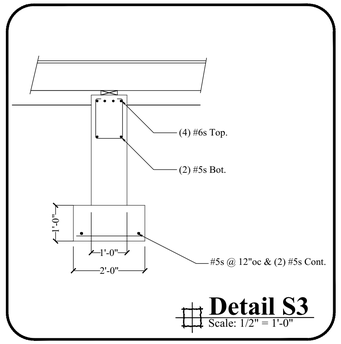

Detail S3
Scale: 1/2" = 1'-0"

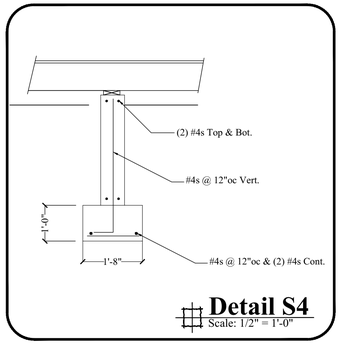

Detail S4
Scale: 1/2" = 1'-0"

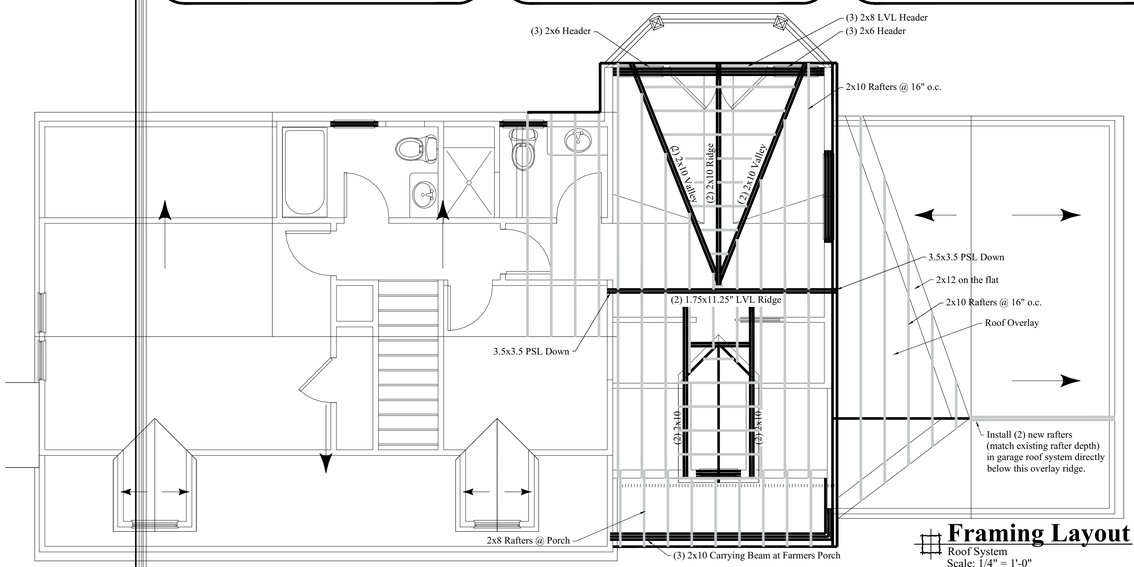

Framing Layout
Roof System
Scale: 1/4" = 1'-0"

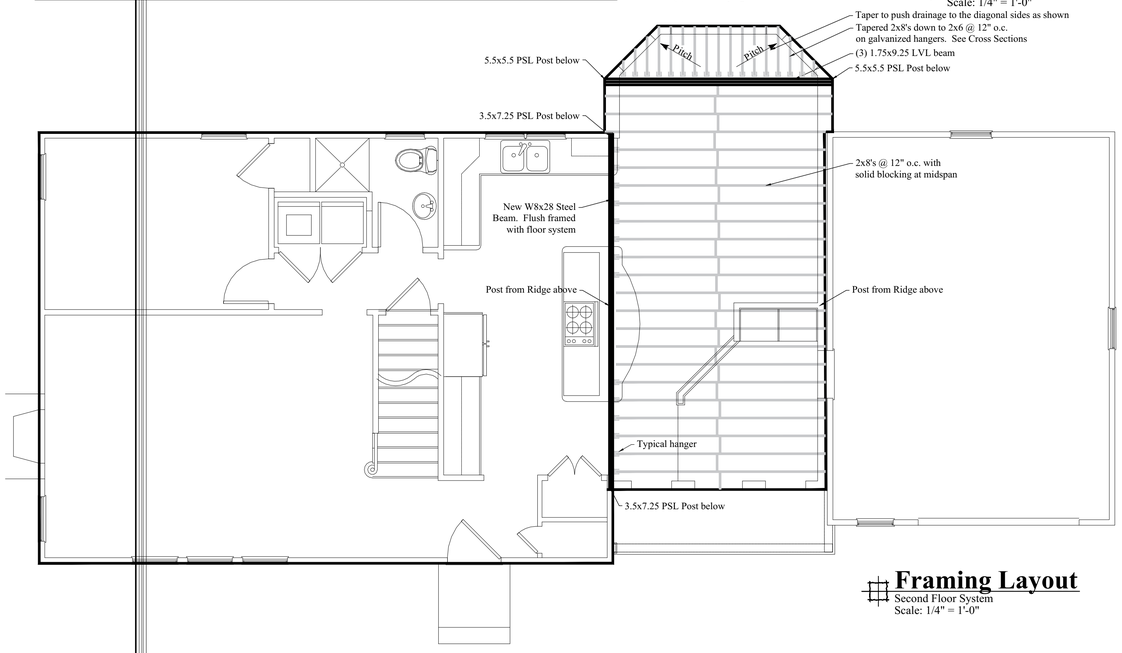

Framing Layout
Second Floor System
Scale: 1/4" = 1'-0"

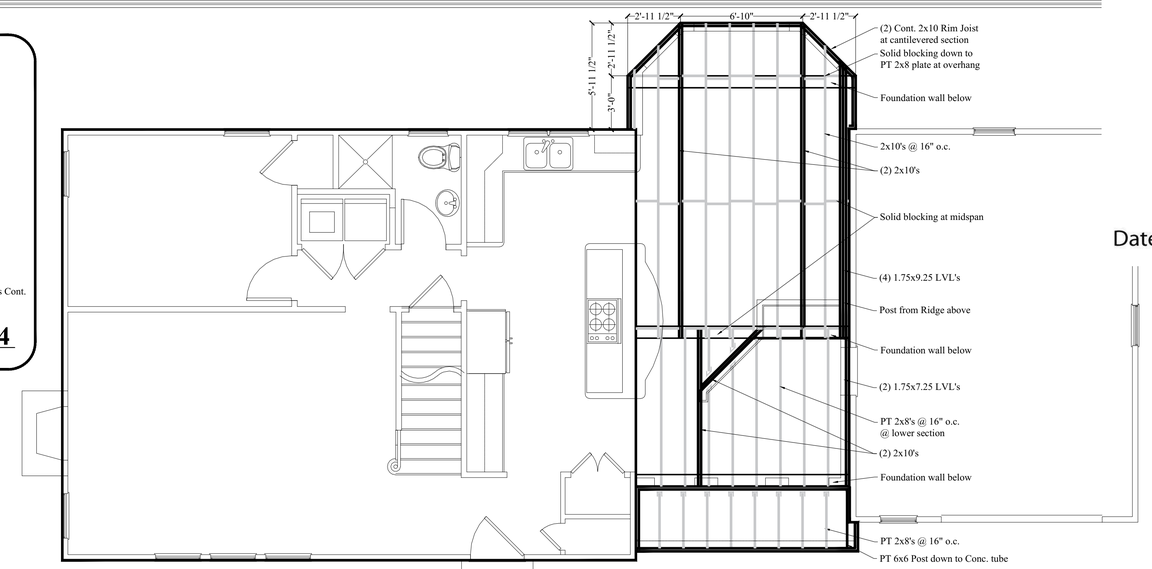

Framing Layout
First Floor System
Scale: 1/4" = 1'-0"

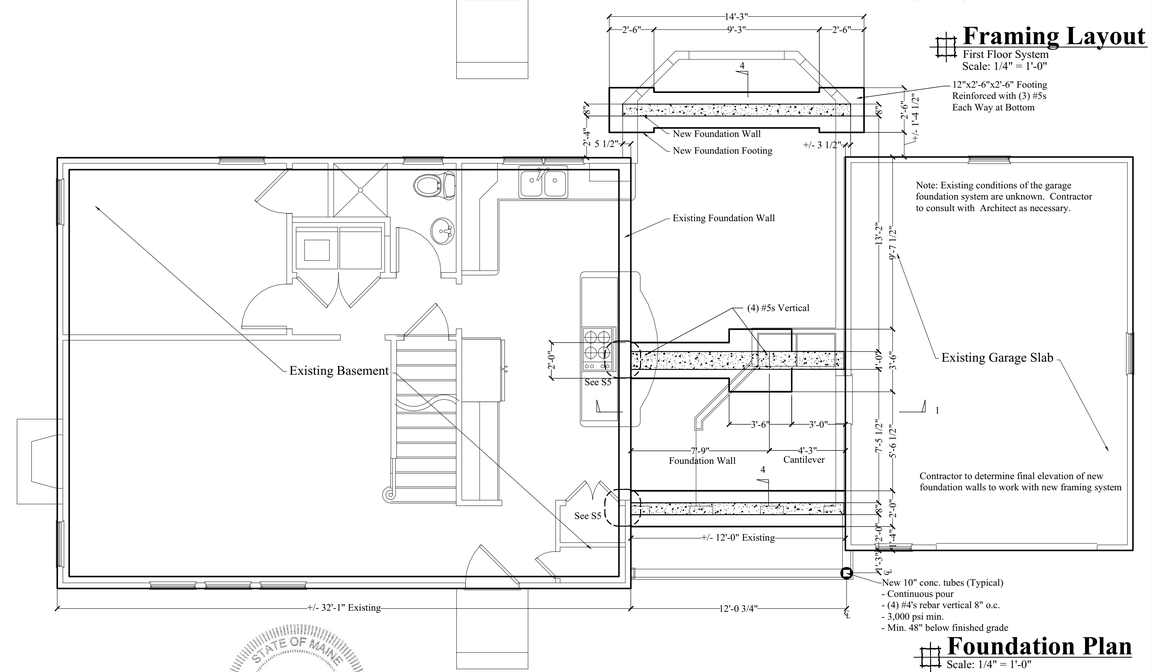

Foundation Plan
Scale: 1/4" = 1'-0"

STATE OF MAINE
TIMOTHY G. SHELLEY
No. 5952
LICENSED
PROFESSIONAL ENGINEER

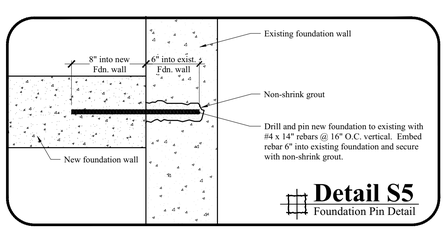

Detail S5
Foundation Pin Detail

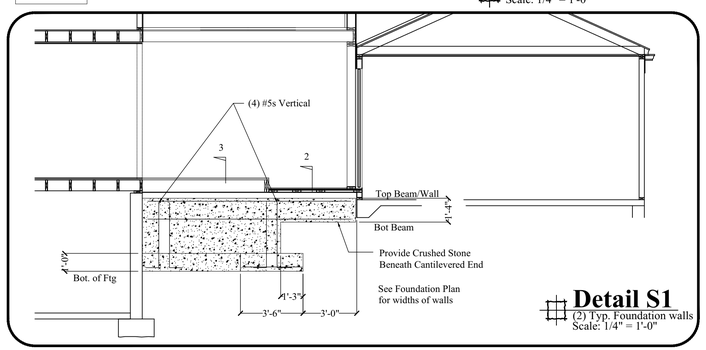

Detail S1
(2) Typ. Foundation walls
Scale: 1/4" = 1'-0"

RESURGAM CITY OF PORTLAND, MAINE

Inspections Division
Date: 05/17/17

NO.	DATE	DESCRIPTION

REVISIONS

CUSTOM CONCEPTS, INC.
ARCHITECTURE
383 U.S. ROUTE 1, SUITE 1a - SCARBOROUGH, MAINE 04074
Phone: (207) 883-0083 WWW.CUSTOMCONCEPTSINC.COM

☑ Contract Documents — FOR PERMITS, BIDS, AND CONSTRUCTION
☐ Design Development — CLIENT REVIEW AND COST ESTIMATING
☐ Preliminary Design — CLIENT REVIEW ONLY - NOT CONSTRUCTION

PROJECT: Addition & Renovations to the Klein Residence
DRAWING TITLE: Preliminary Plans
OWNER APPROVAL:
JOB NUMBER: 9277-16
DRAWN BY: MER
SCALE: As noted

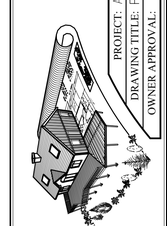

DATE: Feb 27, 2017

A4