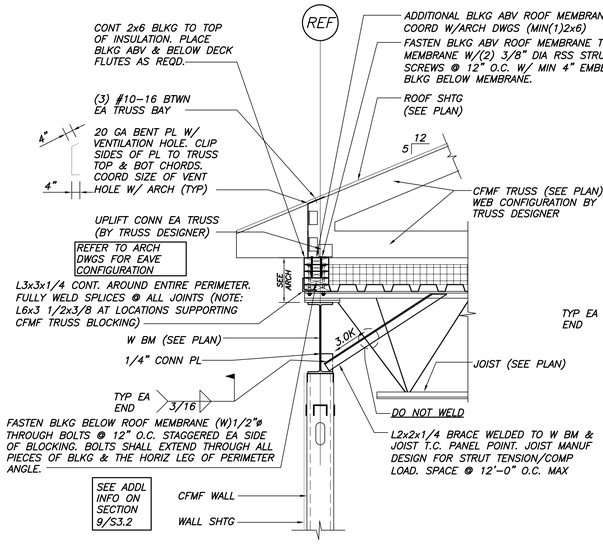

SECTION
3/4"=1'-0"
1 S1.3

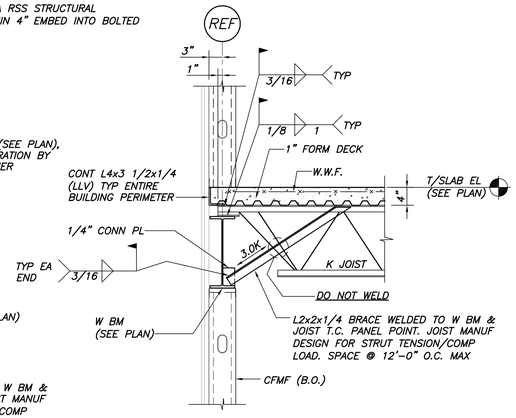

SECTION
3/4"=1'-0"
2 S1.2

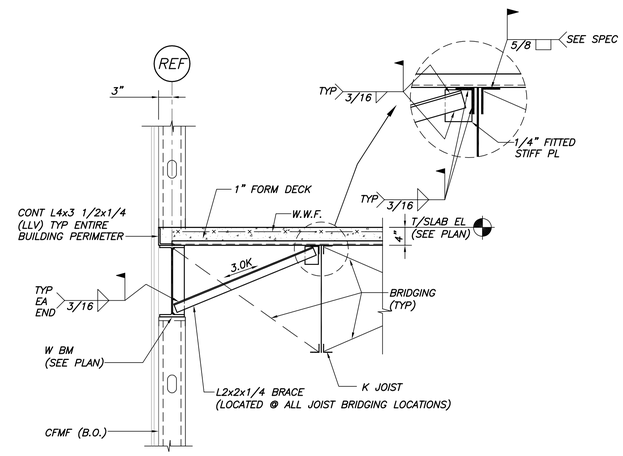

SECTION
3/4"=1'-0"
3 S1.2

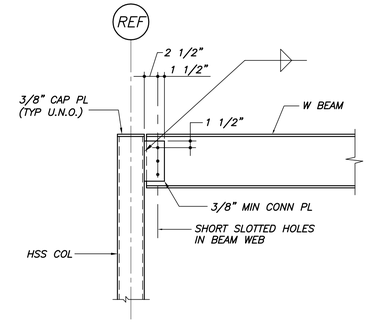

TYP BEAM TO HSS COL CONN U.N.O.
N.T.S.

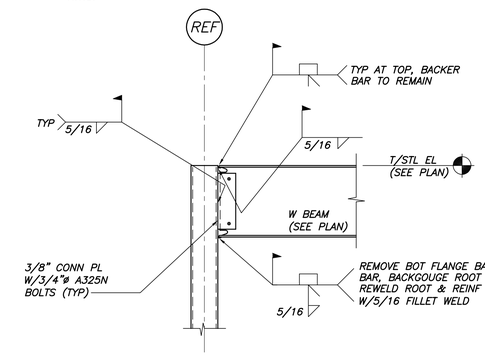

TYP MOMENT CONN DETAIL U.N.O.
N.T.S.

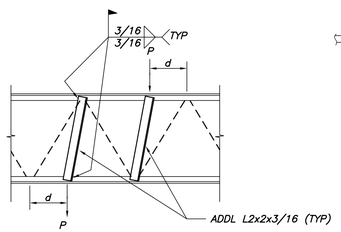

TYP JOIST REINF DETAIL
N.T.S.

1. FOR CONCENTRATED LOADS LOCATED A DISTANCE "d", 4" OR MORE FROM PANEL POINT, PROVIDE ADDITIONAL WEB MEMBERS AS SHOWN.
2. P = 150# MAX LOAD.

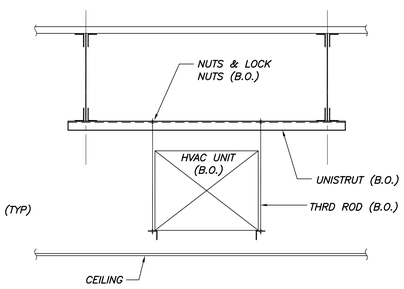

TYP SUPPORT DETAIL @ HANGING EQUIP
N.T.S.

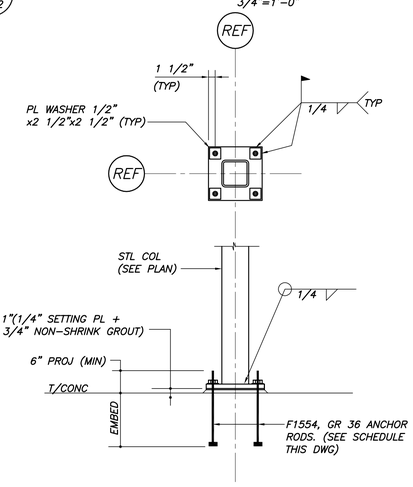

TYP COL BASE DETAIL U.N.O.
N.T.S.

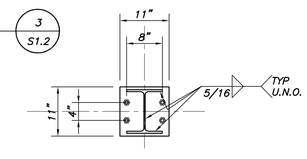

PL 1x11x0'-11"
W/(4)-1 5/16"ø HOLES FOR
(4)-3/4"ø GR 36 ANCHOR RODS
W/9" EMBED & 5" PROJ

BP-E

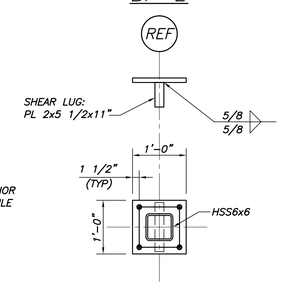

PL 2x12x1'-0"
W/(4)-1 13/16"ø HOLES FOR
(4)-1"ø GR 36 ANCHOR RODS
W/12" EMBED & 6" PROJ

AT GRID 10/D, SHEAR LUG IN BOTH DIRECTIONS. PROVIDE CROSS SHAPE LUG.

BP-D

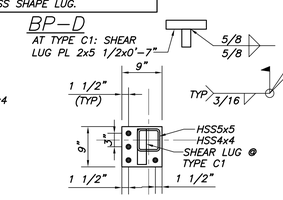

PL 2x9x0'-9"
W/(4)-1 13/16"ø HOLES FOR
(4)-1"ø GR 36 ANCHOR RODS
W/12" EMBED & 6" PROJ

BP-C1

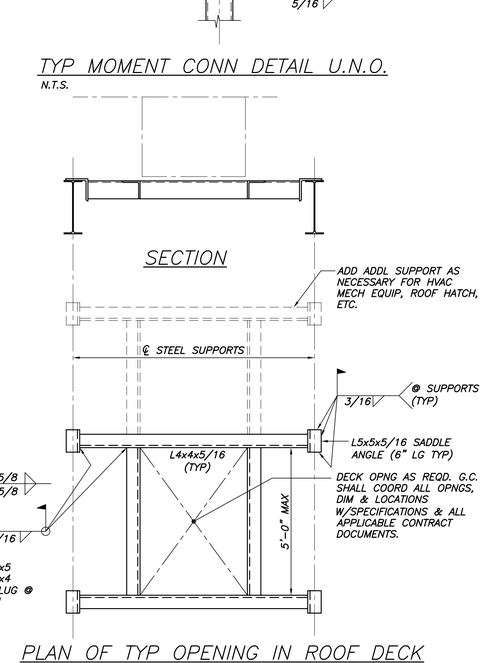

PLAN OF TYP OPENING IN ROOF DECK
N.T.S.
TYPICAL @ FANS & OTHER MECH & HVAC EQUIP U.N.O.

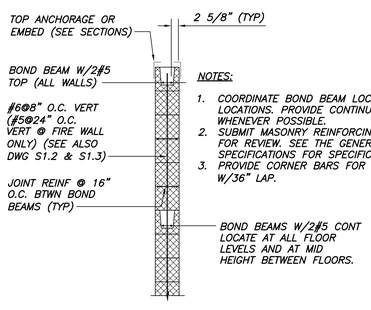

NOTES:

1. COORDINATE BOND BEAM LOCATIONS WITH DOOR LOCATIONS. PROVIDE CONTINUOUS BOND BEAMS WHENEVER POSSIBLE.
2. SUBMIT MASONRY REINFORCING SHOP DRAWINGS FOR REVIEW. SEE THE GENERAL NOTES & SPECIFICATIONS FOR SPECIFIC REQUIREMENTS.
3. PROVIDE CORNER BARS FOR BOND BEAM REINF W/36" LAP.

CMU WALL SECTION
N.T.S.

TYP NOTES AT CMU WALLS
N.T.S.

NOTES:

1. PROVIDE LADUR TIE HORIZ REINF @16" O.C., U.N.O.
2. PROVIDE BOND BEAMS W/2#5 CONT AT ALL FLOOR LEVELS AND MID HEIGHT BETWEEN FLOORS.
3. ALL REINFORCED CELLS ARE TO BE FULLY GROUTED.
4. LAP BARS AT SPLICES MIN. 48 BAR DIAMETERS.
5. PROVIDE 2#5 MIN ABOVE & BELOW ALL OPENINGS. EXTEND 24" MIN BEYOND EDGE OF OPENING EA SIDE.
6. ALL CMU WALL REINF. SHALL BE REVIEWED BY THE STRUCTURAL ENGINEER OR THEIR DESIGNATED REPRESENTATIVE PRIOR TO GROUTING.

CMU LINTEL SCHEDULE

MARK	CLEAR SPAN	WIDTH	DEPTH	REINF
L1	< 6'-0"	8"	8"	2#5 CONT
L2	6'-0" - 8'-0"	8"	16"	2#5 CONT

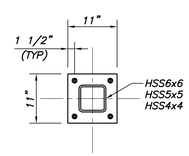

PL 1x11x0'-11"
W/(4)-1 5/16"ø HOLES FOR
(4)-3/4"ø GR 36 ANCHOR RODS
W/9" EMBED & 5" PROJ

BP-A

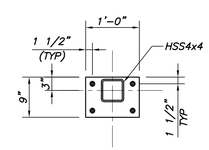

PL 3/4x9x1'-0"
W/(4)-1 5/16"ø HOLES FOR
(4)-3/4"ø GR 36 ANCHOR RODS
W/9" EMBED & 5" PROJ

BP-B

BASE PLATE DETAILS
3/4"=1'-0"

COPYRIGHT 2012
REUSE OR REPRODUCTION OF THE CONTENTS OF THIS DOCUMENT IS NOT PERMITTED WITHOUT WRITTEN PERMISSION OF FORESIDE ARCHITECTS

GENERAL NOTES:

BECKER STRUCTURAL ENGINEERS
75 York Street, Portland, Maine 04101
207.879.1838 ▪ beckerstructural.com

REVISIONS:

FORESIDE ARCHITECTS LLC
5 FUNDY ROAD
FALMOUTH, ME 04105
Phone: 207-781-3344
Fax: 207-699-5564
Online @ foresidearchitects.com

Project Status:
BID SET

Project Number:
SR0712
BSE WO# 2908

STATE OF MAINE JAMES C. FORSTER No. 5635 LICENSED PROFESSIONAL ENGINEER

Seaside Rehabilitation
and Health Care Center
850 Baxter Blvd
Portland, ME

Drawing Name:
Framing Sections & Details

Scale:
NOTED

Date:
10/29/2012

SHEET
S3.1