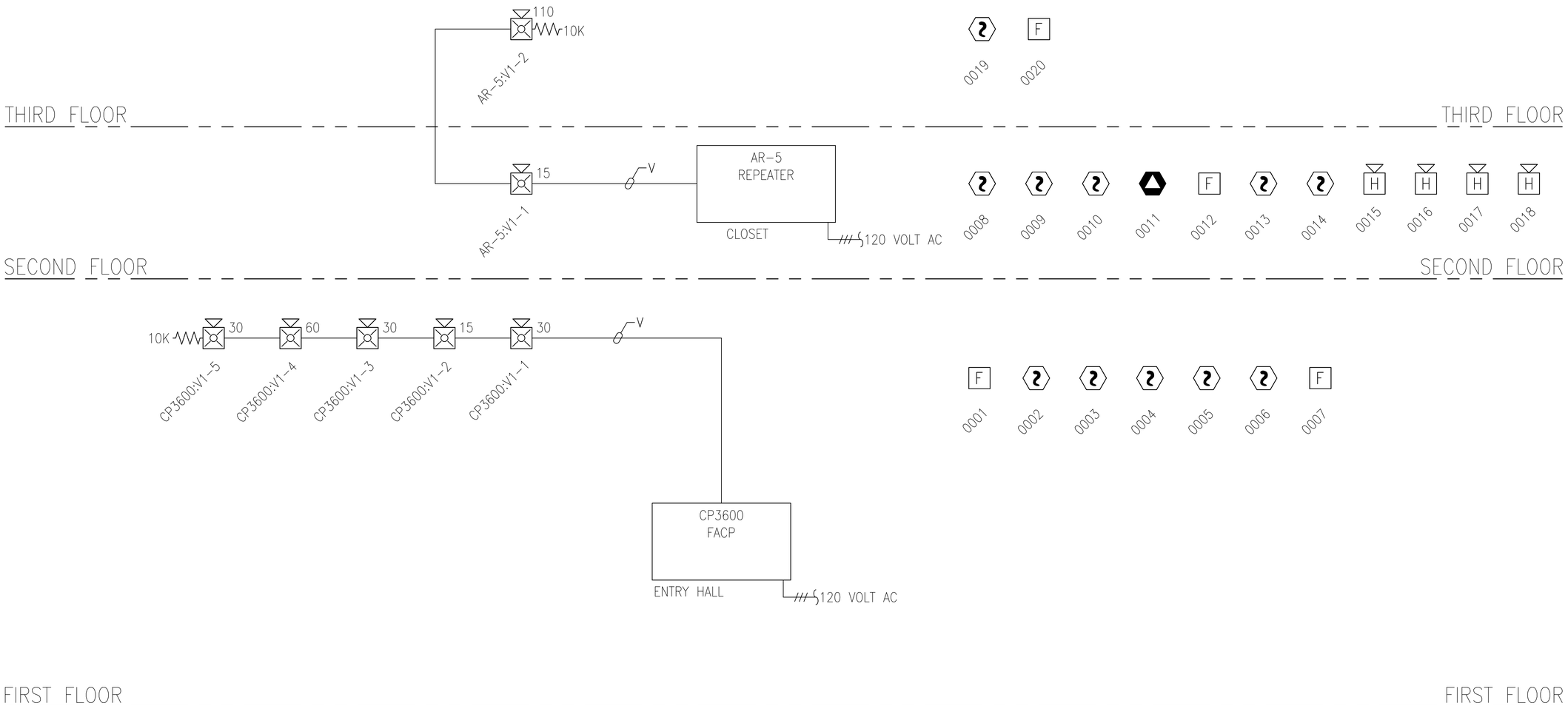

tyco SimplexGrinnell

Safer. Smarter. Tyco.™

DISTRICT - 147
30 THOMAS DRIVE
WESTBROOK, ME 04092
SERVICE: 207-842-6440
PHONE: 207-842-6440
FAX: 207-842-6439

CWSI-735 WASHINGTON AVENUE

WASHINGTON AVENUE APARTMENTS
375 WASHINGTON AVENUE
SOUTH PORTLAND, ME 05104

Revisions shown with △ symbol

ISSUE LOG:				
MARK	DATE	CAD	CHK	DESCRIPTION

DRAWN BY:	DZONA
CHECKED BY:	SKALAFARSKI
ISSUE DATE:	1/12/17
JOB #:	
PROJECT #:	147:147426986
SIMPLEXGRINNELL ©	2017

SYSTEM:
FIRE ALARM SYSTEM

SHEET:
RISER DIAGRAM

FA-201

IMPORTANT NOTICE TO USER: By accepting or using this drawing and/or the information contained herein, the user agrees to the following terms and conditions: The electronic information in the drawing may be subject to intentional or unintentional alteration. Any use, reuse, copying, modification or alteration of the information contained herein shall be at the sole risk of the user. This information may not be sold or transferred to any third party, used or other projects or additions to the project for which it was prepared, or used for completion of this project by any third party. SimplexGrinnell disclaims all liability for the use or reuse of altered files by the user or any third party and such use will be a user's sole risk. User shall, to the fullest extent permitted by law, defend, indemnify, and hold SimplexGrinnell harmless from any and all claims for loss, damage or injury arising directly or indirectly therefrom.

FILE PATH: P:\2017\147\CWSI-735 Washington Ave\CAD\FA-201.dwg
LAST SAVED BY: DZONA
LAST PRINTED: 1/13/2017 1:53:52 PM
30" x 42" - Arch E1 Size