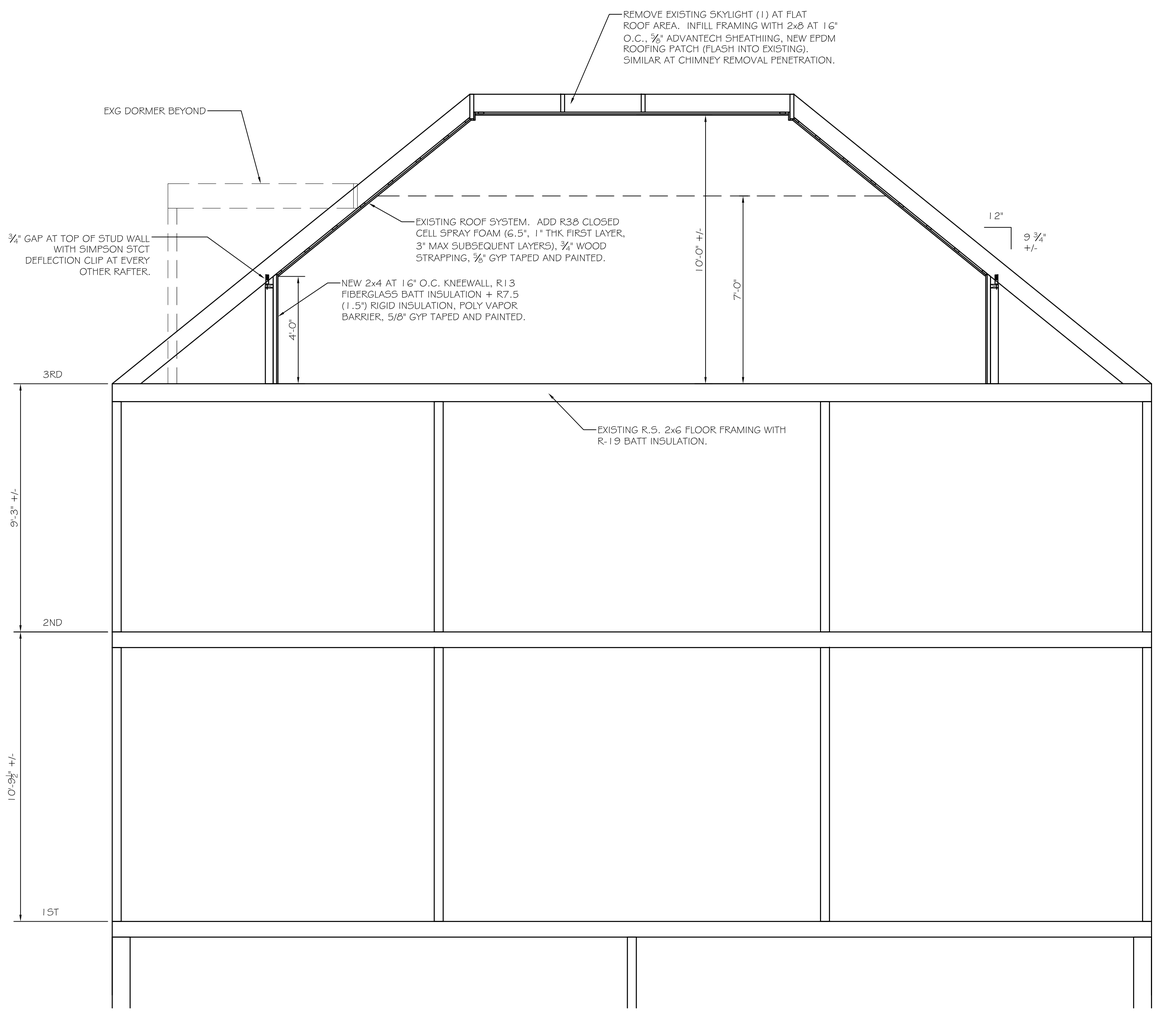

A3 BUILDING SECTION
SCALE: 3/8"= 1'-0"

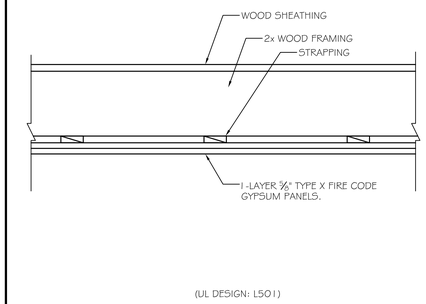

C1 1 HR RATED CEILING ASSEMBLY
SCALE: NTS

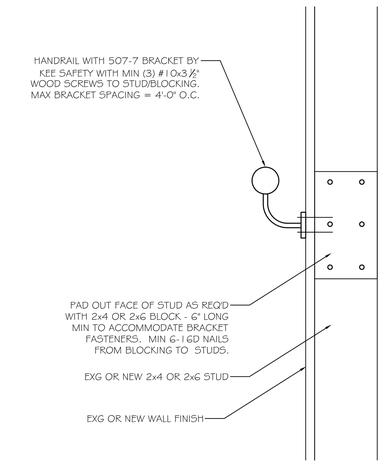

C1 HANDRAIL DETAIL
SCALE: NTS

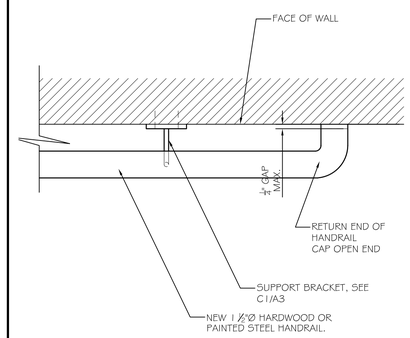

B2 HANDRAIL DETAIL
SCALE: NTS

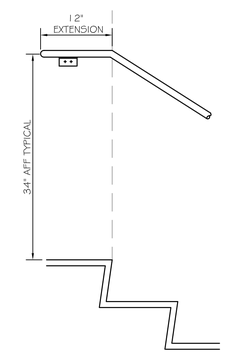

B1 HANDRAIL DETAIL
SCALE: NTS

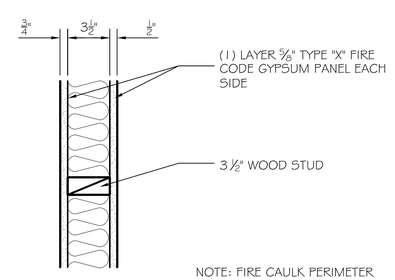

(UL DESIGN: U 305)

A1 1 HR RATED WALL ASSEMBLY
SCALE: NTS

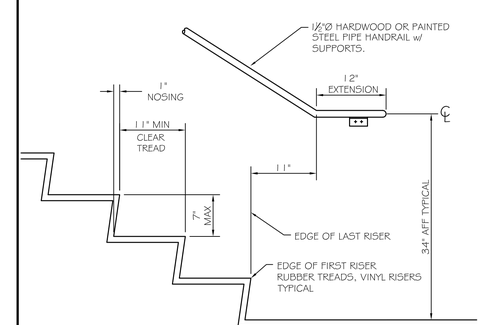

A2 HANDRAIL DETAIL
SCALE: NTS

STATE OF MAINE AARON WILSON No. 19429 LICENSED PROFESSIONAL ENGINEER

ASSOCIATED DESIGN PARTNERS INC.
80 Leighton Road
Falmouth, Maine 04105
Office: (207) 878-1751
Fax: (207) 878-1788
E-Mail: adp@adpengineering.com

THIS DRAWING, DESIGN AND ELECTRONIC FILE ARE THE PROPERTY OF ASSOCIATED DESIGN PARTNERS, INC. THE REPRODUCTION, COPYING OR ANY OTHER USE OF THIS DOCUMENT WITHOUT WRITTEN CONSENT IS PROHIBITED.

PROJECT: 735 WASHINGTON AVE.
PORTLAND, MAINE
FOR:
SHEET TITLE: BUILDING SECTION AND DETAILS
ISSUED FOR PERMITTING

REVISIONS			
No.	BY	DESCRIPTION	DATE

DATE : 11-23-16
SCALE : AS NOTED
DESIGN BY: ASW
DRAWN BY: RSC
FILE #: 16333-A1.dwg
PROJECT NUMBER: 16333
SHEET NO: A3