Reviewed for Code Compliance
Inspections Division
Approved with Conditions
Date: 06/07/17

MiTek USA, Inc.
16023 Swingley Ridge Rd
Chesterfield, MO 63017
314-434-1200

Re: 059284
MATT #2

The truss drawing(s) referenced below have been prepared by MiTek USA, Inc. under my direct supervision based on the parameters provided by Mainely Trusses.

Pages or sheets covered by this seal: I29069167 thru I29069168

My license renewal date for the state of Maine is December 31, 2017.

STATE OF MAINE
JUAN
GARCIA
No. 10090
LICENSED
PROFESSIONAL ENGINEER

February 21,2017

Garcia, Juan

IMPORTANT NOTE: Truss Engineer's responsibility is solely for design of individual trusses based upon design parameters shown on referenced truss drawings. Parameters have not been verified as appropriate for any use. Any location identification specified is for file reference only and has not been used in preparing design. Suitability of truss designs for any particular building is the responsibility of the building designer, not the Truss Engineer, per ANSI/TPI-1, Chapter 2.

Job	Truss	Truss Type	Qty	Ply	MATT #2
059284	T01	QUEENPOST	11	1	Job Reference (optional)

Mainely Trusses, Inc., Fairfield, ME

8.010 s Apr 20 2016 MiTek Industries, Inc. Tue Feb 21 06:24:0
ID:E5o62?GlR_zc8wgqhrs4qzySb3i-XW0kOEpYkA86INBX?bt3dRiQ?nY7ACe

Reviewed for Code Compliance
Inspections Division
Approved with Conditions
Date: 06/07/17

-1-0-0	5-9-15	7-5-0	8-11-7	14-10-0
1-0-0	5-9-15	1-7-1	1-6-7	5-10-9

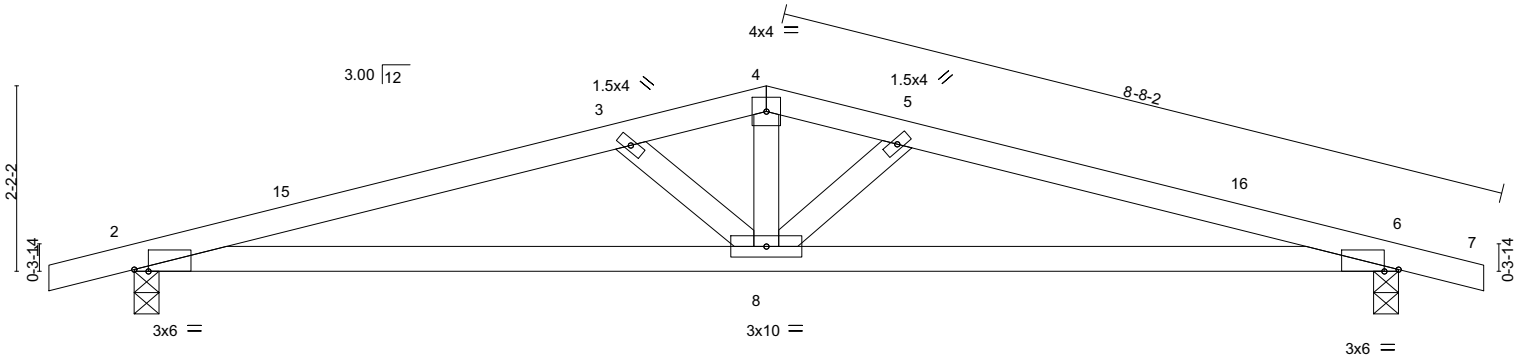

7-5-0	14-10-0
7-5-0	7-5-0

Plate Offsets (X,Y)-- [2:0-2-0,Edge], [6:0-2-0,Edge]

LOADING (psf)		**SPACING-**	2-0-0	**CSI.**		**DEFL.**	in	(loc)	l/defl	L/d	**PLATES**	**GRIP**
TCLL	50.4	Plate Grip DOL	1.15	TC	0.53	Vert(LL)	-0.14	8	>999	240	MT20	197/144
(Ground Snow=60.0)		Lumber DOL	1.15	BC	0.65	Vert(TL)	-0.22	8-14	>795	180		
TCDL	7.0	Rep Stress Incr	YES	WB	0.20	Horz(TL)	0.05	6	n/a	n/a		
BCLL	0.0	Code IRC2009/TPI2007		Matrix-MRH							Weight: 43 lb	FT = 20%
BCDL	10.0											

LUMBER-
TOP CHORD 2x4 SPF No.2
BOT CHORD 2x4 SPF No.2
WEBS 2x4 SPF No.2

BRACING-
TOP CHORD Structural wood sheathing directly applied or 3-3-15 oc purlins.
BOT CHORD Rigid ceiling directly applied or 10-0-0 oc bracing.

REACTIONS. (lb/size) 2=1114/0-3-8, 6=1115/0-3-8
Max Horz 2=-35(LC 8)
Max Uplift 2=-144(LC 5), 6=-144(LC 6)

FORCES. (lb) - Max. Comp./Max. Ten. - All forces 250 (lb) or less except when shown.
TOP CHORD 2-3=-2273/213, 3-4=-1835/138, 4-5=-1836/139, 5-6=-2266/212
BOT CHORD 2-8=-186/2142, 6-8=-156/2135
WEBS 3-8=-657/135, 4-8=-60/834, 5-8=-658/135

NOTES- (7)
1) Wind: ASCE 7-05; 100mph; TCDL=4.2psf; BCDL=6.0psf; h=25ft; Cat. II; Exp C; enclosed; MWFRS (low-rise); cantilever left and right exposed ; end vertical left and right exposed; Lumber DOL=1.60 plate grip DOL=1.60
2) TCLL: ASCE 7-05; Pg= 60.0 psf (ground snow); Pf=50.4 psf (flat roof snow); Category II; Exp C; Partially Exp.; Ct=1.2
3) Unbalanced snow loads have been considered for this design.
4) This truss has been designed for greater of min roof live load of 20.0 psf or 1.00 times flat roof load of 50.4 psf on overhangs non-concurrent with other live loads.
5) This truss has been designed for a 10.0 psf bottom chord live load nonconcurrent with any other live loads.
6) Provide mechanical connection (by others) of truss to bearing plate capable of withstanding 144 lb uplift at joint 2 and 144 lb uplift at joint 6.
7) RAKE LENGTH 8-8-2.

STATE OF MAINE
JUAN GARCIA
No. 10090
LICENSED
PROFESSIONAL ENGINEER

February 21,2017

WARNING - Verify design parameters and READ NOTES ON THIS AND INCLUDED MITEK REFERENCE PAGE MII-7473 rev. 10/03/2015 BEFORE USE.
Design valid for use only with MiTek® connectors. This design is based only upon parameters shown, and is for an individual building component, not a truss system. Before use, the building designer must verify the applicability of design parameters and properly incorporate this design into the overall building design. Bracing indicated is to prevent buckling of individual truss web and/or chord members only. Additional temporary and permanent bracing is always required for stability and to prevent collapse with possible personal injury and property damage. For general guidance regarding the fabrication, storage, delivery, erection and bracing of trusses and truss systems, see **ANSI/TPI1 Quality Criteria, DSB-89 and BCSI Building Component Safety Information** available from Truss Plate Institute, 218 N. Lee Street, Suite 312, Alexandria, VA 22314.

MiTek
16023 Swingley Ridge Rd
Chesterfield, MO 63017

Job	Truss	Truss Type	Qty	Ply	MATT #2
059284	T01GE	GABLE	2	1	Job Reference (optional)

Mainely Trusses, Inc., Fairfield, ME

8.010 s Apr 20 2016 MiTek Industries, Inc. Tue Feb 21 06:24:0
ID:E5o62?GIR_zc8wgqhrs4qzySb3i-XW0kOEpYkA86INBX?bt3dRiOnnf1AEL

Reviewed for Code Compliance
Inspections Division
Approved with Conditions
Date: 06/07/17

-1-0-0 | 7-5-0 | 14-10-0
1-0-0 | 7-5-0 | 7-5-0

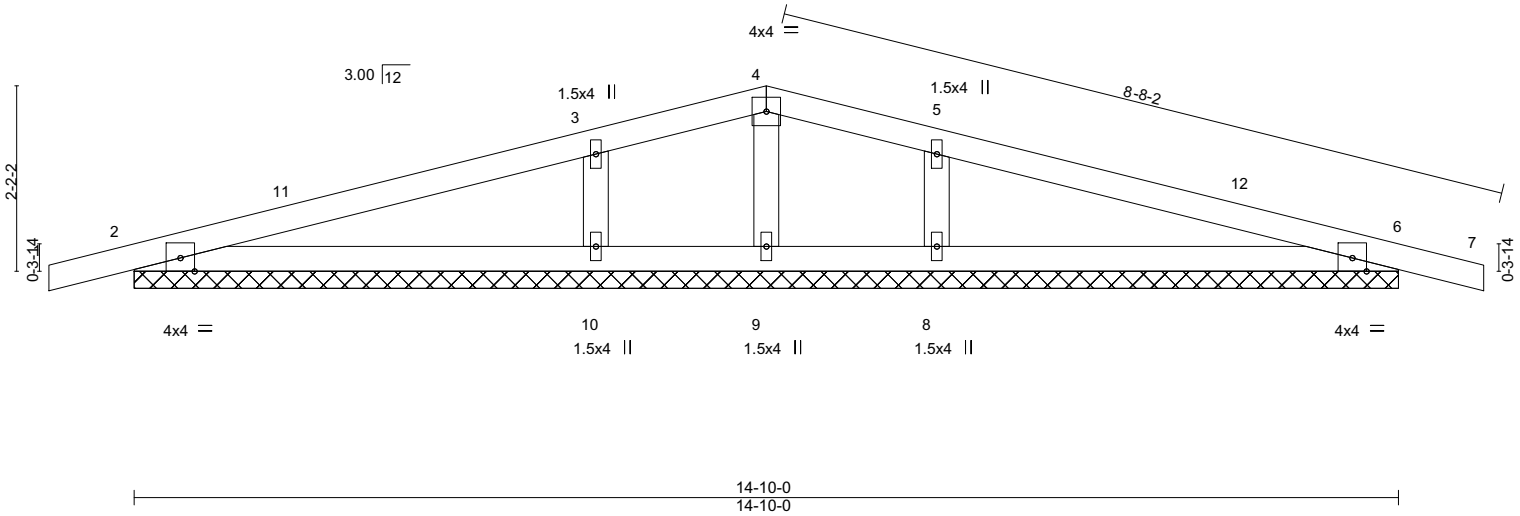

14-10-0
14-10-0

LOADING (psf)		SPACING-	2-0-0	CSI.		DEFL.	in	(loc)	l/defl	L/d	PLATES	GRIP
TCLL	50.4	Plate Grip DOL	1.15	TC	0.68	Vert(LL)	-0.02	7	n/r	180	MT20	197/144
(Ground Snow=60.0)		Lumber DOL	1.15	BC	0.21	Vert(TL)	-0.00	7	n/r	80		
TCDL	7.0	Rep Stress Incr	YES	WB	0.10	Horz(TL)	0.00	6	n/a	n/a		
BCLL	0.0	Code IRC2009/TPI2007		Matrix-SH		Wind(LL)	-0.02	7	n/r	120	Weight: 41 lb	FT = 20%
BCDL	10.0											

LUMBER-
TOP CHORD 2x4 SPF No.2
BOT CHORD 2x4 SPF No.2
OTHERS 2x4 SPF No.2

BRACING-
TOP CHORD Structural wood sheathing directly applied or 6-0-0 oc purlins.
BOT CHORD Rigid ceiling directly applied or 6-0-0 oc bracing.

REACTIONS. All bearings 14-10-0.
(lb) - Max Horz 2=-45(LC 6)
Max Uplift All uplift 100 lb or less at joint(s) except 2=-137(LC 7), 6=-142(LC 8), 9=-108(LC 1), 10=-171(LC 5), 8=-171(LC 6)
Max Grav All reactions 250 lb or less at joint(s) 9 except 2=440(LC 2), 6=440(LC 3), 10=854(LC 2), 8=854(LC 3)

FORCES. (lb) - Max. Comp./Max. Ten. - All forces 250 (lb) or less except when shown.
WEBS 3-10=-730/246, 5-8=-730/246

NOTES-
1) Wind: ASCE 7-05; 100mph; TCDL=4.2psf; BCDL=6.0psf; h=25ft; Cat. II; Exp C; enclosed; MWFRS (low-rise) gable end zone; cantilever left and right exposed ; end vertical left and right exposed; Lumber DOL=1.60 plate grip DOL=1.60
2) Truss designed for wind loads in the plane of the truss only. For studs exposed to wind (normal to the face), see Standard Industry Gable End Details as applicable, or consult qualified building designer as per ANSI/TPI 1.
3) TCLL: ASCE 7-05; Pg= 60.0 psf (ground snow); Pf=50.4 psf (flat roof snow); Category II; Exp C; Partially Exp.; Ct=1.2
4) Unbalanced snow loads have been considered for this design.
5) This truss has been designed for greater of min roof live load of 20.0 psf or 1.00 times flat roof load of 50.4 psf on overhangs non-concurrent with other live loads.
6) Gable requires continuous bottom chord bearing.
7) Gable studs spaced at 2-0-0 oc.
8) This truss has been designed for a 10.0 psf bottom chord live load nonconcurrent with any other live loads.
9) Provide mechanical connection (by others) of truss to bearing plate capable of withstanding 137 lb uplift at joint 2, 142 lb uplift at joint 6, 108 lb uplift at joint 9, 171 lb uplift at joint 10 and 171 lb uplift at joint 8.

STATE OF MAINE
JUAN GARCIA
No. 10090
LICENSED
PROFESSIONAL ENGINEER

February 21,2017

WARNING - Verify design parameters and READ NOTES ON THIS AND INCLUDED MITEK REFERENCE PAGE MII-7473 rev. 10/03/2015 BEFORE USE.
Design valid for use only with MiTek® connectors. This design is based only upon parameters shown, and is for an individual building component, not a truss system. Before use, the building designer must verify the applicability of design parameters and properly incorporate this design into the overall building design. Bracing indicated is to prevent buckling of individual truss web and/or chord members only. Additional temporary and permanent bracing is always required for stability and to prevent collapse with possible personal injury and property damage. For general guidance regarding the fabrication, storage, delivery, erection and bracing of trusses and truss systems, see **ANSI/TPI1 Quality Criteria, DSB-89 and BCSI Building Component Safety Information** available from Truss Plate Institute, 218 N. Lee Street, Suite 312, Alexandria, VA 22314.

MiTek
16023 Swingley Ridge Rd
Chesterfield, MO 63017

CITY OF PORTLAND, MAINE
Reviewed for Code Compliance
Inspections Division
Approved with Conditions
Date: 06/07/17

ools

OCATION AND ORIENTATION

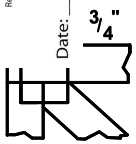

Center plate on joint unless x, y offsets are indicated. Dimensions are in ft-in-sixteenths. Apply plates to both sides of truss and fully embed teeth.

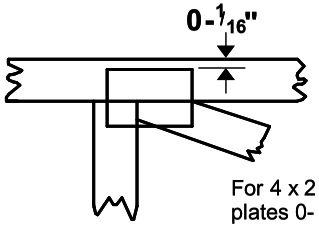

For 4 x 2 orientation, locate plates 0- 1/16" from outside edge of truss.

This symbol indicates the required direction of slots in connector plates.

*** Plate location details available in MiTek 20/20 software or upon request.**

PLATE SIZE

4 x 4

The first dimension is the plate width measured perpendicular to slots. Second dimension is the length parallel to slots.

LATERAL BRACING LOCATION

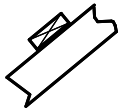

Indicated by symbol shown and/or by text in the bracing section of the output. Use T or I bracing if indicated.

BEARING

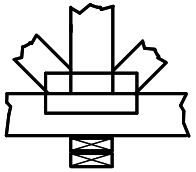

Indicates location where bearings (supports) occur. Icons vary but reaction section indicates joint number where bearings occur. Min size shown is for crushing only.

Industry Standards:

ANSI/TPI1: National Design Specification for Metal Plate Connected Wood Truss Construction.
DSB-89: Design Standard for Bracing.
BCSI: Building Component Safety Information, Guide to Good Practice for Handling, Installing & Bracing of Metal Plate Connected Wood Trusses.

Numbering System

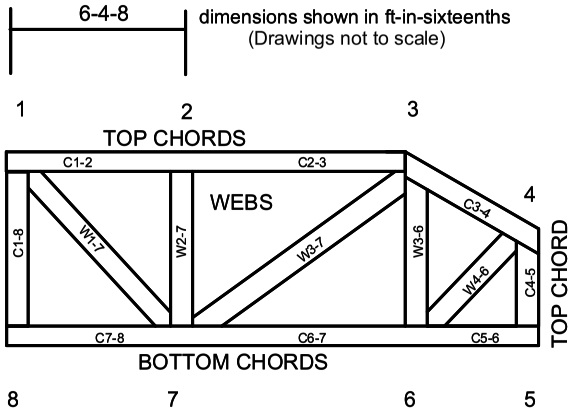

JOINTS ARE GENERALLY NUMBERED/LETTERED CLOCKWISE AROUND THE TRUSS STARTING AT THE JOINT FARTHEST TO THE LEFT.

CHORDS AND WEBS ARE IDENTIFIED BY END JOINT NUMBERS/LETTERS.

PRODUCT CODE APPROVALS

ICC-ES Reports:

ESR-1311, ESR-1352, ESR1988
ER-3907, ESR-2362, ESR-1397, ESR-3282

Trusses are designed for wind loads in the plane of the truss unless otherwise shown.

Lumber design values are in accordance with ANSI/TPI 1 section 6.3 These truss designs rely on lumber values established by others.

© 2012 MiTek® All Rights Reserved

MiTek Engineering Reference Sheet: MII-7473 rev. 10/03/2015

General Safety Notes

Failure to Follow Could Cause Property Damage or Personal Injury

1. Additional stability bracing for truss system, e.g. diagonal or X-bracing, is always required. See BCSI.
2. Truss bracing must be designed by an engineer. For wide truss spacing, individual lateral braces themselves may require bracing, or alternative Tor I bracing should be considered.
3. Never exceed the design loading shown and never stack materials on inadequately braced trusses.
4. Provide copies of this truss design to the building designer, erection supervisor, property owner and all other interested parties.
5. Cut members to bear tightly against each other.
6. Place plates on each face of truss at each joint and embed fully. Knots and wane at joint locations are regulated by ANSI/TPI 1.
7. Design assumes trusses will be suitably protected from the environment in accord with ANSI/TPI 1.
8. Unless otherwise noted, moisture content of lumber shall not exceed 19% at time of fabrication.
9. Unless expressly noted, this design is not applicable for use with fire retardant, preservative treated, or green lumber.
10. Camber is a non-structural consideration and is the responsibility of truss fabricator. General practice is to camber for dead load deflection.
11. Plate type, size, orientation and location dimensions indicated are minimum plating requirements.
12. Lumber used shall be of the species and size, and in all respects, equal to or better than that specified.
13. Top chords must be sheathed or purlins provided at spacing indicated on design.
14. Bottom chords require lateral bracing at 10 ft. spacing, or less, if no ceiling is installed, unless otherwise noted.
15. Connections not shown are the responsibility of others.
16. Do not cut or alter truss member or plate without prior approval of an engineer.
17. Install and load vertically unless indicated otherwise.
18. Use of green or treated lumber may pose unacceptable environmental, health or performance risks. Consult with project engineer before use.
19. Review all portions of this design (front, back, words and pictures) before use. Reviewing pictures alone is not sufficient.
20. Design assumes manufacture in accordance with ANSI/TPI 1 Quality Criteria.