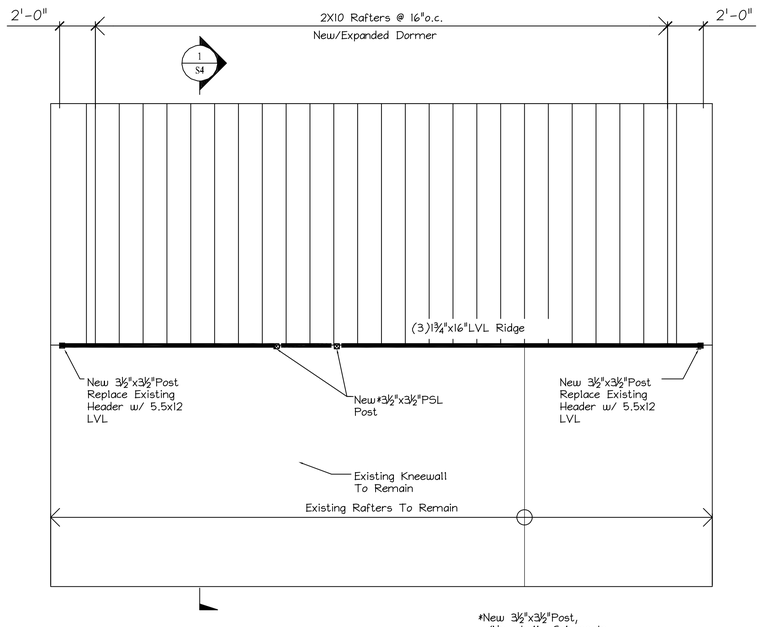

*New 3½"x3½"Post,
w/New Lally Column In
Basement Below.
Build New 30"x30"x10" Conc.
Pad at New Columns

NEW ROOF FRAMING PLAN

Scale: 1/4" = 1'-0"

GENERAL NOTES:

1. STRUCTURAL DRAWINGS SHALL BE USED IN CONJUNCTION WITH JOB SPECIFICATIONS AND ARCHITECTURAL, MECHANICAL, ELECTRICAL, PLUMBING, AND SITE DRAWINGS. CONSULT THESE DRAWINGS FOR LOCATIONS AND DIMENSIONS OF OPENINGS, CHASES, INSERTS, REGLETS, SLEEVES, DEPRESSIONS, AND OTHER DETAILS NOT SHOWN ON THE STRUCTURAL DRAWINGS.

2. ALL DIMENSIONS AND CONDITIONS MUST BE VERIFIED IN THE FIELD. ANY DISCREPANCIES SHALL BE BROUGHT TO THE ATTENTION OF THE ENGINEER BEFORE PROCEEDING WITH THE AFFECTED PART OF THE WORK.

3. THE STRUCTURE IS DESIGNED TO BE SELF SUPPORTING AND STABLE AFTER THE BUILDING IS COMPLETE. IT IS THE CONTRACTOR'S SOLE RESPONSIBILITY TO DETERMINE ERECTION PROCEDURES AND SEQUENCE TO ENSURE SAFETY OF THE STRUCTURE AND PERSONNEL DURING ERECTION. THIS INCLUDES THE ADDITION OF THE NECESSARY SHORING, SHEETING, TEMPORARY BRACING, GUYS OR TIEDOWNS. SUCH MATERIAL SHALL REMAIN THE PROPERTY OF THE CONTRACTOR AFTER COMPLETION OF THE PROJECT.

4. ALL APPLICABLE FEDERAL, STATE, AND MUNICIPAL REGULATIONS SHALL BE FOLLOWED, INCLUDING THE FEDERAL DEPARTMENT OF LABOR OCCUPATIONAL SAFETY AND HEALTH ACT.

5. IT IS THE OWNER'S SOLE RESPONSIBILITY TO EMPLOY ONE OR MORE SPECIAL INSPECTORS (IF REQUIRED) TO PROVIDE INSPECTIONS IN COMPLIANCE WITH ALL APPLICABLE REQUIREMENTS OF IBC 2006.

OPENING HEADER SCHEDULE

SPAN	DESCRIPTION	JACK STUDS (NUMBER)	KING STUDS (NUMBER)
3FT	(3) 2x8's	(1) Stud	() Studs
4FT	(3) 2x12's	(1) Stud	(1) Studs
6FT	3 ½"x 9 ¼" LVL	(2) Stud	(2) Studs
8FT	5 ¼"x11¼" LVL	(2) Stud	(2) Studs
10FT	5 ¼"x14" LVL	(3) Stud	(2) Studs
12FT	5 ¼"x16" LVL	(3) Stud	(2) Studs

WOOD FRAMING NOTES:

1. STRUCTURAL LUMBER:
   SPRUCE PINE FIR NO1/NO2 OR BETTER
   Fb = 875 PSI Fv = 125 PSI
   Fc = 1150 PSI E = 1400000 PSI

   MANUFACTURED LUMBER:
   BOISE CASCADE VERSA-LAM 2.0 3100
   Fb = 3100 PSI Fv = 285 PSI
   Fc = 3000 PSI E = 2000000 PSI

2. DESIGN CODE:
   IBC 2009 / NATIONAL DESIGN SPECIFICATIONS FOR WOOD CONSTRUCTION BY THE NATIONAL FOREST PRODUCTS ASSOCIATION.

3. NAILING REQUIREMENTS FOR PLYWOOD SHEATHING:
   SEE DETAILS FOR NAILING AND SPACING REQUIREMENTS.

4. SPIKE TOGETHER ALL FRAMING MEMBERS WHICH ARE BUILT-UP USING MULTIPLE 2x LUMBER.

5. PROVIDE GALVANIZED METAL TIES EQUAL TO SIMPSON H2.5 HURRICANE TIES BETWEEN ROOF RAFTERS OR TRUSSES AND SUPPORTING WALL MEMBERS, UNLESS SHOWN OTHERWISE. PROVIDE GALVANIZED METAL CONNECTORS EQUAL TO SIMPSON TC26 TRUSS CONNECTOR BETWEEN ALL ROOF SCISSOR TRUSSES AND SUPPORTING WALL MEMBERS, UNLESS SHOWN OTHERWISE.

6. PROVIDE PRESSURE TREATED LUMBER FOR ALL LUMBER IN CONTACT WITH MASONRY OR CONCRETE.

7. ROOF SHEATHING: 5/8" APA RATED SHEATHING, EXTERIOR OR STRUCTURAL I OR II RATED SHEATHING, SPAN RATING 32/16 (TRUSSES), 24/12 (JOISTS). INSTALL SHEETS WITH FACE GRAIN DIRECTION PERPENDICULAR TO SUPPORTING MEMBERS.

8. PROVIDE ½"Φ THRU BOLTS STAGGERED @ 24" O.C. FOR ATTACHEMENT OF 2x NAILER AT TOP OR BOTTOM OF WF BEAM (COORDINATE w/ PLANS)

9. WALL CONSTRUCTION - FIRST FLOOR
   FRAMING AS SHOWN ON PLANS
   P.T. 2x6 SILL PLATE
   7/16" APA SHEATHING

10. ROOF CONSTRUCTION
    FRAMING AS SHOWN ON PLANS
    5/8" APA RATED PLYWOOD SHEATHING (REFER TO NOTE #7)
    PROVIDE 8d NAILS @ 12"o.c. ALONG FRAMING MEMBERS.

11. ALL NAILS, SPIKES, BOLTS ETC. FASTENING MEMBERS TO PRESSURE TREATED LUMBER SHALL BE EITHER STAINLESS STEEL OR HEAVY GALVANIZED.

CONCRETE NOTES:

1. ALL CONCRETE WORK SHALL CO

2. ALL CONCRETE EXCEPT INTERIO
   SHALL BE 3000 PSI AT 28 DA
   ALL INTERIOR AND EXTERIOR
   AT 28 DAYS AND A MAXIMUM
   SHALL BE ¾" (WALL/FOOTINGS,

3. CONCRETE TO REMAIN EXPOSED
   NO AIR ENTRAINMENT IN INTER

4. CONCRETE SHALL NOT BE PLAC

5. REINFORCING BARS SHALL CONF
   DEFORMED BARS SHALL BE DE
   ACCORDANCE TO ACI-315 LATE
   ACCORDANCE WITH ACI-318.

6. SPLICES OF REINFORCING BARS
   ACI-318.

7. ANCHOR RODS SHALL CONFORM TO ASTM F1554-36.

8. HOOKS NOT DIMENSIONED SHALL BE ACI STANDARD HOOKS.

9. CONCRETE COVER OVER REINFORCEMENT SHALL BE AS FOLLOWS:
   CONCRETE CAST AGAINST EARTH = 3"
   CONCRETE EXPOSED TO EARTH OR WEATHER = 1½"
   CONCRETE NOT EXPOSED TO EARTH OR WEATHER = ¾"

10. PROVIDE CONTROL JOINTS IN STRUCTURAL SLAB AT 12-0" ON CENTER MAX.

11. PROPORTION DESIGN MIXES TO PROVIDE CONCRETE FOR INTERIOR AND EXTERIOR SLABS-ON-GRADE WITH THE FOLLOWING PROPERTIES:
    a. STRENGTH; 4000psi @ 28 DAYS, 3/4" AGGREGATE
    b. W/C RATIO: 0.46
    c. ENTRAINED AIR: 6% ±1%
    d. SLUMP: 3"± 1"

DESIGN NOTES:

1. THIS BUILDING IS DESIGNED TO COMPLY WITH THE 2009 EDITION OF THE INTERNATIONAL BUILDING CODE.

2. SNOW LOAD
   a. GROUND SNOW LOAD = 60 PSF
   b. FLAT ROOF SNOW LOAD = 42 PSF
   c. SNOW LOAD IMPORTANCE FACTOR I = 1.0
   d. SNOW EXPOSURE FACTOR Ce = 1.0
   e. SNOW THERMAL FACTOR Ct= 1.0
   f. BALANCE AND UNBALANCED SNOW LOADS IN ACCORDANCE WITH ASCE 7/05

3. WIND LOADS:
   a. BASIC WIND SPEED V = 100 MPH
   b. WIND LOAD IMPORTANCE FACTOR I = 1.0
   c. WIND INTERNAL PRESSURE COEFFICIENT GCPi = ±.18
   d. Wind Exposure = B

4. ROOF DEAD LOAD
   a. TOP CHORD = 10.0 PSF
   b. BOTTOM CHORD = 15.0 PSF
   c. HVAC UNIT(S) = TO BE DETERMINED

5. ROOF LIVE LOAD
   a. TOP CHORD = 20.0 PSF
   b. BOTTOM CHORD - 10.0 PSF

6. EARTHQUAKE LOAD:
   a. DESIGN OF EARTHQUAKE LOAD IN ACCORDANCE WITH ASCE 7/05
   b. SEISMIC IMPORTANCE FACTOR I = 1.0
   c. 0.2s MAPPED SPECTRAL RESPONSE ACCELERATION Ss = 0.316
   d. 1.0s MAPPED SPECTRAL RESPONSE ACCELERATION S1 = 0.077
   e. SITE CLASS = CLASS D.
   f. SPECTRAL RESPONSE COEFFICIENT SDS = 0.326
   g. SPECTRAL RESPONSE COEFFICIENT SD1 = 0.124
   h. SEISMIC DESIGN CATEGORY = CATEGORY B
   i. BASIC SEISMIC FORCE RESISTING SYSTEM: BEARING WALL SYSTEM = LIGHT FRAMED WALL SYSTEMS SHEATHED WITH WOOD STRUCTURAL PANELS RATED FOR SHEAR RESISTANCE
   j. RESPONSE MODIFICATION FACTOR R = 6
   k. DEFLECTION AMPLIFICATION FACTOR CD = 4
   l. ANALYSIS PROCEDURE = EQUIVALENT LATERAL FORCE PROCEDURE

7. DEFLECTION CRITERIA
   a. ROOF (LIVE) = L/360
   b. ROOF (TOTAL) = L/240

8. FLOOR LIVE LOAD
   a. 1st FLOOR = 40 PSF
   b. SLEEPING ROOMS ON 2ND FLR = 30 PSF

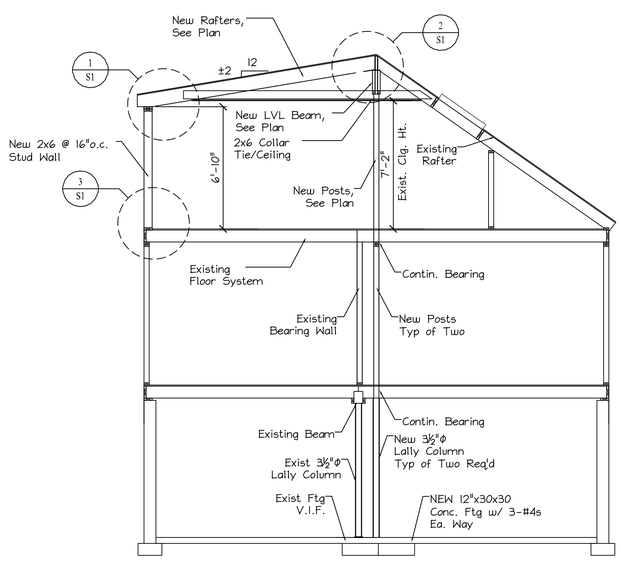

CROSS SECTION

Scale: 1/4" = 1'-0"

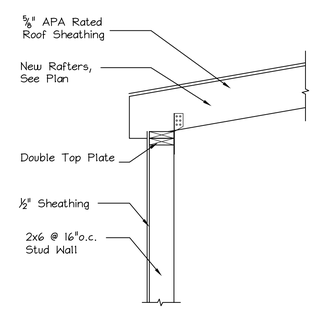

SECTION 1/S1
Scale: 3/4" = 1'-0"

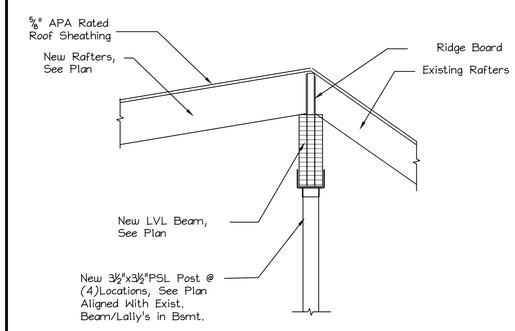

SECTION 2/S1
Scale: 3/4" = 1'-0"

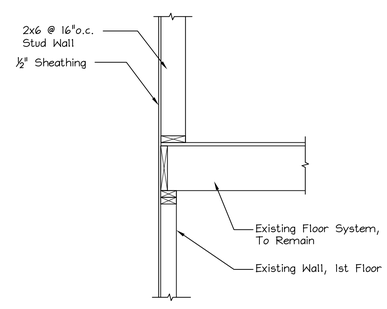

SECTION 3/S1
Scale: 3/4" = 1'-0"

Inspections Division
Date: 04/12/17

3 _____
2 _____
1 _____

STATE OF MAINE
BRUCE W. MACLEOD
No. 5422
LICENSED
PROFESSIONAL ENGINEER

MACLEOD
STRUCTURAL ENGINEERS, PA
90 Bridge Street Suite 252
Westbrook, Maine 04092 207.839.0980

Dormer Expansion
24 Brookside Lane
Portland, Maine

TITLE: FRAMING PLAN & SECTION

DATE: 03.09.17	DRAWN BY: BWM	DRAWING NUMBER:
SCALE: as noted	PROJ NO: 2017-022	S-1