EROSION AND SEDIMENTATION CONTROL NOTES:

IN ORDER TO EFFECTIVELY PREVENT AND CONTROL EROSION RELATED TO SOIL DISTURBANCE, THE FOLLOWING BEST MANAGEMENT PRACTICES (BMPS) SHALL BE EMPLOYED:

1. TEMPORARY SOIL STABILIZATION BMPS

TEMPORARY MULCHING SHALL BE APPLIED IMMEDIATELY TO ANY AREAS THAT HAVE BEEN TEMPORARILY OR PERMANENTLY SEEDED. ANY DISTURBED SOIL WITHIN 100' OF A STREAM, WATER BODY OR WETLAND MUST RECEIVE TEMPORARY MULCH WITHIN 7 DAYS FOLLOWING DISTURBANCE AND BEFORE ANY STORM EVENT. ALL OTHER AREAS SHALL RECEIVE TEMPORARY MULCH WITHIN 14 DAYS OF DISTURBANCE. AREAS WHICH CANNOT BE SEEDED DURING THE GROWING SEASON SHALL BE MULCHED FOR OVER-WINTER PROTECTION. THE FOLLOWING ARE ACCEPTABLE TEMPORARY MULCHING METHODS:

HAY OR STRAW MULCHES NEED TO BE AIR-DRIED, FREE OF UNDESIRABLE SEEDS AND COARSE MATERIALS. APPLICATION RATE MUST BE 2 BALES (70-90 POUNDS) PER 1000 SQ FT OR 1.5 TO 2 TONS (90-100 BALES) PER ACRE TO COVER 75-90% OF THE GROUND SURFACE. HAY OR STRAW CAN BE DRIVEN INTO THE GROUND WITH TRACKED EQUIPMENT IF SLOPES ARE LESS THAN 3%, OR CAN BE ANCHORED WITH JUTE, WOOD FIBER OR PLASTIC NETTING ON STEEPER SLOPES.

EROSION CONTROL MIX MUST CONSIST PRIMARILY OF ORGANIC MATERIAL AND WILL INCLUDE ANY OF THE FOLLOWING: SHREDDED BARK, STUMP GRINDINGS, COMPOSTED BARK OR OTHER ACCEPTABLE PRODUCTS BASED ON A SIMILAR RAW SOURCE. WOOD OR BARK CHIPS, GROUND CONSTRUCTION DEBRIS OR REPROCESSED WOOD PRODUCTS ARE NOT ACCEPTABLE. EROSION CONTROL MIX CAN BE USED AS A STAND-ALONE REINFORCEMENT ON SLOPES OF 2 HORIZONTAL TO 1 VERTICAL OR LESS AND DRAINING IN SHEET FLOW. IT CAN BE PLACED WITH A HYDRAULIC BUCKET, WITH A PNEUMATIC BLOWER OR BY HAND, AND MUST PROVIDE 100% SOIL COVERAGE.

EROSION CONTROL MIX SHALL MEET THE FOLLOWING SPECIFICATIONS:
- ORGANIC MATTER CONTENT SHALL BE BETWEEN 80-100%, DRY WEIGHT BASIS.
- PARTICLE SIZE BY WEIGHT SHALL BE 100% PASSING A 6 IN. SCREEN AND BETWEEN 70-85% PASSING 0.75 IN. SCREEN
- ORGANIC PORTION NEEDS TO BE FIBROUS AND ELONGATED
- LARGE PORTIONS OF SILTS, CLAYS OR FINE SANDS ARE NOT ACCEPTABLE IN THE MIX

WHEN USED AS MULCH, THE THICKNESS OF THE ERISION CONTROL MIX IS BASED UPON THE FOLLOWING:

LENGTH OF SLOPE	3:1 SLOPE OR LESS	BETWEEN 2:1 AND 3:1 SLOPE
LESS THAN 20 FT	2.0 IN.	4.0 IN.
BETWEEN 20 - 60 FT	3.0 IN.	5.0 IN.
BETWEEN 60 - 100 FT	4.0 IN.	6.0 IN.

CHEMICAL MULCHES AND SOIL BINDERS MAY BE USED AS DIRECTED BY THE ENGINEER. THE CONTRACTOR SHALL CONSULT WITH THE MANUFACTURER TO DETERMINE ADEQUATE APPLICATION RATES AND METHODS.

EROSION CONTROL BLANKETS AND MATS SHALL BE USED ON STEEP SLOPES AND IN THE BOTTOM OF GRASSED WATERWAYS, OR AS OTHERWISE DIRECTED BY THE ENGINEER. THE MAT SHALL BE INSTALLED WITH FIRM CONTINUOUS CONTACT WITH THE SOIL AND STAPLED ACCORDING TO THE MANUFACTURER'S RECOMMENDATIONS.

TEMPORARY MULCH SHALL BE INSPECTED FOLLOWING ANY SIGNIFICANT RAINFALL EVENT. IF LESS THAN 90% OF THE SOIL SURFACE IS COVERED BY MULCH, ADDITIONAL MULCH SHALL BE IMMEDIATELY APPLIED. ERISION CONTROL MATS AND MULCH ANCHORING MUST BE INSPECTED AFTER RAINFALL EVENTS FOR DISLOCATION OR FAILURE, AND REPAIRED IMMEDIATELY. INSPECTIONS SHALL TAKE PLACE UNTIL 95% OF THE SOIL SURFACE IS COVERED WITH PERMANENT VEGETATION. WHERE MULCH IS USED WITH ORNAMENTAL PLANTINGS, INSPECT PERIODICALLY THROUGHOUT THE YEAR TO DETERMINE IF MULCH IS MAINTAINING COVERAGE OF THE SOIL SURFACE, AND REPAIR AS NEEDED.

TEMPORARY VEGETATION SHALL BE ESTABLISHED ON SOILS THAT WILL NOT BE BROUGHT TO FINAL GRADE FOR A PERIOD OF MORE THAN 30 DAYS. IF TEMPORARY VEGETATION CANNOT BE ESTABLISHED PRIOR TO OCTOBER 15, TEMPORARY MULCH SHALL BE APPLIED THROUGH THE WINTER AND TEMPORARY VEGETATION SHALL BE PLANTED AT THE BEGINNING OF THE GROWING SEASON THE FOLLOWING YEAR. TO PREPARE THE SEEDBED, THE CONTRACTOR SHALL APPLY FERTILIZER AT A RATE OF 600 POUNDS PER ACRE OF 10-10-10 (N-P205-K20) OR EQUIVALENT AND LIMESTONE AT A RATE OF 3 TONS PER ACRE, IF NECESSARY. LOOSEN SOIL TO A DEPTH OF 2 INCHES IN AREAS THAT HAVE BEEN COMPACTED BY CONSTRUCTION ACTIVITIES. GRASS SEED SHALL BE SELECTED BASED UPON THE TIME OF YEAR THE PLANTING WILL TAKE PLACE AS SUMMARIZED IN THE FOLLOWING TABLE:

SEED	LB. PER ACRE	RECOMMENDED SEEDING DATES
WINTER RYE	112	8/15 - 10/1
OATS	80	4/1 - 7/1 8/15 - 9/15
ANNUAL RYEGRASS	40	4/1 - 7/1

TEMPORARY SEEDING SHALL BE PERIODICALLY INSPECTED TO MAINTAIN AT LEAST 95% VEGETATIVE COVER OF SOIL SURFACE. IF ANY EVIDENCE OF EROSION OR SEDIMENTATION IS APPARENT, REPAIRS SHALL BE MADE AND OTHER TEMPORARY MEASURES SHALL BE USED IN THE INTERIM SUCH AS TEMPORARY MULCH, FILTER BARRIERS, ETC.

2. SEDIMENT BARRIER BMPS

TEMPORARY SEDIMENT BARRIERS ARE INSTALLED ACROSS OR ALONG THE TOE OF A SLOPE AND INCLUDE ANY OF THE FOLLOWING:

FILTER BARRIER FENCE, ALSO CALLED SILT FENCE, SHALL BE INSTALLED WHERE SHOWN ON THE PLANS AND IN ACCORDANCE WITH MANUFACTURERS RECOMMENDATIONS. THE FILTER FABRIC SHALL BE A PERVIOUS SHEET OF PROPYLENE, NYLON, POLYESTER OR ETHYLENE YARN AND SHALL PROVIDE A MINIMUM OF 6 MONTHS USABLE CONSTRUCTION LIFE INCLUDING PROTECTION AGAINST ULTRA-VIOLET LIGHT. THE HEIGHT OF THE FENCE SHALL NOT EXCEED 36 INCHES INSTALLED AND POST SPACING SHALL NOT EXCEED 6 FEET. JOINTS IN THE FENCE SHALL BE AVOIDED TO THE EXTENT POSSIBLE, AND IF NECESSARY SHALL BE SPLICED TOGETHER AT A SUPPORT POST WITH A MINIMUM 6 INCH OVERLAP. A TRENCH SHALL BE EXCAVATED APPROXIMATELY 4 INCHES WIDE AND 4 INCHES DEEP, AND THE BOTTOM 6-8 INCHES OF FABRIC SHALL BE "TOED-IN" TO THE TRENCH AND COMPACTED. THE TRENCH SHOULD BE UPHILL OF THE FABRIC PRIOR TO BURIAL.

STRAY/HAY BALES SHALL BE INSTALLED WHERE SPECIFIED ON THE PLANS IN A SINGLE ROW WITH THE ENDS OF ADJACENT BALES TIGHTLY ABUTTING ONE ANOTHER. ALL BALES SHALL BE EITHER WIRE-BOUND OR STRING-TIED. THE BARRIER SHALL BE ENTRENCHED AND BACKFILLED TO A DEPTY OF AT LEAST 4 INCHES, AND THE BALES SHALL BE SECURED WITH AT LEAST TWO WOODEN STAKES OR STEEL REBAR PER BALE. STAKES SHALL BE DRIVEN IN A DIRECTION TO PUSH THE BALES TOGETHER. GAPS BETWEEN BALES SHALL BE CHINKED WITH HAY.

EROSION CONTROL MIX BERMS ARE LINEAR BARRIERS COMPOSED OF EROSION CONTROL MIX AS SPECIFIED ABOVE. THE BERM MUST BE A MINIMUM OF 12 INCHES TALL AND 24 INCHES WIDE AT THE BASE IF UPHILL SLOPES ARE LESS THAN 5%. STEEPER SLOPES OR SLOPES GREATER THAN 20 FEET LONG MAY REQUIRE A LARGER WIDTH BERM. EROSION CONTROL MIX BERMS AT THE BASE OF A LONG OR STEEP SLOPE MAY ALSO REQUIRE A FILTER FENCE TO BE INSTALLED ON THE DOWNHILL SIDE OF THE BERM TO PROVIDE ADDITIONAL STABILIZATION AGAINST HIGH RUNOFF FLOWS.

CONTINUOUS CONTAINED BERMS, WHICH ARE ALSO REFERRED TO AS A FILTER SOCK, PROVIDES ADDITIONAL STABILITY TO AN EROSION CONTROL MIX BERM AND SHOULD BE USED IN FROZEN GROUND CONDITIONS OR IN AREAS THAT RECEIVE CONCENTRATED FLOW.

SEDIMENT BARRIERS SHALL BE INSPECTED AFTER ANY SIGNIFICANT RAINFALL EVENT AND REPAIRED IMMEDIATELY IF THERE ARE ANY SIGNS OF EROSION OR SEDIMENTATION BELOW THE BARRIERS. IF THERE ARE SIGNS OF UNDERCUTTING AT THE CENTER OR EDGES OF THE BARRIER, OR IF LARGE VOLUMES OF WATER ARE IMPOUNDED BEHIND THE BARRIER, IT MAY BE NECESSARY TO REPLACE THE BARRIER WITH A TEMPORARY STONE CHECK DAM. SEDIMENT SHALL BE REMOVED ONCE IT REACHES HALF THE BARRIER HEIGHT. AFTER THE BARRIER IS REMOVED, ANY REMAINING SILT SHALL EITHER BE REMOVED OR GRADED TO CONFORM WITH THE EXISTING TOPOGRAPHY AND VEGETATED.

3. TEMPORARY CHECK DAMS

STONE CHECK DAMS SHALL BE INSTALLED IN SWALES OR DRAINAGE DITCHES TO REDUCE STORMWATER VELOCITIES AS SHOWN ON THE PLANS. STONE CHECK DAMS ARE NOT EFFECTIVE IN REMOVING SEDIMENT AND SHOULD BE USED IN CONJUNCTION WITH SEDIMENT BARRIERS IDENTIFIED ABOVE. TEMPORARY CHECK DAMS MAY BE LEFT IN PLACE PERMANENTLY IN MOST CASES. CHECK DAMS SHOULD BE NO HIGHER THAN 24 INCHES, AND THE CENTER OF THE CHECK DAM MUST BE AT LEAST 6 INCHES LOWER THAN THE OUTSIDE EDGES. CHECK DAMS SHOULD BE SPACED SUCH THAT THE CREST OF THE DOWNSTREAM CHECK DAM IS AT THE SAME ELEVATION AS THE TOE OF THE UPSTREAM CHECK DAM. CHECK DAMS IN A DRAINAGE DITCH OR WATERWAY SHOULD BE INSTALLED PRIOR TO DIRECTING RUNOFF TO THEM.

4. STORM DRAIN INLET PROTECTION

STORM DRAIN INLETS THAT ARE MADE OPERATIONAL BEFORE THEIR DRAINAGE AREA IS STABILIZED SHALL BE PROTECTED WITH A FILTER UNTIL THE DRAINAGE AREA IS EITHER PAVED OR STABILIZED WITH 95% VEGETATIVE GROWTH. THE FOLLOWING ARE ACCEPTABLE BMPS ASSOCIATED WITH STORM DRAIN INLET PROTECTION:

HAY BALE OR SILT FENCE INLET STRUCTURE CONSISTS OF HAY BALES OR SILT FENCE CONFIGURED AROUND A CATCH BASIN INLET FRAME AND INSTALLED ACCORDING TO THE METHODS OUTLINED ABOVE. THIS METHOD IS SUITABLE FOR OPEN PIPE (CULVERT) INLETS, FIELD INLETS OR ROAD INLETS THAT HAVE NOT YET BEEN PAVED.

MANUFACTURED SEDIMENT FILTERS ARE THE PREFERRED METHOD FOR PROTECTING CATCH BASIN INLETS IN PAVED OR GRAVEL ROADWAYS. THE FILTERS TYPICALLY CONSIST OF A FABRIC OR OTHER PERVIOUS MATERIAL THAT IS PLACED ABOVE OR BELOW THE GRATE THAT TRAPS SEDIMENT ON THE SURFACE AND ALLOWS WATER TO FLOW THROUGH THE GRATE. CONSIDERATIONS SUCH AS WEATHER CONDITIONS, SLOPES, TRIBUTARY WATERSHED AREA AND EXPECTED SEDIMENT ACCUMULATION SHOULD BE FACTORED INTO MAKING A DECISION ON ANY PARTICULAR PRODUCT, AND THE MANUFACTURER'S RECOMMENDATIONS ON INSTALLATION AND MAINTENANCE SHALL BE STRICTLY ADHERED TO.

5. STABILIZED CONSTRUCTION EXIT

TO REDUCE THE TRACKING OF SEDIMENT ONTO ROADWAYS, A STABILIZED CONSTRUCTION EXIT SHALL BE INSTALLED AT ALL POINTS OF EGRESS WHERE VEHICLES MAY TRAVEL FROM THE PROJECT SITE TO A PUBLIC ROAD OR OTHER PAVED AREA. THE STONE PAD SHALL CONSIST OF A MINIMUM 6-INCH DEPTH OF 2-3 INCH CRUSHED STONE, AND SHALL BE PLACED ON A GEOTEXTILE FABRIC. THE PAD SHALL EXTEND AT LEAST 50 FEET INTO THE PROJECT SITE AND BE A MINIMUM OF 10 FEET WIDE. THE EXIT SHALL BE MAINTAINED IN A CONDITION THAT WILL PREVENT TRACKING OF SEDIMENT ONTO PUBLIC RIGHTS-OF-WAY, AND THE CONTRACTOR SHALL SWEEP OR WASH PAVEMENT AT EXITS THAT HAVE EXPERIENCED ANY MUD-TRACKING.

6. DUST CONTROL

THE CONTRACTOR IS RESPONSIBLE FOR CONTROLLING DUST ON THE PROJECT SITE AND ON ADJACENT ROADWAYS. EXPOSED SOIL SURFACES SHALL BE MOISTENED PERIODICALLY WITH ADEQUATE WATER TO CONTROL DUST. GRAVEL SURFACES SHALL EITHER BE TREATED WITH AN APPLICATION OF CALCIUM CHLORIDE OR COVERED WITH CRUSHED STONE IF DUST CONTROL BECOMES DIFFICULT WITH NORMAL WATER APPLICATIONS.

7. LAND GRADING AND SLOPE PREPARATION

GRADING SHALL BE PLANNED SO AS TO MINIMIZE THE LENGTH OF TIME BETWEEN INITIAL SOIL EXPOSURE AND FINAL GRADING. ON LARGE PROJECTS THIS SHOULD BE ACCOMPLISHED BY PHASING THE OPERATION AND COMPLETING THE FIRST PHASE UP TO FINAL GRADING AND SEEDING BEFORE STARTING THE NEXT PHASE. ANY EXPOSED AREA THAT WILL NOT BE FINISH GRADED WITHIN 14 DAYS SHALL BE TREATED WITH MULCH OR PLANTED WITH TEMPORARY VEGETATION. PROVISIONS SHALL BE MADE TO SAFELY CONVEY SURFACE RUNOFF TO STORM DRAINS, PROTECTED OUTLETS OR TO STABLE WATER COURSES TO ENSURE THAT SURFACE RUNOFF WILL NOT DAMAGE SLOPES OR OTHER GRADED AREAS. CUT AND FILL SLOPES THAT ARE TO BE STABILIZED WITH GRASS SHALL NOT BE STEEPER THAN 2:1. AREAS TO BE FILLED SHALL BE CLEARED, GRUBBED AND STRIPPED OF TOPSOIL TO REMOVE TREES, VEGETATION, ROOTS OR OTHER OBJECTIONABLE MATERIALS. AREAS SHALL BE SCARIFIED TO A MINIMUM DEPTH OF 3 INCHES PRIOR TO PLACEMENT OF TOPSOIL. ALL FILLS SHALL BE COMPACTED AS REQUIRED TO REDUCE EROSION, SLIPPAGE, SETTLEMENT, SUBSIDENCE OR OTHER RELATED PROBLEMS. FILL INTENDED TO SUPPORT BUILDINGS, STRUCTURES AND CONDUITS, ETC. SHALL BE COMPACTED IN ACCORDANCE WITH LOCAL REQUIREMENTS OR CODES. ALL FILLS SHALL BE PLACED AND COMPACTED IN LAYERS NOT TO EXCEED 8 INCHES IN THICKNESS. FILL MATERIAL SHALL BE FREE OF STUMPS, BUILDING DEBRIS AND OTHER OBJECTIONABLE MATERIALS THAT WOULD INTERFERE WITH OR PREVENT CONSTRUCTION OF SATISFACTORY LIFTS. FROZEN MATERIAL OR SOFT, MUCKY OR HIGHLY COMPRESSIBLE MATERIALS SHALL NOT BE INCORPORATED INTO FILL SLOPES OR STRUCTURAL FILLS. FILL SHALL NOT BE PLACED ON A FROZEN FOUNDATION. SEEPS OR SPRINGS ENCOUNTERED DURING CONSTRUCTION SHALL BE HANDLED APPROPRIATELY. ALL GRADED AREAS SHALL BE PERMANENTLY STABILIZED IMMEDIATELY FOLLOWING FINISHED GRADING.

8. TOPSOIL

IF POSSIBLE, TOPSOIL SHALL BE STOCKPILED ON THE PROJECT SITE AND REUSED. HIGH QUALITY TOPSOIL SHALL BE FRIABLE AND LOAMY (LOAM, SANDY LOAM, SILT LOAM, SANDY CLAY LOAM, CLAY LOAM), AND SHALL BE FREE OF DEBRIS, TRASH, STUMPS, ROCKS, ROOTS AND NOXIOUS WEEKS. AFTER THE AREAS TO BE TOPSOILED HAVE BEEN BROUGHT TO GRADE, AND IMMEDIATELY PRIOR TO SPREADING THE TOPSOIL, THE SUBGRADE SHALL BE LOOSENED BY SCARIFYING TO A DEPTH OF AT LEAST 2 INCHES TO ENSURE BONDING WITH SUBSOIL. THE TOPSOIL SHALL BE UNIFORMLY DISTRIBUTED TO A MINIMUM COMPACTED DEPTH OF 4 INCHES. ANY IRREGULARITIES IN THE SURFACE RESULTING FROM TOPSOILING OR OTHER OPERATIONS SHALL BE CORRECTED IN ORDER TO PREVENT THE FORMATION OF DEPRESSIONS OR WATER POCKETS. IT IS NECESSARY TO COMPACT THE TOPSOIL ENOUGH TO ENSURE GOOD CONTACT WITH THE UNDERLYING SOIL, BUT UNDUE COMPACTION IS TO BE AVOIDED.

9. PERMANENT VEGETATION

TO PREPARE THE SEEDBED, APPLY 10-20-20 FERTILIZER AT A RATE OF 800 POUNDS PER ACRE AND GROUND LIMESTONE AT A RATE OF 3 TONS PER ACRE. WORK THE FERTILIZER AND LIMESTONE INTO THE TOPSOIL TO A DEPTH OF 4 INCHES AND REMOVE ANY STONES, ROOTS OR OTHER VISIBLE DEBRIS. SELECT A SEED MIXTURE THAT IS APPROPRIATE FOR THE SOIL TYPE AND MOISTURE CONTENT AS FOUND AT THE SITE, AND FOR THE AMOUNT OF SUN EXPOSURE AND FOR LEVEL OF USE. REFER TO THE USDA SOIL CONSERVATION SERVICE OR THE LOCAL SOIL AND WATER CONSERVATION DISTRICT FOR SUITABLE SEED MIXTURES. APPLY SEED UNIFORMLY IN ACCORDANCE WITH SUPPLIER RECOMMENDATIONS AND IMMEDIATELY COVER WITH MULCH AS DESCRIBED IN THE TEMPORARY MULCHING SECTION OF THIS PLAN.

HYDROSEEDING SHALL BE DONE IN ACCORDANCE WITH SUPPLIERS RECOMMENDATIONS.

SOD STRIPS SHALL BE LAID AT RIGHT ANGLES TO DIRECTION OF SLOPE OR FLOW OF WATER STARTING AT LOWEST ELEVATION. JOINTS SHALL BE STAGGERED, AND ALL STRIPS SHALL BE ROLLED OR TAMPED INTO PLACE. ON SLOPES, SOD SHALL BE ANCHORED WITH STAPLES, WIRE OR PINS. IRRIGATE SODDED AREA IMMEDIATELY AFTER INSTALLATION.

10. PERMANENT MULCHING

PERMANENT MULCH IS A LONG TERM COVER THAT PROVIDES A GOOD BUFFER AROUND DISTURBED AREAS. THE EROSION CONTROL MIX SHALL CONSIST PRIMARILY OF ORGANIC MATERIAL AND MAY INCLUDE SHREDDED BARK, STUMP GRINDINGS OR COMPOSTED BARK. WOOD CHIPS, GROUND CONSTRUCTION DEBRIS, REPROCESSED WOOD PRODUCTS OR BARK CHIPS ARE NOT ACCEPTABLE. THE EROSION CONTROL MIX SHALL CONTAIN A WELL-GRADED MIXTURE OF PARTICLE SIZES AND MAY CONTAIN ROCKS LESS THAN 4 INCHES IN DIAMETER. EROSION CONTROL MIX MUST BE FREE OF REFUSE, PHYSICAL CONTAINMANTS AND MATERIAL TOXIC TO PLANT GROWTH.

11. RIPRAP SLOPE STABILIZATION

RIPRAP STONE SHALL CONSIST OF SUB-ANGULAR FIELD STONE OR ROUGH UNHEWN QUARRY STONE OF APPROXIMATELY RECTANGULAR SHAPE. THE DEPTH OF STONE SHALL BE A MINIMUM OF 2.2 TIMES THE MAXIMUM STONE DIAMETER. A GRAVEL OR GEOTEXTILE FILTER BLANKET SHALL BE PLACED BETWEEN THE RIPRAP AND UNDERLYING SOIL SURFACE. GRAVEL FILTER BLANKETS SHALL MEET MDOT TYPE-C UNDERDRAIN MATERIAL SPECIFICATIONS AND BE AT LEAST 6 INCHES THICK. GEOTEXTILE FILTER BLANKETS SHALL BE SPECIFIED BASED ON SITE CONDITIONS. RIPRAP SLOPES SHALL BE TOED INTO THE BASE OF THE EMBANKMENT BY EXCAVATING A TRENCH AT THE BOTTOM OF THE SLOPE AND INSTALLING A STABLE BASE OF RIPRAP TO GRADE.

WINTER EROSION AND SEDIMENTATION CONTROL NOTES:

THE WINTER CONSTRUCTION PERIOD TYPICALLY BEGINS IN EARLY NOVEMBER AND ENDS IN MID APRIL. IF A CONSTRUCTION SITE IS NOT STABILIZED WITH PAVEMENT, A ROAD GRAVEL BASE, 75% MATURE VEGETATION COVER OR RIPRAP BY NOVEMBER 15 THEN THE SITE NEEDS TO BE PROTECTED WITH OVER-WINTER STABILIZATION. WINTER EXCAVATION AND EARTHWORK SHALL BE COMPLETED SUCH THAT NO MORE THAN 1 ACRE OF THE SITE IS WITHOUT STABILIZATION AT ANY ONE TIME. LIMIT THE EXPOSED AREA TO THOSE AREAS IN WHICH WORK IS TO OCCUR DURING THE FOLLOWING 15 DAYS AND THAT CAN BE MULCHED IN ONE DAY PRIOR TO ANY SNOW EVENT. AN AREA SHALL BE CONSIDERED DENUDED UNTIL THE SUBBASE GRAVEL IS INSTALLED IN THE ROADWAY AREAS OR THE AREAS OF FUTURE LOAM AND SEED HAVE BEEN LOAMED, SEEDED AND MULCHED. A COVER OF EROSION CONTROL MIX IS THE PREFERRED TEMPORARY MULCH DURING WINTER CONDITIONS.

1. NATURAL RESOURCE PROTECTION

ANY AREAS WITHIN 100 FEET FROM ANY REGULATED NATURAL RESOURCES, IF NOT STABILIZED WITH A MINIMUM OF 75% MATURE VEGETATION CATCH, SHALL BE MULCHED BY DECEMBER 1 AND ANCHORED WITH PLASTIC NETTING OR PROTECTED WITH AN EROSION CONTROL COVER. DURING WINTER CONSTRUCTION, A DOUBLE ROW OF SEDIMENT BARRIERS (FOR EXAMPLE, SILT FENCE BACKED WITH HAY BALES OR EROSION CONTROL MIX) WILL BE PLACED BETWEEN ANY REGULATED NATURAL RESOURCE AND THE DISTURBED AREA. PROJECTS CROSSING THE REGULATED NATURAL RESOURCE SHALL BE PROTECTED A MINIMUM DISTANCE OF 100 FEET ON EITHER SIDE FROM THE RESOURCE. EXISTING PROJECTS NOT STABILIZED BY DECEMBER 1 SHALL BE PROTECTED WITH THE SECOND LINE OF SEDIMENT BARRIER TO ENSURE FUNCTIONALITY DURING THE SPRING THAW AND RAINS.

2. SEDIMENT BARRIERS

DURING FROZEN CONDITIONS, SEDIMENT BARRIERS MAY CONSIST OF EROSION CONTROL MIX BERMS OR ANY OTHER RECOGNIZED SEDIMENT BARRIERS AS FROZEN SOIL PREVENTS THE PROPER INSTALLATION OF HAY BALES OR SILT FENCES.

3. MULCHING

ALL AREAS SHALL BE CONSIDERED TO BE DENUDED UNTIL SEEDED AND MULCHED. HAY AND STRAY MULCH SHALL BE APPLIED AT A RATE OF 3 TONS PER ACRE (TWICE THE NORMAL ACCEPTED RATE) AND SHALL BE PROPERLY ANCHORED. EROSION CONTROL MIX MUST BE APPLIED WITH A MINIMUM 4 INCHES THICKNESS. MULCH SHALL NOT BE SPREAD ON TOP OF SNOW. SNOW MUST BE REMOVED DOWN TO A ONE-INCH DEPTH PRIOR TO APPLICATION. AFTER EACH DAY OF FINAL GRADING, THE AREA WILL BE PROPERTY STABILIZED WITH ANCHORED HAY OR STRAW OR EROSION CONTROL MATTING. AN AREA SHALL BE CONSIDERED TO HAVE BEEN STABILIZED WHEN EXPOSED SURFACES HAVE BEEN EITHER MULCHED OR ADEQUATELY ANCHORED SO THAT GROUND SURFACE IS NOT VISIBLE THROUGH THE MULCH. BETWEEN THE DATES OF NOVEMBER 1 AND APRIL 15, ALL MULCH SHALL BE ANCHORED BY EITHER MULCH NETTING, ASPHALT EMULSION CHEMICAL, TRACKING OR WOOD CELLULOSE FIBER. THE COVER WILL BE CONSIDERED SUFFICIENT WITH THE GROUND SURFACE IS NOT VISIBLE THROUGH THE MULCH. AFTER NOVEMBER 1ST, MULCH AND ANCHORING OF ALL EXPOSED SOIL SHALL OCCUR AT THE END OF EACH FINAL GRADING WORKDAY.

4. SOIL STOCKPILING

STOCKPILES OF SOIL OR SUBSOIL WILL BE MULCHED FOR OVER WINTER PROTECTION WITH HAY OR STRAW AT TWICE THE NORMAL RAT EOR WITH A FOUR-INCH LAYER OF EROSION CONTROL MIX. THIS WILL BE DONE WITHIN 24 HOURS OF STACKING AND RE-ESTABLISHED PRIOR TO ANY RAINFALL OR SNOWFALL. ANY SOIL STOCKPILE WILL NOT BE PLACED WITHIN 100 FEET FROM ANY REGULATED NATURAL RESOURCE.

5. SEEDING

BETWEEN THE DATES OF OCTOBER 15 AND APRIL 1, LOAM OR SEED WILL NOT BE REQUIRED. DURING PERIODS OF ABOVE FREEZING TEMPERATURES FINISHED AREAS SHALL BE FINE GRADED AND EITHER PROTECTED MULCH OR TEMPORARILY SEEDED AND MULCHED UNTIL SUCH TIME AS THE FINAL TREATMENT CAN BE APPLIED. IF THE DATE IS AFTER NOVEMBER 1 AND IF THE EXPOSED AREA HAS BEEN LOOMED, FINAL GRADED WITH A UNIFORM SURFACE, THEN THE AREA MAY BE DORMANT SEEDED AT A RATE OF 3 TIMES HIGHER THAN SPECIFIED FOR PERMANENT SEED AND THEN MULCHED. IF DORMANT SEEDING IS USED, ALL DISTURBED AREAS SHALL RECEIVE 4 INCHES OF LOAM AND SEED AT AN APPLICATION RATE OF 5 LBS PER 1,000 S.F. ALL AREAS INSUFFICIENTLY VEGETATED (LESS THAN 75%) IN THE SPRING SHALL BE REVEGETATED.

6. OVER-WINTER STABILIZATION OF DITCHES AND CHANNELS

ALL STONE-LINED DITCHES AND CHANNELS MUST BE CONSTRUCTED BY NOVEMBER 15. ALL GRASS-LINED DITCHES AND CHANNELS MUST BE CONSTRUCTED AND STABILIZED BY SEPTEMBER 1. IF A GRASS-LINED DITCH OR CHANNEL IS STABILIZED BY SEPTEMBER 1, THEN EITHER A SOD LINING SHALL BE INSTALLED PRIOR TO OCTOBER 1 OR THE DITCH MUST BE LINED WITH STONE RIPRAP PRIOR TO NOVEMBER 15.

7. OVER-WINTER STABILIZATION OF DISTURBED SLOPES

ALL STONE-COVERED SLOPES MUST BE CONSTRUCTED AND STABILIZED BY NOVEMBER 15. ALL SLOPES TO BE VEGETATED MUST BE SEEDED AND MULCHED BY SEPTEMBER 1. ALL AREAS HAVING A GRADE STEEPER THAN 15% SHALL BE CONSIDERED A SLOPE. IF A SLOPE TO BE VEGETATED IS NOT STABILIZED BY SEPTEMBER 1, THEN THE SLOPE SHALL EITHER BE STABILIZED WITH TEMPORARY VEGETATION AND EROSION CONTROL MATS BY OCTOBER 1, SOD BY OCTOBER 1, EROSION CONTROL MIX BY NOVEMBER 15 OR STONE RIPRAP BY NOVEMBER 15. SEE APPLICABLE SECTIONS UNDER EROSION AND SEDIMENTATION CONTROL NOTES FOR PROPER INSTALLATION METHODS.

8. OVER-WINTER STABILIZATION OF DISTURBED SOILS

BY SEPTEMBER 15, ALL DISTURBED SOILS ON AREAS HAVING A SLOPE LESS THAN 15% MUST BE SEEDED AND MULCHED. IF THE DISTURBED AREAS ARE NOT STABILIZED BY THIS DATE, THEN THE AREA SHALL EITHER BE STABILIZED WITH TEMPORARY VEGETATION BY OCTOBER 1, SOD BY OCTOBER 1, OR MULCH BY NOVEMBER 15. SEE APPLICABLE SECTIONS UNDER EROSION AND SEDIMENTATION CONTROL NOTES FOR PROPER INSTALLATION METHODS.

9. MAINTENANCE

MAINTENANCE MEASURES SHALL BE APPLIED AS NEEDED DURING THE ENTIRE CONSTRUCTION SEASON. AFTER EACH RAINFALL, SNOW STORM OR PERIOD OF THAWING AND RUNOFF, THE SITE CONTRACTOR SHALL PERFORM A VISUAL INSPECTION OF ALL INSTALLED EROSION CONTROL MEASURES AND PERFORM REPAIRS AS NEEDED TO INSURE THEIR CONTINUOUS FUNCTION. FOLLOWING THE TEMPORARY AND/OR FINAL SEEDING AND MULCHING, THE CONTRACTOR SHALL, IN THE SPRING, INSPECT AND REPAIR ANY DAMAGES AND/OR BARE SPOTS. AN ESTABLISHED VEGETATIVE COVER MEANS A MINIMUM OF 85% OF AREAS VEGETATED WITH VIGOROUS GROWTH.

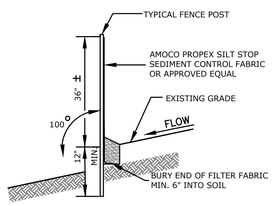

20. SEDIMENT FILTER FENCE (GSF)
NOT TO SCALE

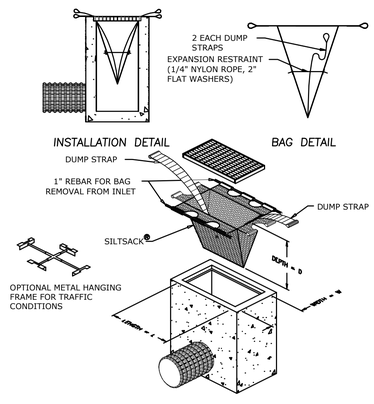

21. INLET PROTECTION (IP)
NOT TO SCALE

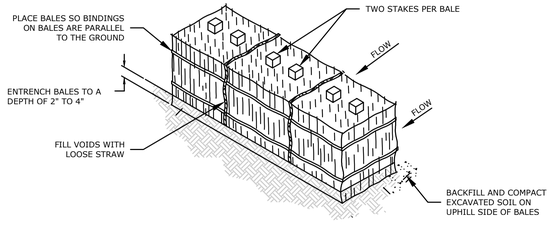

1. IDEALLY, BALES SHOULD BE ENTRENCHED 2 TO 4 INCHES AND TIGHTLY BUTTED TOGETHER. BALES CAN BE SUCCESSFULLY PLACED WITHOUT A TRENCH IF GOOD GROUND CONTACT IS MADE. REMOVE HEAVY BRUSH AND FILL ALL VOIDS WITH LOOSE STRAW.
2. BALES SHALL BE ONLY USED AS A TEMPORARY BARRIER AND FOR NO LONGER THAN 60 DAYS.
3. WHEN SEDIMENTATION DEPOSITS REACH WITHIN 3" OF THE TOP OF BALES, REMOVE SEDIMENTATION OR ADD ADDITIONAL BALES ON SEDIMENTATION DIRECTLY BEHIND FIRST ROW OF BALES AS DIRECTED BY THE ENGINEER.
4. UPON ESTABLISHMENT OF GROUND COVER ON DISTURBED AREAS AND WHEN DIRECTED BY THE ENGINEER, HAY BALES WILL BE RELOCATED AND USED AS MULCH. ANY SEDIMENTATION WILL BE THINLY SPREAD UPON ESTABLISHED GROUND COVER.

22. STAKED HAYBALES (HB)
NOT TO SCALE

STATE OF MAINE JOHN QUENTIN ADAMS No. 9053 PROFESSIONAL ENGINEER

MILONE & MACBROOM®
121 Middle Street
Suite 201
Portland, Maine 04101
(207) 541-9544 Fax (207) 541-9548
www.miloneandmacbroom.com

DESCRIPTION	DATE	BY

EROSION & SEDIMENT CONTROL NOTES AND DETAILS

AUTOZONE STORE NO. 3879
PORTLAND, MAINE
1207 FOREST AVE
PORTLAND, MAINE

SMW	SMW	JQA
DESIGNED	DRAWN	CHECKED

SCALE: NTS
DATE: MARCH 16, 2016
PROJECT NO.: 5464-04
SHEET NO.: 8 OF 12
SHEET NAME: C1.C

Copyright Milone & MacBroom, Inc - 2016