® COPYRIGHT 2007

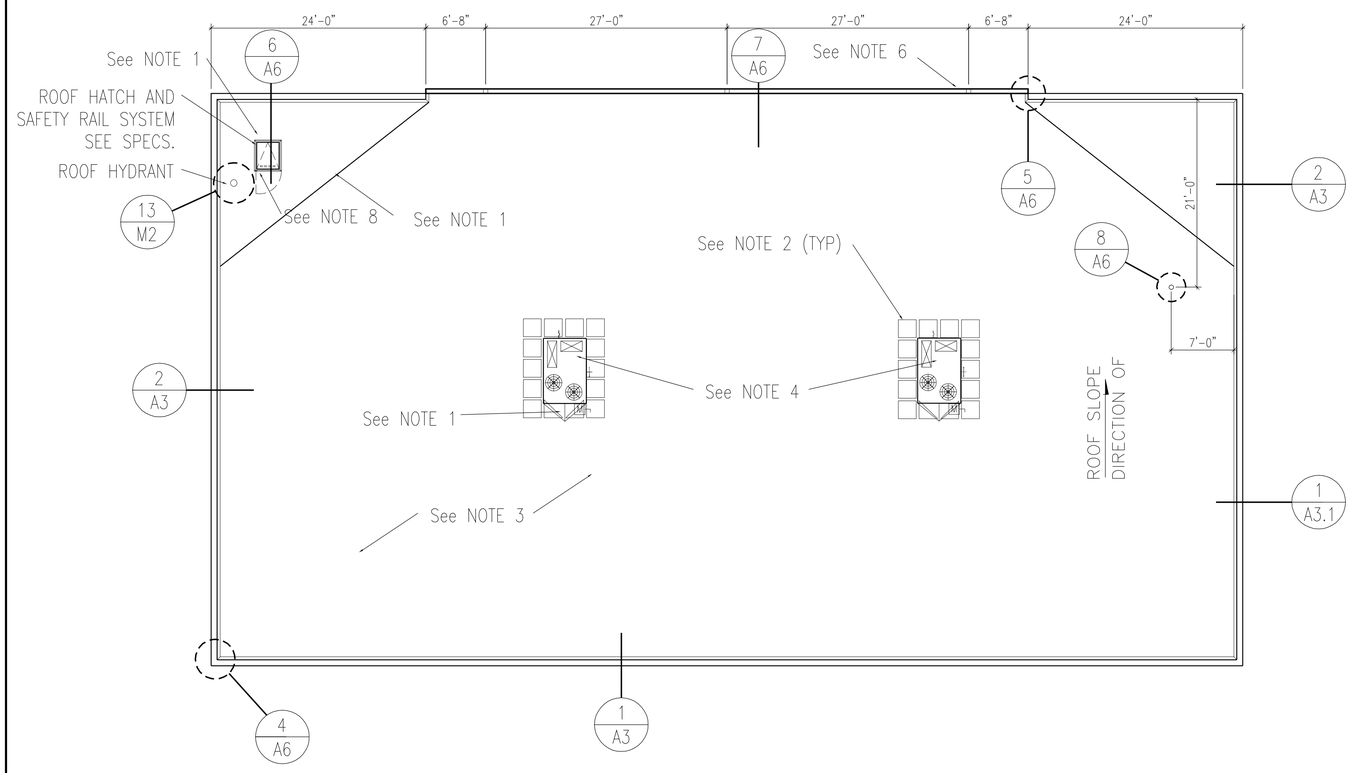

1/8" = 1'-0"

1 ROOF PLAN

1. ALL CRICKETS TO BE 3" HIGH AT THE CENTER AND LOCATED AT THE HIGH SIDE OF ANY ROOF OPENING. SLOPE DOWNWARD TO EDGE OF ROOF OPENINGS OR DRAINS.

2. ALL ROOF WALKPADS (24" X 24") ARE TO BE WITHIN 2" OF THE VERTICAL FACES OF THE ROOFTOP UNIT. SPACING BETWEEN THE PADS IS TO BE 6".

3. REFER TO SPECIFICATIONS FOR SMOOTH SURFACE ROOFING SYSTEM, PROVIDE CONTINUOUS 4" FIBER CANT STRIP AT VERTICAL INTERSECTIONS IF REQUIRED BY ROOFING SYSTEM.

4. REFER TO STRUCTURAL DRAWINGS FOR ROOF FRAMING PLAN TO DETERMINE LOCATION OF ROOF TOP UNITS (RTU).

5. HVAC ROOF CURBS SHALL BE FURNISHED BY OWNER AND INSTALLED BY CONTRACTOR. CONTRACTOR SHALL PROVIDE ALL FLASHING.

6. SEAMLESS ALUMINUM 5" GUTTER AND 4"x6"DOWNSPOUT.

7. CONNECT DOWNSPOUTS TO UNDERGROUND DRAINAGE SYSTEM OR IF NONE AVAILABLE, PROVIDE SPLASH BLOCKS WITH POSITIVE DRAINAGE AWAY FROM BUILDING.

8. ROOF HATCH WITH LADDER BELOW.

1/4" = 1'-0" ARN01

2 ROOF PLAN NOTES

TOTAL ROOF AREA = 7200 SQ. FT.
ROOF SLOPE = 3 PERCENT
DESIGN RAINFALL = 5 INCHES PER HOUR
SEAMLESS 5" GUTTER IS RECTANGULAR WITH AN AREA OF 20 SQ. IN. AND IS EQUIVALENT TO A 6" DIAMETER PIPE WITH AN AREA OF 18.85 SQ. IN. MAXIMUM HORIZONTAL PROJECTED ROOF AREA FOR THIS GUTTER IS 7310 SQ. FT.
DIMENSIONS OF DOWNSPOUTS ARE 4" x 6" WITH AN AREA OF 24 SQ. IN. AND IS EQUIVALENT TO A 5" DIAMETER PIPE WITH AN AREA OF 19.64 SQ. IN. MAXIMUM ALLOWABLE ROOF AREA FOR THIS DOWNSPOUT IS 6920 SQ. FT.

MINIMUM NUMBER OF DOWNSPOUTS REQUIRED IS 7200 / 6920 OR 1.1, THREE ARE PROVIDED WITH THE GUTTER.

1/2" = 1'-0" ARN27N2

3 RAINWATER CALCULATIONS

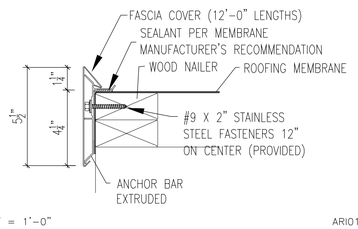

3" = 1'-0" ARI01

4 ROOF EDGE DETAIL

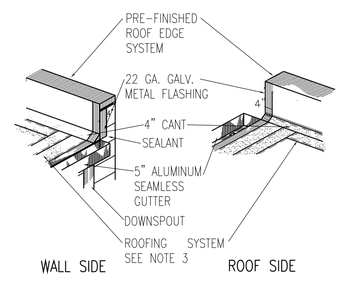

3/8" = 1'-0" ARI03

5 ROOF AT GUTTER

NOTE: LADDER IS TO COMPLY WITH ALL REQUIREMENTS OF OSHA 1910.27

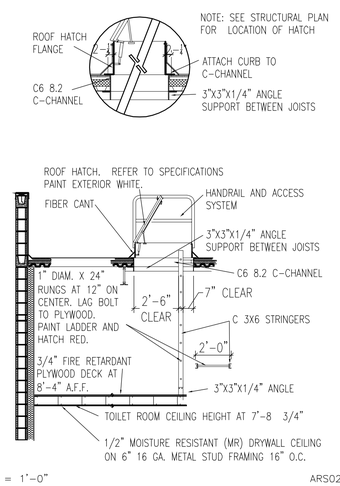

1/4" = 1'-0" ARS02

6 ROOF HATCH DETAIL

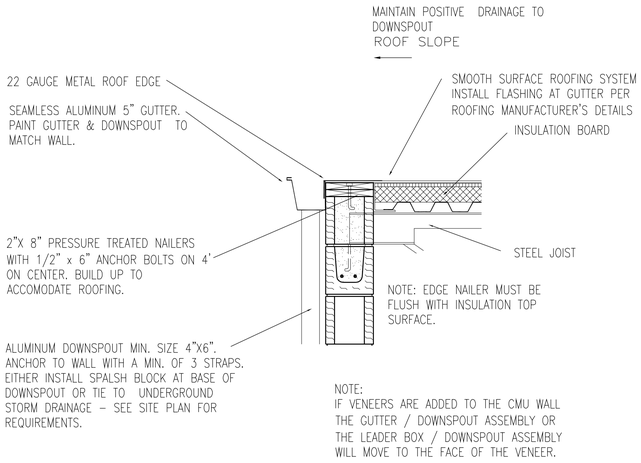

1" = 1'-0" ARS01

7 ROOF EDGE DETAIL AT LOW SIDE

NOTE: FILL PIPE OPENING W/ FOAM AFTER BOTH CABLES HAVE BEEN INSTALLED.

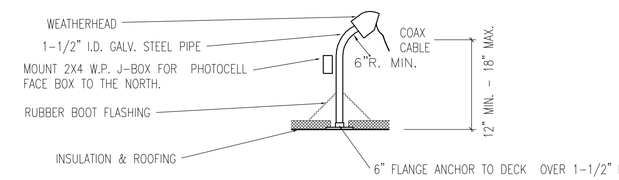

3/4" = 1'-0" ARS03

8 SATELLITE COAX

REVISIONS	
1	4
2	5
3	6

AutoZone Store No. 3879
1207 FOREST AVE
PORTLAND
ME 04103

ROOF PLAN / DETAILS

ARCHITECTURAL GROUP INTERNATIONAL
15 West Seventh Street, Covington, KY 41011
P: 859.261.5400 F: 859.261.5530
www.agi-usa.com
designing where you want to

LICENSED ARCHITECT TIMOTHY B. SEMAN No. 3053 STATE OF MAINE

04/04/16

7N2-R

A-6