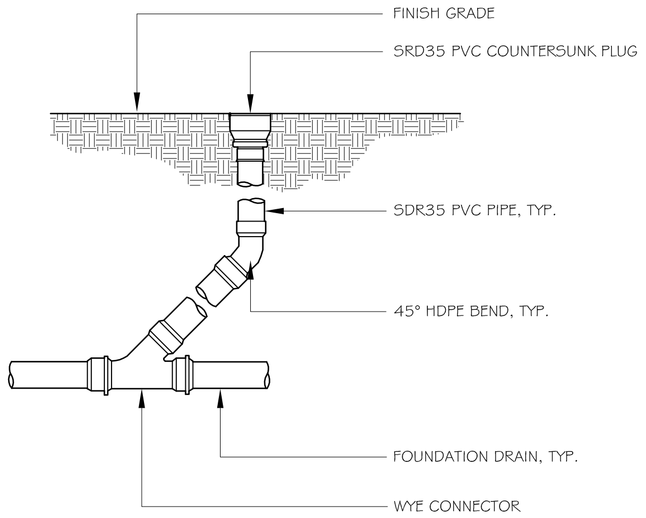

1 CLEANOUT DETAIL
NOT TO SCALE

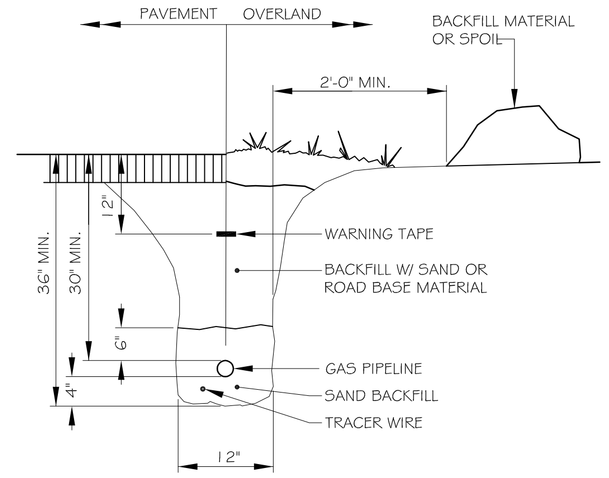

2 GAS PIPING TRENCH SECTION
NOT TO SCALE

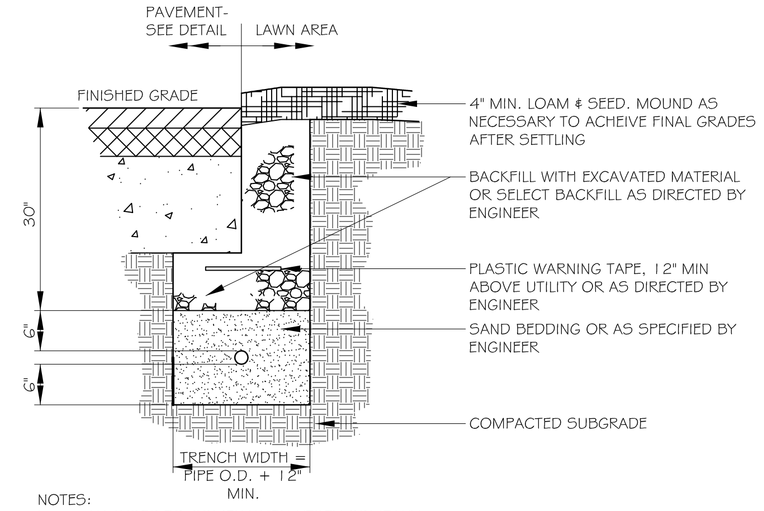

NOTES:
1. ALL WORK TO COMPLY WITH UTILTY COMPANY STANDARDS.
2. CONTRACTOR TO PROVIDE $\frac{1}{4}$" POLYPROPYLENE PULL ROPES IN ALL CONDUITS.

3 ELECTRIC UTILITY TRENCH SECTION
NOT TO SCALE

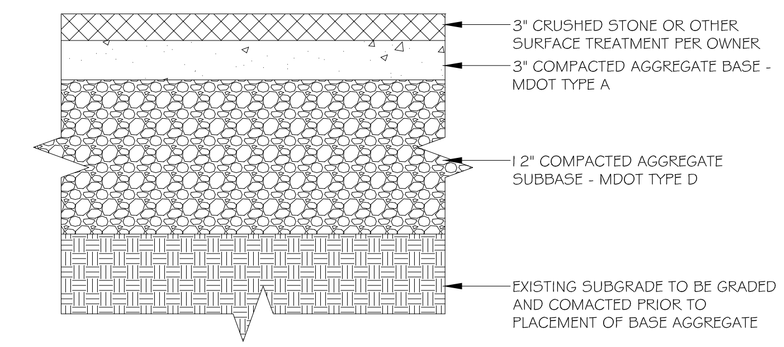

4 DRIVEWAY DETAIL
NOT TO SCALE

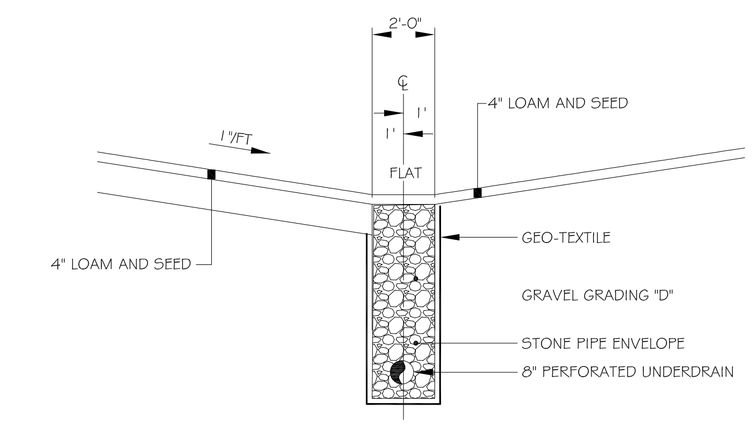

NOTE:
1. 8" UNDERDRAIN HOLES UP

5 STONE INFILTRATION BED
NOT TO SCALE

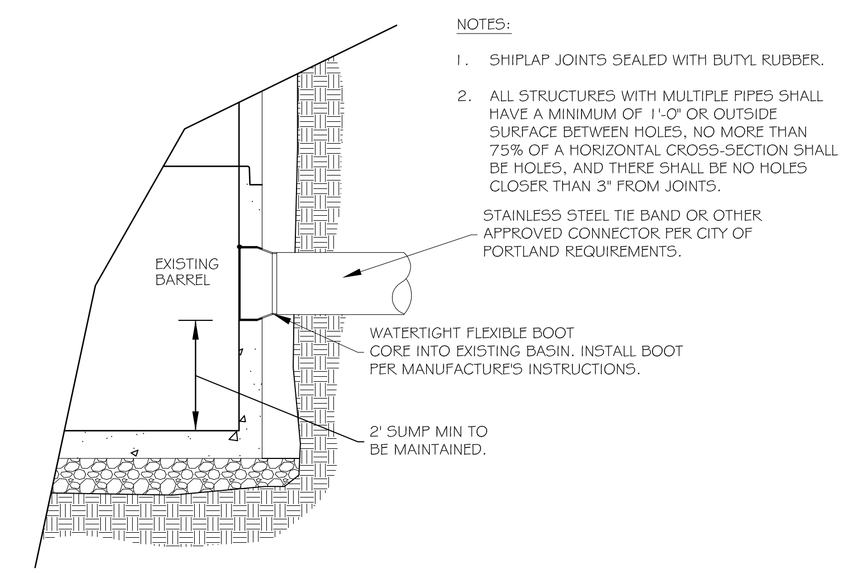

NOTES:
1. SHIPLAP JOINTS SEALED WITH BUTYL RUBBER.
2. ALL STRUCTURES WITH MULTIPLE PIPES SHALL HAVE A MINIMUM OF 1'-0" OR OUTSIDE SURFACE BETWEEN HOLES, NO MORE THAN 75% OF A HORIZONTAL CROSS-SECTION SHALL BE HOLES, AND THERE SHALL BE NO HOLES CLOSER THAN 3" FROM JOINTS.

6 CORE INTO EXISTING CATCH BASIN
NOT TO SCALE

DATE: AUGUST 2009
REVISED:

NOTES:
DEPTH OF BITUMINOUS PAVEMENT AND AGGREGATE COURSES SHALL BE DETERMINED BY STREET CLASSIFICATION.

ANY ALTERNATE TRENCHING OR PAYMENT METHODS SHALL BE APPROVED IN ADVANCE BY THE CITY OF PORTLAND, DEPARTMENT OF PUBLIC SERVICES.

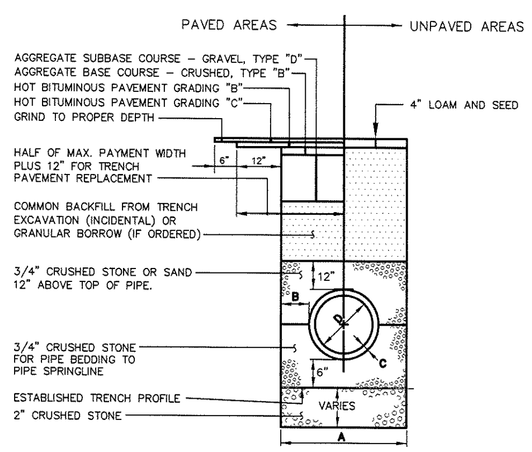

TYPICAL PIPE TRENCH INSTALLATION
NOT TO SCALE

NOTES

1. ALTERNATIVE CONSTRUCTION METHODS OR PAYMENT METHODS SHALL BE APPROVED IN ADVANCE BY THE CITY.
2. IN PAVED AREAS, DEPTHS OF GRAVEL AND HOT MIX ASPHALT PAVEMENT SHALL MATCH THE GREATER OF EXISTING CONDITIONS OR THE REQUIREMENTS FOR THE CORRESPONDING STREET CLASSIFICATION.
3. DIMENSION **B** SHALL BE SUFFICIENT TO ALLOW CRUSHED STONE BEDDING TO BE PLACED AND COMPACTED UNDER THE HAUNCHES OF THE PIPE; BUT IN ALL CASES DIMENSION **B** SHALL BE AT LEAST 9".
4. DIMENSION **A** IS THE MAXIMUM WIDTH ALLOWED FOR CALCULATING PAY QUANTITIES UNDER GRANULAR BORROW, CRUSHED STONE, STRUCTURAL EARTH EXCAVATION, AND STRUCTURAL ROCK EXCAVATION. DIMENSION **A** SHALL BE BASED ON PIPE DIAMETER **D**, AS SET FORTH IN THE FOLLOWING TABLE.

PIPE DIAMETER, **D** (INCHES)	MAX. TRENCH WIDTH, **A** (FEET)
4	4.0
6	4.0
8	4.0
10	4.0
12	5.0
15	5.0
18	5.0
21	5.0
24	6.0
27	6.0
30	6.0
36	6.0
42	7.0
48	7.0

TYPICAL PIPE INSTALLATION – NOTES
NOT TO SCALE

CITY OF PORTLAND, MAINE
TECHNICAL STANDARDS MANUAL
SANITARY SEWER AND STORM DRAIN DESIGN STANDARDS
SECTION II
TYPICAL PIPE TRENCH INSTALLATION AND NOTES
FIGURE: II-12
96

City of Portland Technical Manual
Section 2 - Sanitary Sewer and Storm Drain
Adopted 7/18/10, Rev. 6/17/11

NYLOPLAST DRAIN BASIN WITH DOME GRATE

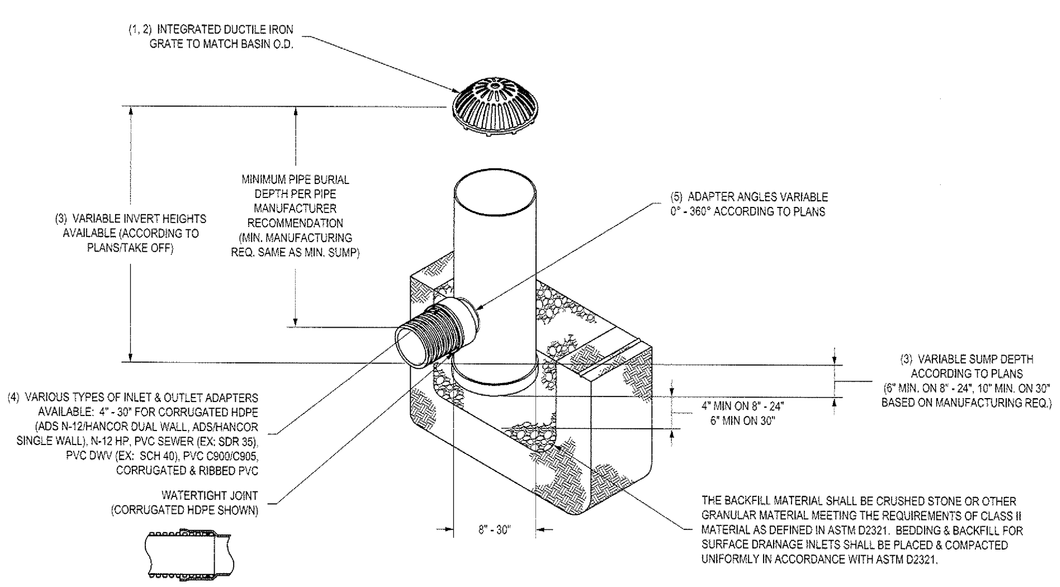

1 - 8" - 30" DOME GRATES SHALL BE DUCTILE IRON PER ASTM A536 GRADE 70-50-05.
2 - 8" & 10" DOME GRATES FIT ONTO THE DRAIN BASINS WITH THE USE OF A PVC BODY TOP. SEE DRAWING NO. 7001-110-045.
3 - DRAIN BASIN TO BE CUSTOM MANUFACTURED ACCORDING TO PLAN DETAILS. RISERS ARE NEEDED FOR BASINS OVER 84" DUE TO SHIPPING RESTRICTIONS. SEE DRAWING NO. 7001-110-065.
4 - DRAINAGE CONNECTION STUB JOINT TIGHTNESS SHALL CONFORM TO ASTM D3212 FOR CORRUGATED HDPE (ADS N-12/HANCOR DUAL WALL), N-12 HP, & PVC SEWER (4" - 24").
5 - ADAPTERS CAN BE MOUNTED ON ANY ANGLE 0° TO 360°. TO DETERMINE MINIMUM ANGLE BETWEEN ADAPTERS SEE DRAWING NO. 7001-110-012.
6 - 8" - 30" DOME GRATES HAVE NO LOAD RATING.

THIS PRINT DISCLOSES SUBJECT MATTER IN WHICH NYLOPLAST HAS PROPRIETARY RIGHTS. THE RECIPIENT OR POSSESSION OF THIS PRINT DOES NOT CONVEY, TRANSFER, OR LICENSE THE USE OF THE DESIGN OR TECHNICAL INFORMATION SHOWN HEREIN. REPRODUCTION OF THIS PRINT OR ANY INFORMATION CONTAINED HEREIN, OR MANUFACTURE OF ANY ARTICLE HEREFROM FOR THE DISCLOSURE TO OTHERS IS FORBIDDEN, EXCEPT BY SPECIFIC WRITTEN PERMISSION FROM NYLOPLAST. ©2011 NYLOPLAST

DRAWN BY	EBC	MATERIAL	
DATE	3-25-10		
REVISED BY	EBC	PROJECT NO./NAME	
DATE	2-25-11		
DWG SIZE	A	SCALE 1:40	SHEET 1 OF 1

Nyloplast
3130 VERONA AVE
BUFORD, GA 30518
PHN (770) 932-2443
FAX (770) 932-2490
www.nyloplast-us.com

TITLE: DRAIN BASIN WITH DOME GRATE QUICK SPEC INSTALLATION DETAIL
DWG NO. 7001-110-397 REV B

STATE OF MAINE
JASON A. VAFIADES
No. 12661
LICENSED PROFESSIONAL ENGINEER
07/03/2014

REV.	DESCRIPTION	DR. BY	CKD. BY	APP. BY	DATE
A	REVISED PER CITY STAFF COMMENTS.	CAD	JAV	JAV	7/3/14

VED
VAFIADES ENGINEERING & DESIGN
MASTER PLANNING
SITE PLANNING
SITE DESIGN
PERMITTING
CONSTRUCTION SERVICES
STORMWATER INSPECTIONS
25 EAST VALENTINE, WESTBROOK, ME 04092 • (207) 266-5618

SILVER BEACH, LLC
17 WELLSTONE DRIVE
PORTLAND, MAINE 04103

SINGLE FAMILY RESIDENCE
83 WELLWOOD ROAD
PORTLAND, MAINE

CONSTRUCTION DETAILS

SCALE: NTS
DATE: 07-01-14
DES BY: JAV
DWN BY: CAD
CHK BY: JAV

PROJECT NO. 14-111
SHEET 3 OF 3

DRAWING NO. C-301