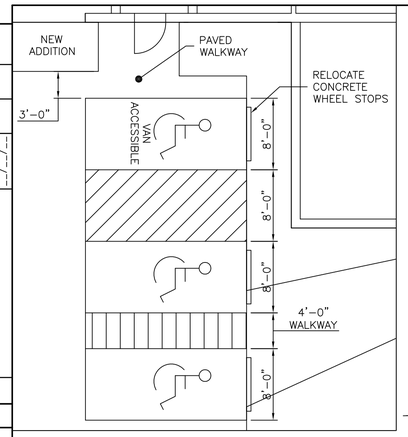

ADA PARKING DETAIL

SCALE: 1/8"=1'-0"

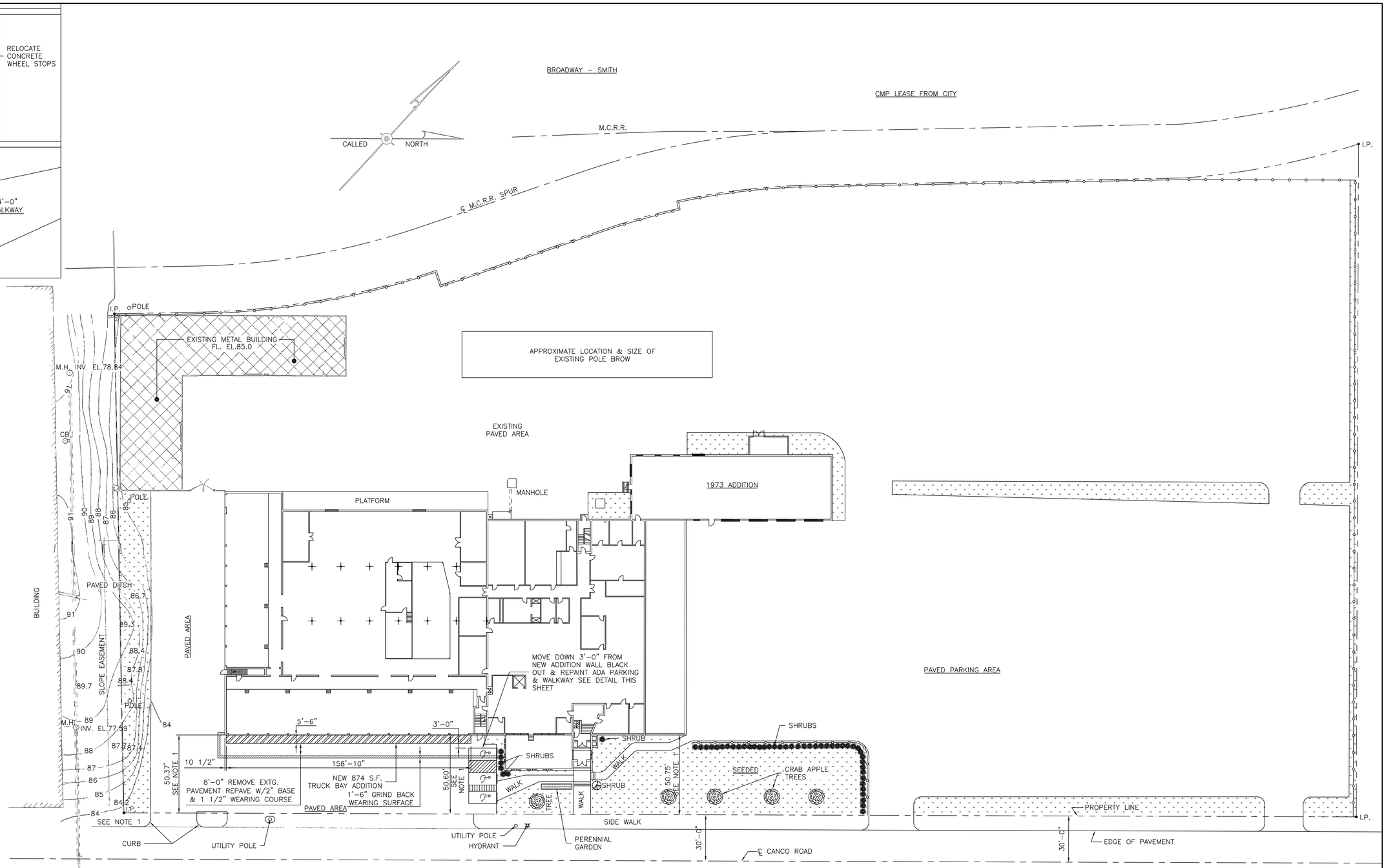

SITE PLAN

SCALE: 1"=30'-0"

NOTES:

1. PROPERTY LINE INFORMATION WAS OBTAINED FROM DRAWING 51–1256 "SITE PLAN – CABLE STORAGE BUILDING" DATED 4/26/73 & 51–120 "YARD PLAN – SERVICE BUILDING" REV. 5 DATED 1/31/73. DIMENSIONS FROM PROPERTY LINE TO BUILDING AS OBSERVED IN FIELD 1–30–73.
2. THE PROPERTY LINE & EXISTING SITE LAYOUT WAS COMPILED FROM SEVERAL EXISTING DRAWINGS. ENGINEER MAKES NO WARRANTIES ON THE ACCURACY OF THE PROPERTY LINES, EXISTING SITE LAYOUT OR LOCATION OF EXISTING SITE FEATURES

TOTAL SITE AREA = 308,640 SQ. FT.
EXISTING IMPERVIOUS AREA = 284,510 SQ. FT.
PROPOSED IMPERVIOUS AREA = 284,510 SQ. FT.
EXISTING PAVED AREA = 218,500 SQ. FT.
PROPOSED PAVED AREA = 217,626 SQ. FT.

This document and any attachments are considered:
BUSINESS CONFIDENTIAL
PROTECTED CRITICAL INFRASTRUCTURE INFORMATION

REFERENCE DRAWINGS

51–1256	SITE PLAN – CABLE STORAGE BUILDING
51–120	YARD PLAN – SERVICE BUILDING
742–60–002	2002 OIL/WATER INTERCEPTOR – SITE PLAN, SECTIONS & DETAILS

NO.	REVISION	DATE	BY	CK	P. E. STAMPED BY	P. E. No.
0	ISSUED FOR BID	07/11/11	JFB	DES	DES	

Professional Engineer Seal: STATE OF MAINE, DANIEL E SPAULDING No 6097, LICENSED PROFESSIONAL ENGINEER
07/11/11

DESIGNED DES
DRAWN JFB
CHECKED DES
APPROVED DES
REVIEWED

2011 EAST TRUCK BAY EXTENSION
SITE PLAN
PORTLAND SERVICE CENTER

CANCO ROAD, PORTLAND MAINE

CENTRAL MAINE POWER COMPANY
IBERDROLA USA Central Maine Power SYSTEM ENGINEERING
DATE: 03/11/2011
SCALE: AS NOTED

742–60–002
REV 0

SD-1

ENGINEERING CONSULTANT - LOGO - ADDRESS
SPAULDING ENGINEERING AND CONSTRUCTION SERVICES,INC.
24 COMMON STREET WATERVILLE, MAINE

THIS DRAWING SHALL BE REVISED ON THE CADD SYSTEM ONLY

NO.	REVISION	DATE	BY	CK	P.E.

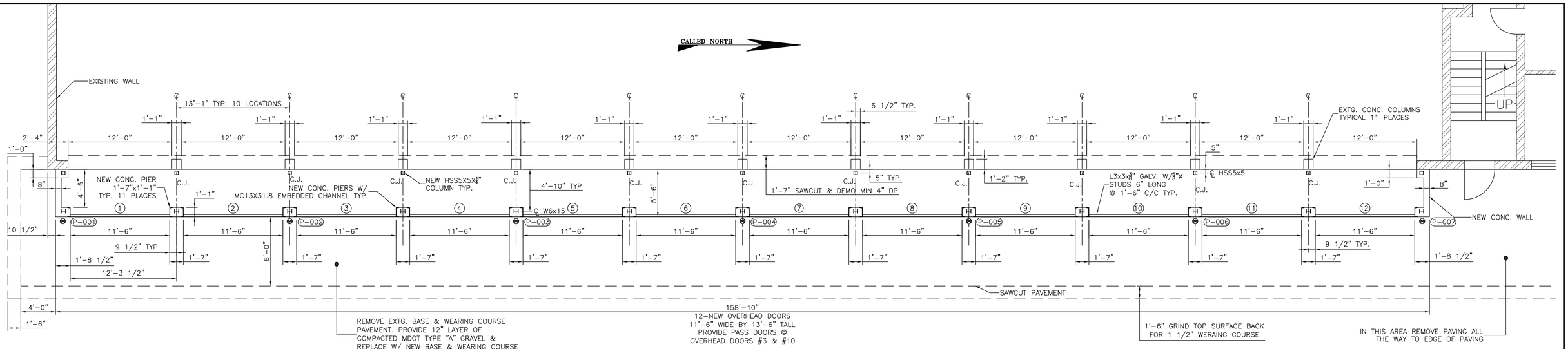

NEW TRUCK BAY ADDITION PLAN VIEW

SCALE: 3/16"=1'-0"

NOTE:
CENTERLINE OF NEW PIERS SHALL BE PLACED @ CENTERLINE OF EXISTING PIERS HOWEVER CLEAR DISTANCE BETWEEN NEW PIERS SHALL BE 11'-6". CONTRACTOR SHALL LAYOUT NEW PIERS PRIOR TO START OF ANY WORK & NOTIFY OWNER OF ANY DIMENSION DISCREPANCIES.

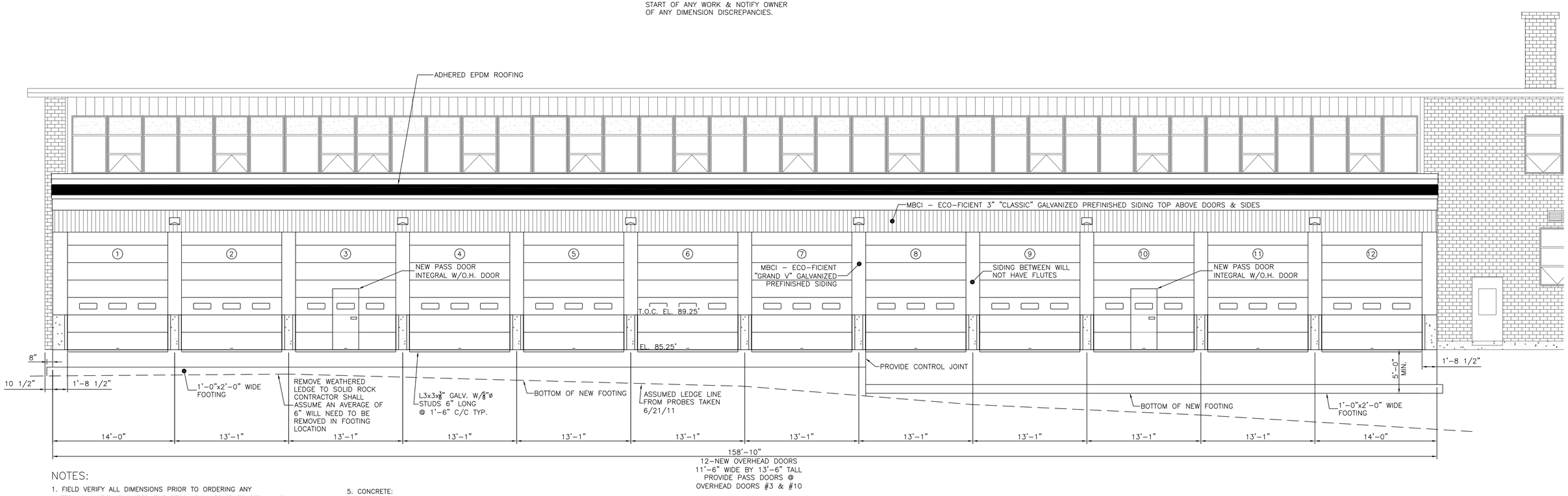

NEW TRUCK DOCK ADDITION EAST ELEVATION

SCALE: 3/16"=1'-0"

NOTES:

1. FIELD VERIFY ALL DIMENSIONS PRIOR TO ORDERING ANY MATERIALS. NOTIFY ENGINEER FOR RESOLUTION PRIOR TO BEGINNING ANY WORK.
2. NEW ADDITION ROOF DESIGN LOADS:
   SNOW LOAD = 50 PSF
   DRIFT SNOW LOAD = 58 PSF
   DEAD LOAD = 10 PSF
3. SHOP PRIME AND PAINT STRUCTURAL STEEL AS FOLLOWS:
   SURFACE PREP: SSPC-6 COMMERCIAL BLAST.
   PRIMER: ONE COAT DEVOE, CATHA-COAT 302H – REINFORCED INORGANIC ZINC PRIMER OR OWNER-APPROVED EQUAL. MINIMUM DFT = 2 MILS.
   TOP COAT: ONE COAT DEVOE, BAR RUST 235 MULTI-PURPOSE EPOXY COATING OR OWNER-APPROVED EQUAL. MINIMUM DFT = 4 MILS. COLOR BY OWNER.
4. ALL ELECTRICAL DEMOLITION & NEW CONSTRUCTION WILL BE BY OWNER'S ELECTRICAL CONTRACTOR
5. CONCRETE:
   f'c=4000 PSI
   SLUMP=2" TO 4" UNLESS SUPERPLASTICIZER IS USED
   MAX STONE SIZE=3/4"
   W/C RATIO=0.45
   AIR CONTENT%=6% +/- 1%
   COVER=3" UNLESS NOTED OTHERWISE
6. REINFORCING STEEL Fy=60,000 PSI

LEGEND

P-005 – TEST PROBES PERFORMED BY MAINE TEST BORINGS ON 6/21/11
C.J. – CONTROL JOINT

This document and any attachments are considered:
BUSINESS CONFIDENTIAL
PROTECTED CRITICAL INFRASTRUCTURE INFORMATION

REFERENCE DRAWINGS	
51-36	LEDGE PLOT PLAN

S-1

NO.	REVISION	DATE	BY	CK	P. E. STAMPED BY	P. E. No.
0	ISSUED FOR BID	07/11/11	JFB	DES	DES	6097

Professional Engineer Seal: STATE OF MAINE DANIEL E SPAULDING No 6097 LICENSED PROFESSIONAL ENGINEER 07/11/11

DESIGNED DES
DRAWN JFB
CHECKED DES
APPROVED DES
REVIEWED

2011 EAST TRUCK BAY EXTENSION PLAN & ELEVATION PORTLAND SERVICE CENTER

PORTLAND MAINE

CENTRAL MAINE POWER COMPANY
IBERDROLA USA Central Maine Power
SYSTEM ENGINEERING
DATE: 03/16/2011
SCALE: AS NOTED

742-64-001
REV 0

ENGINEERING CONSULTANT - LOGO - ADDRESS
SPAULDING ENGINEERING AND CONSTRUCTION SERVICES,INC.
24 COMMON STREET WATERVILLE, MAINE

THIS DRAWING SHALL BE REVISED ON THE CADD SYSTEM ONLY

NO.	REVISION	DATE	BY	CK	P.E.
		--/--/--			
		--/--/--			
		--/--/--			

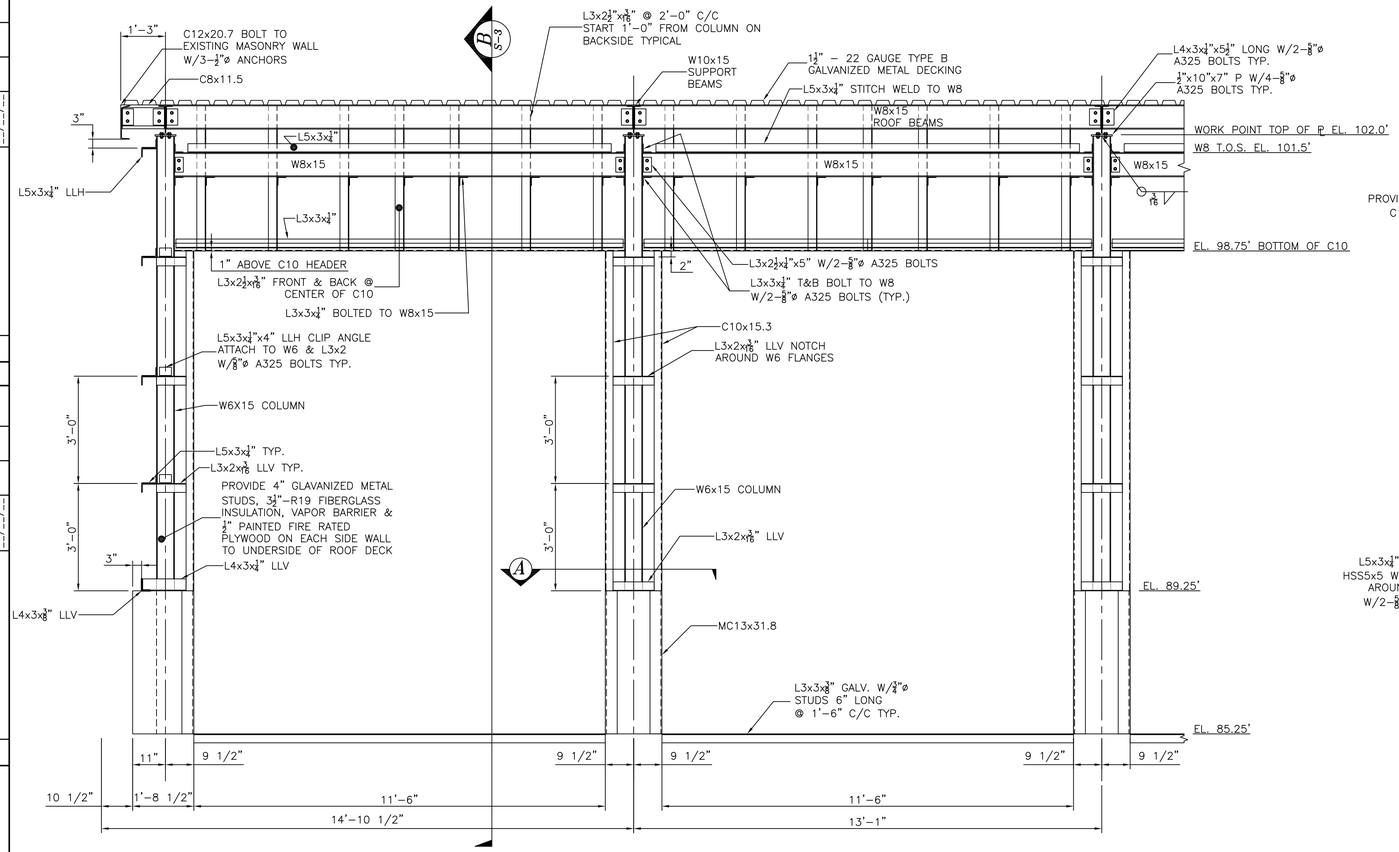

FRONT WALL STRUCTURAL STEEL FRAMING ELEVATION

SCALE: 1/2"=1'-0"

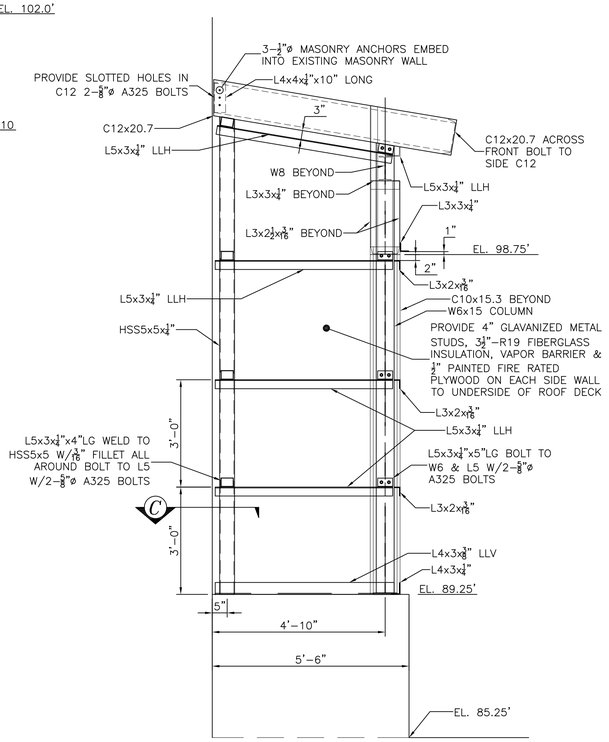

SIDE WALL STRUCTURAL STEEL FRAMING ELEVATION

SCALE: 1/2"=1'-0"

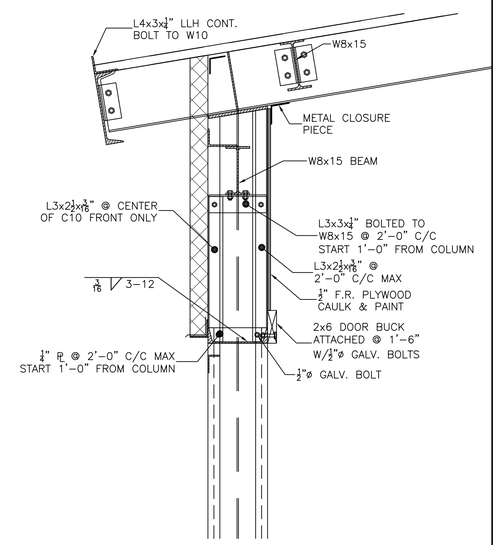

SIDING SUPPORT DETAIL ABOVE DOORS

SCALE: 1 1/2"=1'-0"

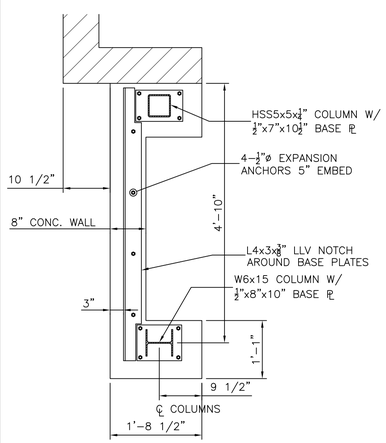

SIDE WALL STRUCTURAL STEEL FRAMING PLAN VIEW

SCALE: 3/4"=1'-0"

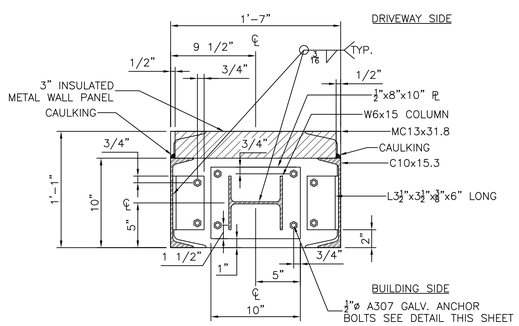

SECTION A

SCALE: 1 1/2"=1'-0"

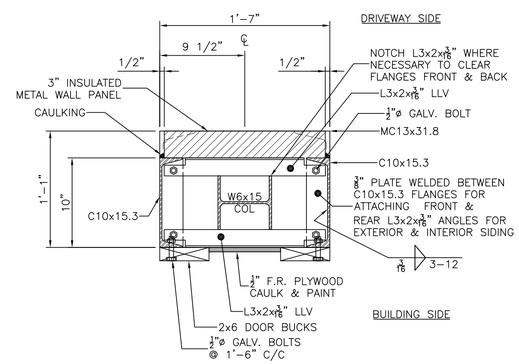

SIDING SUPPORT DETAIL @ COLUMNS

SCALE: 1 1/2"=1'-0"

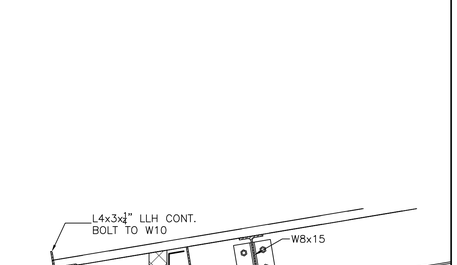

SECTION C

SCALE: 3"=1'-0"

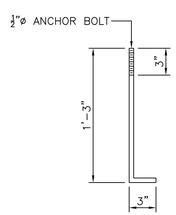

TYPICAL ANCHOR BOLT DETAIL

SCALE: 1 1/2"=1'-0"

This document and any attachments are considered:
BUSINESS CONFIDENTIAL
PROTECTED CRITICAL INFRASTRUCTURE INFORMATION

REFERENCE DRAWINGS

NO.	REVISION	DATE	BY	CK	P. E. STAMPED BY	P. E. No.
0	ISSUED FOR BID	07/11/2011	JFB	DES	DES	6097

Professional Engineer Seal: STATE OF MAINE, DANIEL E SPAULDING No 6097, LICENSED PROFESSIONAL ENGINEER — 07/11/11

DESIGNED DES
DRAWN JFB
CHECKED DES
APPROVED DES
REVIEWED

2011 EAST TRUCK BAY EXTENSION
NEW STRUCTURAL ELEVATION & DETAILS
PORTLAND SERVICE BUILDING

PORTLAND MAINE

CENTRAL MAINE POWER COMPANY
IBERDROLA USA — Central Maine Power
SYSTEM ENGINEERING
DATE: 5/13/2011
SCALE: AS NOTED

742-64-002
REV 0

S-2

ENGINEERING CONSULTANT - LOGO - ADDRESS
SPAULDING ENGINEERING AND CONSTRUCTION SERVICES, INC.
24 COMMERCIAL STREET WATERVILLE, MAINE

THIS DRAWING SHALL BE REVISED ON THE CADD SYSTEM ONLY

NO.	REVISION	DATE	BY	CK	P.E.

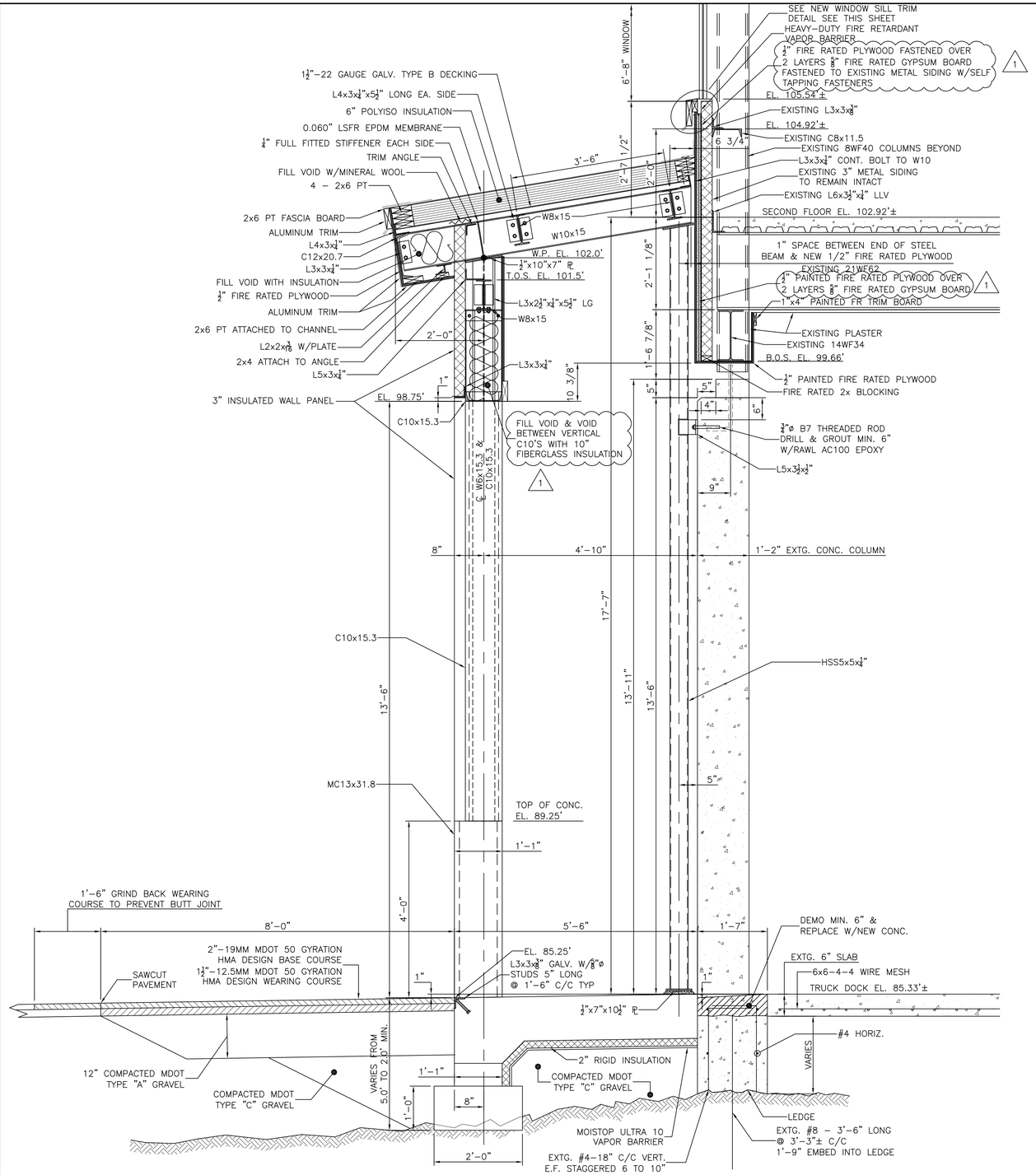

NEW CROSS SECTION
SCALE: 3/4"=1'-0"

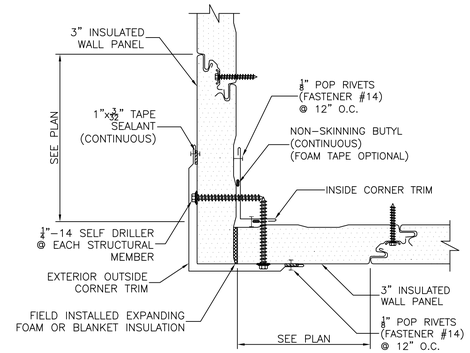

INSULATED METAL WALL PANEL TYPICAL OUTSIDE CORNER DETAIL
SCALE: N.T.S.

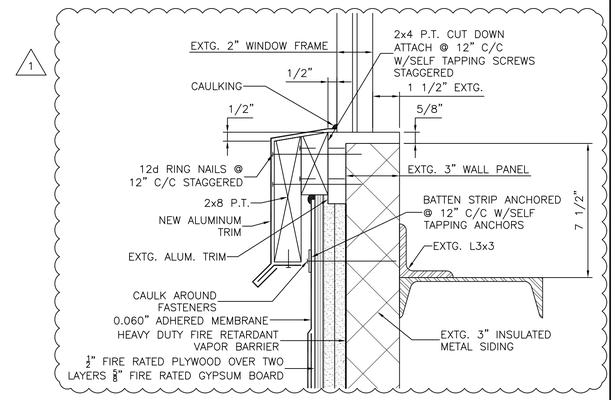

NEW TRIM DETAIL @ EXISTING WINDOWS
SCALE: 3"=1'-0"

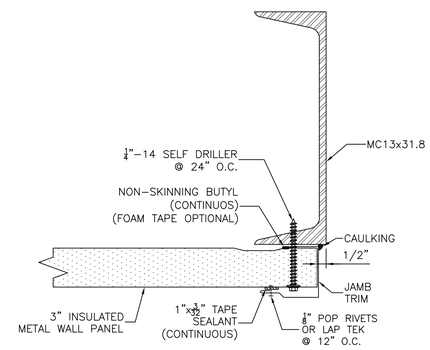

INSULATED METAL WALL PANEL TYPICAL DOOR JAMB DETAIL
SCALE: N.T.S.

ENGINEERING CONSULTANT - LOGO - ADDRESS
SPAULDING ENGINEERING AND CONSTRUCTION SERVICES,INC.
24 COMMON STREET WATERVILLE, MAINE

THIS DRAWING SHALL BE REVISED ON THE CADD SYSTEM ONLY

NO.	REVISION	DATE	BY	CK	P.E.
		__/__/__			
		__/__/__			
		__/__/__			
		__/__/__			

This document and any attachments are considered:
BUSINESS CONFIDENTIAL
PROTECTED CRITICAL INFRASTRUCTURE INFORMATION

REFERENCE DRAWINGS

DD-1

NO.	REVISION	DATE	BY	CK	P. E. STAMPED BY	P. E. No.
1	ADDED 2 LAYERS 5/8" GYPSUM BOARD & 10" FIBERGLASS INSULATION	07/19/2011	JFB	DES	DES	6097
0	ISSUED FOR BID	07/11/2011	JFB	DES	DES	6097

Professional Engineer Seal
STATE OF MAINE
DANIEL E SPAULDING
No 6097
LICENSED
PROFESSIONAL ENGINEER
07/19/11

DESIGNED DES
DRAWN JFB
CHECKED DES
APPROVED DES
REVIEWED

2011 EAST TRUCK BAY EXTENSION
NEW CROSS SECTION & DETAILS
PORTLAND SERVICE BUILDING

PORTLAND MAINE

CENTRAL MAINE POWER COMPANY
IBERDROLA USA
Central Maine Power
SYSTEM ENGINEERING
DATE: 3/16/2011
SCALE: AS NOTED

742-61-032
REV 1

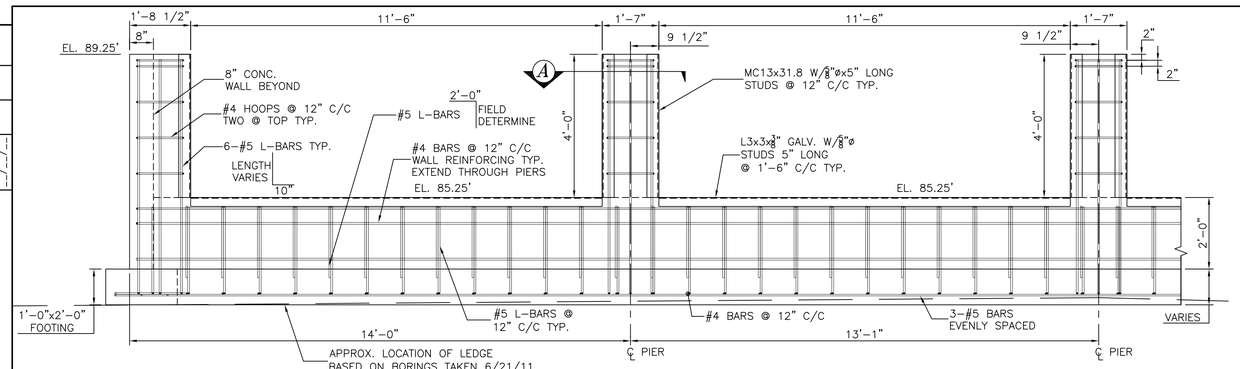

REINFORCING ELEVATION BAYS 1 & 2

SCALE: 1/2"=1'-0"

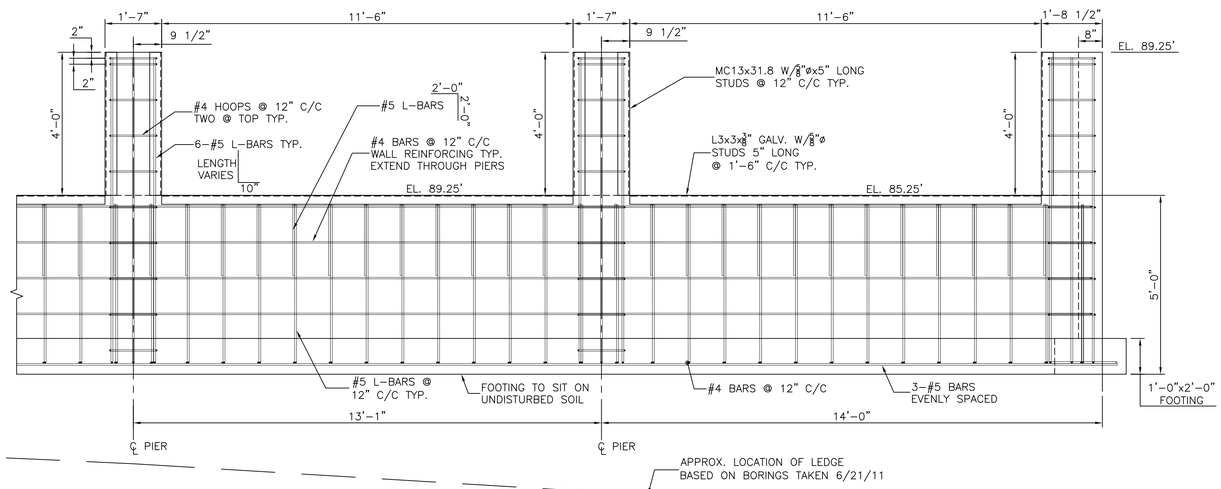

REINFORCING ELEVATION BAYS 11 & 12

SCALE: 1/2"=1'-0"

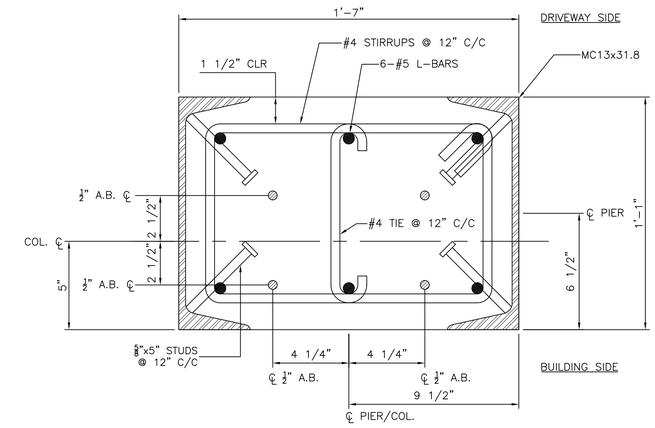

SECTION A

SCALE: 3"=1'-0"

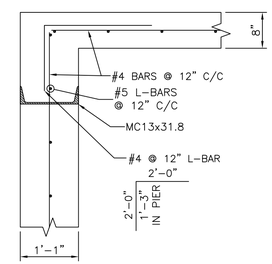

TYPICAL WALL CORNER

SCALE: 3/4"=1'-0"

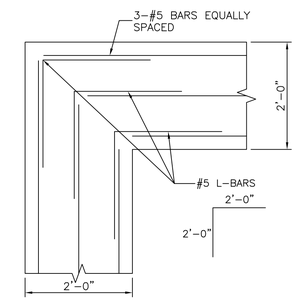

TYPICAL FOOTING CORNER

SCALE: 3/4"=1'-0"

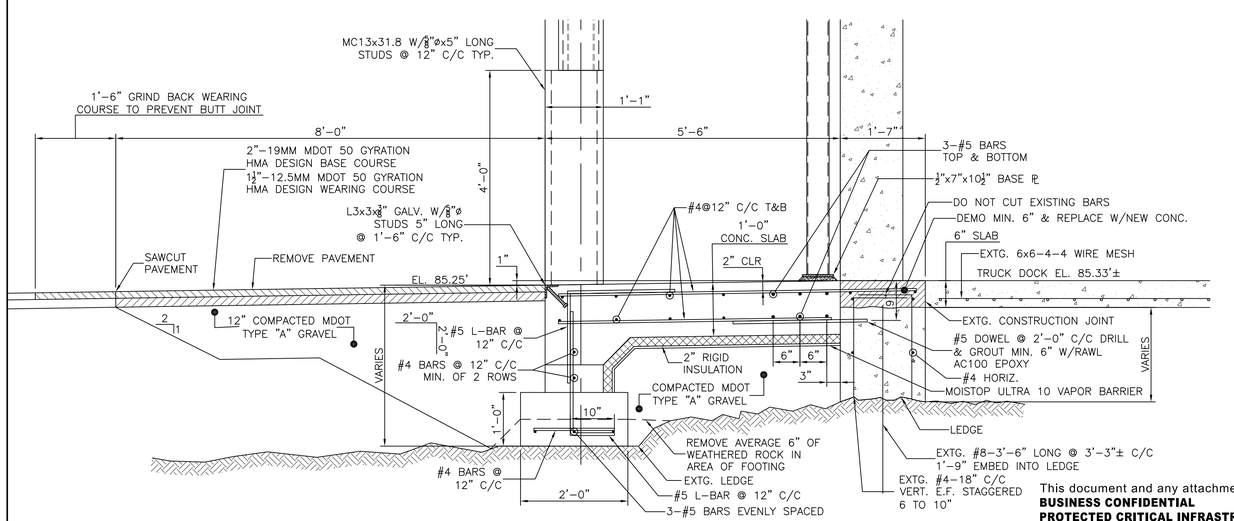

TYPICAL CROSS SECTION THROUGH NEW FOUNDATION

SCALE: 3/4"=1'-0"

This document and any attachments are considered:
BUSINESS CONFIDENTIAL
PROTECTED CRITICAL INFRASTRUCTURE INFORMATION

REFERENCE DRAWINGS

S-4

NO.	REVISION	DATE	BY	CK	P. E. STAMPED BY	P. E. No.
0	ISSUED FOR BID	07/11/2011	JFB	DES	DES	6097

Professional Engineer Seal: STATE OF MAINE, DANIEL E SPAULDING, No 6097, LICENSED PROFESSIONAL ENGINEER — 07/11/11

DESIGNED DES
DRAWN JFB
CHECKED DES
APPROVED DES
REVIEWED

2011 LINE DOCK ADDITION FOUNDATION PLAN & DETAILS PORTLAND SERVICE BUILDING

PORTLAND MAINE

CENTRAL MAINE POWER COMPANY
IBERDROLA USA Central Maine Power
SYSTEM ENGINEERING
DATE: 6/08/2011
SCALE: AS NOTED

742-64-004
REV 0

NO.	REVISION	DATE	BY	CK	P.E.
		--/--/--			
		--/--/--			
		--/--/--			

ENGINEERING CONSULTANT - LOGO - ADDRESS
SPAULDING ENGINEERING AND CONSTRUCTION SERVICES,INC.
WATERVILLE, MAINE
24 COMMON STREET

THIS DRAWING SHALL BE REVISED ON THE CADD SYSTEM ONLY

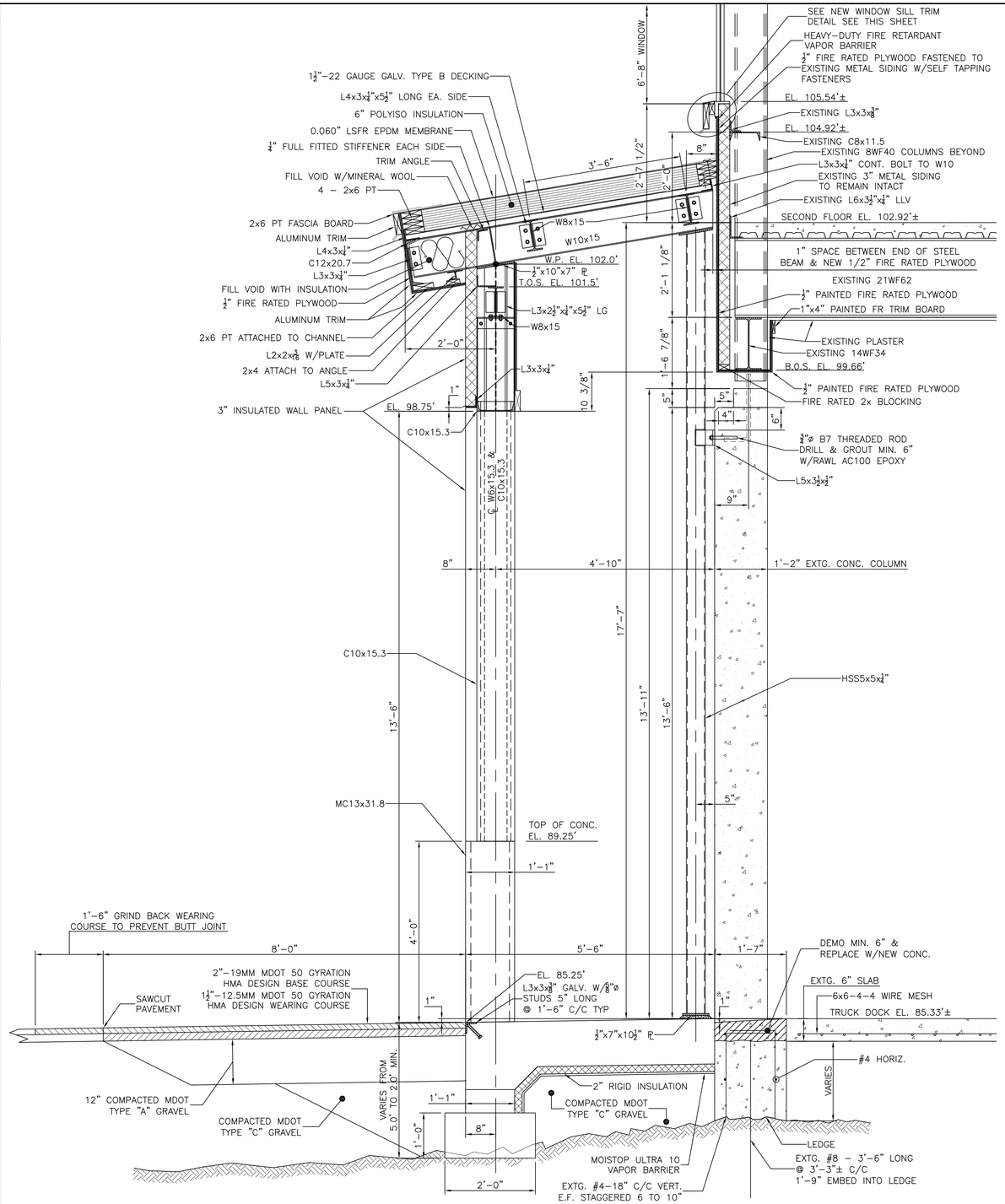

NEW CROSS SECTION
SCALE: 3/4"=1'-0"

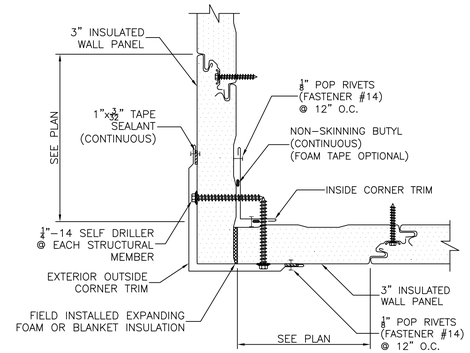

INSULATED METAL WALL PANEL TYPICAL OUTSIDE CORNER DETAIL
SCALE: N.T.S.

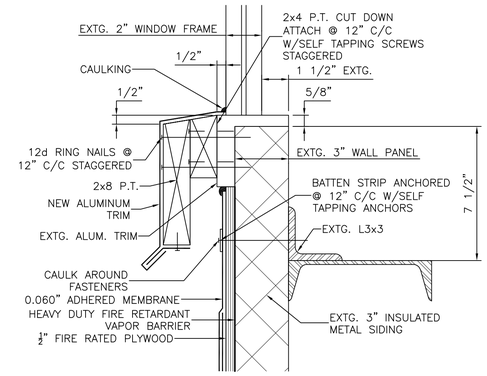

NEW TRIM DETAIL @ EXISTING WINDOWS
SCALE: 3"=1'-0"

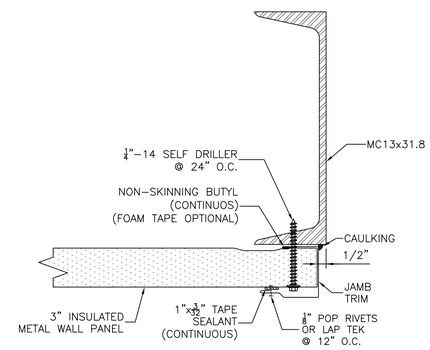

INSULATED METAL WALL PANEL TYPICAL DOOR JAMB DETAIL
SCALE: N.T.S.

NO.	REVISION	DATE	BY	CK	P. E. STAMPED BY	P. E. No.
0	ISSUED FOR BID	07/11/2011	JFB	DES	DES	6097

This document and any attachments are considered:
BUSINESS CONFIDENTIAL
PROTECTED CRITICAL INFRASTRUCTURE INFORMATION

REFERENCE DRAWINGS

DD-1

Professional Engineer Seal: STATE OF MAINE, DANIEL E SPAULDING No 6097, LICENSED PROFESSIONAL ENGINEER
07/11/11

DESIGNED DES
DRAWN JFB
CHECKED DES
APPROVED DES
REVIEWED

2011 EAST TRUCK BAY EXTENSION
NEW CROSS SECTION & DETAILS
PORTLAND SERVICE BUILDING

PORTLAND MAINE

CENTRAL MAINE POWER COMPANY
IBERDROLA USA Central Maine Power
SYSTEM ENGINEERING
DATE: 3/16/2011
SCALE: AS NOTED

742-61-032
REV 0

NO.	REVISION	DATE	BY	CK	P.E.
		__/__/__			
		__/__/__			
		__/__/__			
		__/__/__			

ENGINEERING CONSULTANT - LOGO - ADDRESS
SPAULDING ENGINEERING AND CONSTRUCTION SERVICES,INC.
24 COMMON STREET WATERVILLE, MAINE

THIS DRAWING SHALL BE REVISED ON THE CADD SYSTEM ONLY

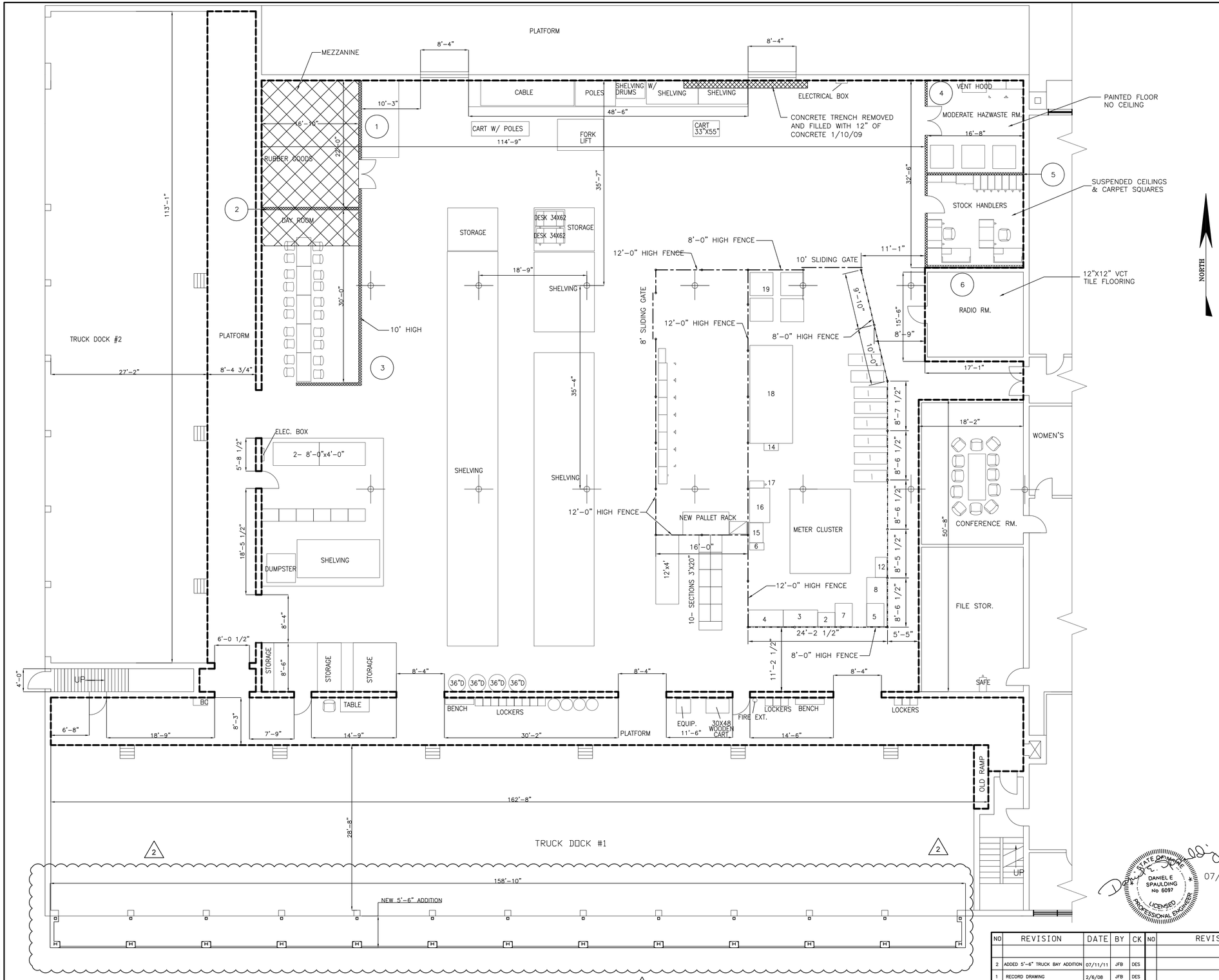

WAREHOUSE & TRUCK BAY PLAN
SCALE: 1/8"=1'-0"

REPLACEMENT WALL SCHEDULE

WALL #	DESCRIPTION
1 RUBBER GOODS STORAGE AREA 2	NON-LOAD BEARING WALLS WITH FIRE RESISTANT 2X4 STUDS @ 16"O.C. WITH 1/2" FIRE RESISTANT PLYWOOD ON BOTH SIDES OF WALL STUDS. WALL HEIGHT APPROXIMATELY 8' WITH MEZZANINE ABOVE SUPPORTED BY STEEL FRAME WORK.
3 LINE CREW QUARTERS USED IN MORNING AND END OF DAY	NON-LOAD BEARING WALL WITH FIRE RESISTANT 2X4 STUDS @ 16"O.C. WITH 1/2" FIRE RESISTANT PLYWOOD ON BOTH SIDES OF WALL STUDS. APPROXIMATELY 10' IN HEIGHT. NO CEILING IS PLANNED FOR THIS AREA WHICH WILL BE OPEN TO THE WAREHOUSE INTERIOR.
4 STOCK HANDLERS OFFICE & HAZARDOUS WASTE ROOM 5	NON-LOAD BEARING WALL WITH STEEL-6" STUDS CWN 16 @ 24"O.C. WITH 1/2" FIRE RESISTANT PLYWOOD ON EXTERIOR AND INSIDE OF MODERATE HAZARDOUS WASTE STORAGE AND 5/8" TYPE X GYPSUM BOARD ON INSIDE OF STOCK HANDLERS OFFICE. APPROXIMATELY 26' WALL HEIGHT. SUSPENDED CEILING IN STOCK HANDLERS OFFICE.
6 STOCK HANDLER OFFICE	NON LOAD BEARING WALL WITH STEEL-6" STUDS CWN 16 @ 24"O.C. WITH 1/2" FIRE RESISTANT PLYWOOD ON EXTERIOR AND 5/8" TYPE X GYPSUM BOARD ON INSIDE OF ROOM. WALL HEIGHT APPROXIMATELY 26'.

NOTE: ALL AREAS WILL HAVE AN AUTOMATIC SPRINKLER SYSTEM.

NEW FENCING
EXISTING FENCING CUT DOWN TO 8'-0" HIGH

WAREHOUSE, TRUCK BAY #1, TRUCK BAY #2, RUBBER GOODS, STOCK HANDLERS & MODERATE HAZWASTE ROOM CONCRETE FLOORS WERE COATED WITH AN EPOXY FLOOR SYSTEM IN 2007

SURFACE PREP: WET GRINDING TO ACHIEVE ANICRI CSP-3 SURFACE PROFILE

FLOOR SYSTEM: PORTECTIVE FLOORINGS & LININGS URE-CRETE 4410FS 1/4" MODERATE SLIP RESISTANT SCURRY TYPE TROWEL APPLIED FLOORING SYSTEM. WITH A 1000 CS SYSTEM GENERAL PURPOSE EPOXY FLOOR COATING @ 0.025" THICKNESS

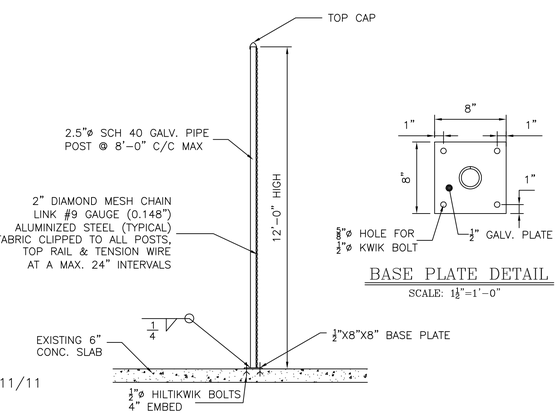

BASE PLATE DETAIL
SCALE: 1 1/2"=1'-0"

12'-0" HIGH FENCE DETAIL
SCALE: 3/8"=1'-0"

STATE OF MAINE DANIEL E SPAULDING No 6097 LICENSED PROFESSIONAL ENGINEER 07/11/11

NO	REVISION	DATE	BY	CK
2	ADDED 5'-6" TRUCK BAY ADDITION	07/11/11	JFB	DES
1	RECORD DRAWING	2/6/08	JFB	DES
0	ISSUED FOR CONSTRUCTION	10/08/07	JFB	DES

NO	REVISION	DATE	BY	CK

DESIGNED DES
DRAWN JFB
CHECKED DES
APPROVED DES
REVIEWED

SPAULDING ENGINEERING AND CONSTRUCTION SERVICES,INC.
24 COMMON STREET WATERVILLE, MAINE

PORTLAND SERVICE BUILDING
PCB REMEDIATION PROJECT
WAREHOUSE & TRUCK BAY PLAN
REPLACEMENT WALL CONFIGURATION & FENCE LAYOUT

CENTRAL MAINE POWER COMPANY
ENGINEERING DEPARTMENT
SCALE AS NOTED DATE 4/03/07

742-61-28

THIS DRAWING SHALL BE REVISED ON THE CADD SYSTEM ONLY

SCANNED