Dewberry

Dewberry Engineers Inc.
280 Summer Street, 10th Floor
Boston, MA 02210

617.695.3400
617.695.3310 fa
www.dewberry.

CITY OF PORTLAND, MAINE RESURGAM
Reviewed for Code Compliance
Inspections Division
Approved with Conditions
Date: 10/05/17

November 14, 2016

Verizon Wireless
118 Flanders Road
Westborough, MA 01581-3956

RE: **Site Name: Portland 5 ME**
Site Address: 52 Canco Road
Portland, ME 04103

To whom it may concern,

Verizon Wireless has proposed to modify their existing installation at the above referenced site. Dewberry Engineers Inc. (Dewberry) has evaluated the final equipment mounting configuration, which is to be mounted on an existing platform mount at a centerline of 119 ft. A.G.L. on an existing 140 ft. tall monopole. Additional equipment will be mounted on an existing pipe mounts behind the proposed antennas. All equipment shall utilize existing mounting pipes.

See below for the final loading configurations:

Final Equipment Loading On Platform Mount:

(12) Commscope SBNHH-1D65B Antenna	40.8 lbs. each (72.0" x 11.9" x 7.1")
(3) B25 RRH4x30-4R	55 lbs. each (22" x 12" x 9.5")

Total Dead Load = 654.6 lbs.

Photographs and specifications for the existing mounting equipment were provided by Wireless Construction, Inc. Based on Dewberry's evaluation of the information provided; the equipment specified above may be mounted on the existing sector mount, in the configuration shown in the Rev-0 ANTMO Drawings, provided by Dewberry, dated 11/11/2016.

Please note; our assessment is limited to only the existing platform and collar mounts on the existing monopole and the existing mounts' components. Dewberry has not analyzed the monopole structure or corresponding monopole components to which the mounts are to be attached. No conclusions, expressed or implied shall be made to the capacity of any components with the exception of the proposed antenna/equipment mounts previously described. The addition of any new equipment or reconfiguration of the proposed equipment shown on the plans will require further evaluation and design.

If you have any questions, please do not hesitate to call me at 617-531-0742.

Sincerely,
Dewberry Engineers Inc.

Brenden Alexander, P.E.
Manager MEPS Engineering

STATE OF MAINE
BRENDEN E. ALEXANDER
13245
LICENSED PROFESSIONAL ENGINEER

Reviewed for Code Compliance
Inspections Division
Approved with Conditions
Date: 10/05/17

Dewberry
Structural Calculation Summary Sheet

Job No:	50002925/50085167	**By:** JJC	**Date:** 11/10/16
Job Name:	Portland 5 ME	**Chkd:**	**Date:**

Location: 52 Canco Road, Portland, ME 04103
Client: Verizon

Site Inspection/Photos/Other Data provided by: Joe Mazzeo

Brief Description:
1. Proposed replacement of (12) existing antennas on existing pipe mounts attached to an existing monopole.
2. Proposed installation of additional (3) RRU on existing pipe mounts.
3. Existing structure is a 140ft tall monopole.
4. Information for analysis from site visit on 10/11/16.

Basic Criteria:
1. ASCE 7-05.
2. AISC 14th Ed.
3. TIA 222-G
4. ME State Building Code

Design/Analysis Summary:
1. Proposed antennas and RRU are to be mounted to existing pipes on the existing steel antenna mount.
2. Design and analysis based on dead, wind, ice, and live load, design checks for normal bending stresses and shear.
3. The existing antenna structural elements have sufficient capacity for proposed loading. See sketch for proposed location.

REVIEWED FOR CITY OF PORTLAND, MAINE
Reviewed for Code Compliance
Approved with Conditions
Approved with Conditions
Date: 10/05/17

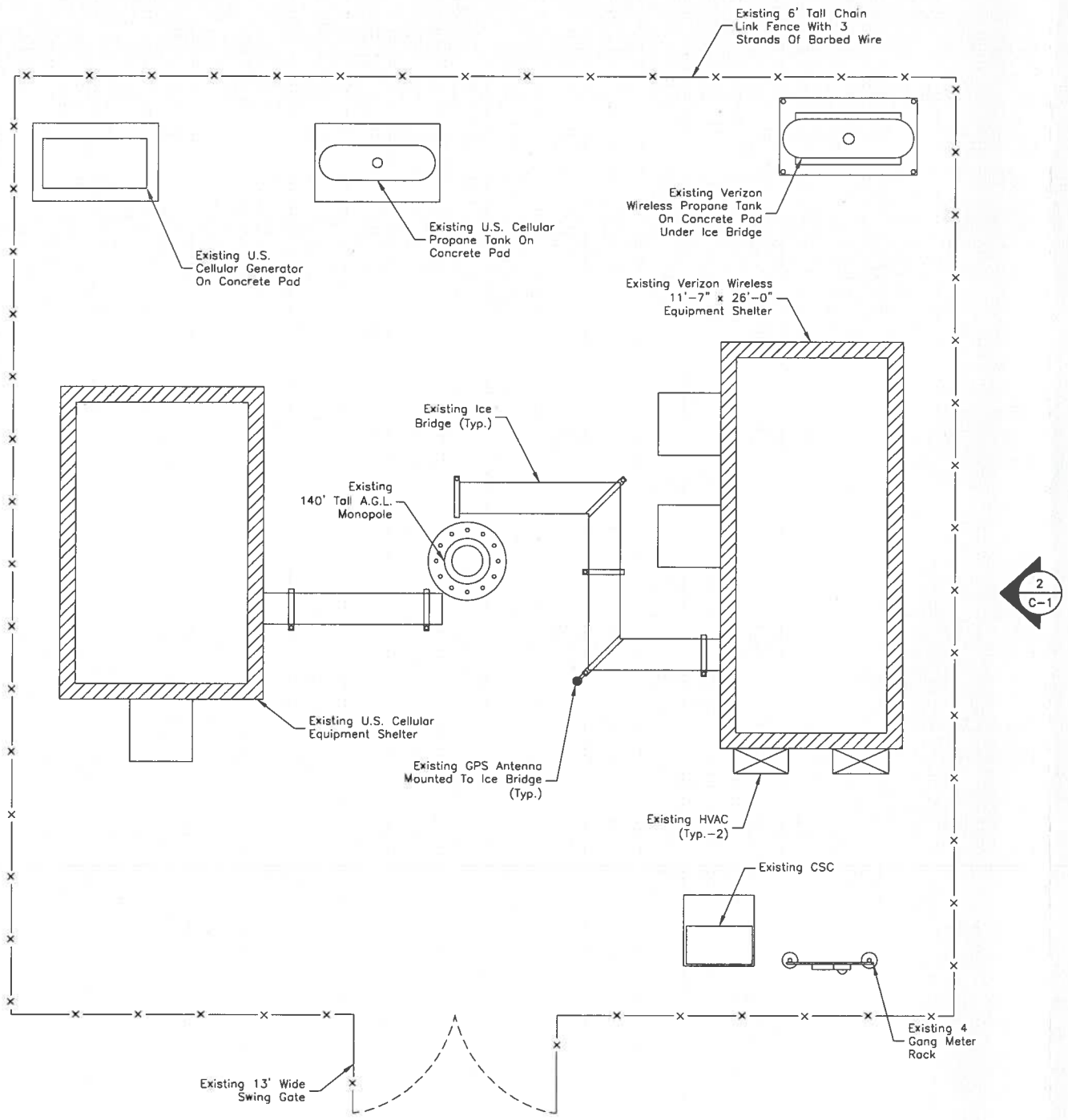

SITE PLAN

SCALE: 1"=10' FOR 11"x17"
1"=5' FOR 22"x34"

0' 5' 10'

1

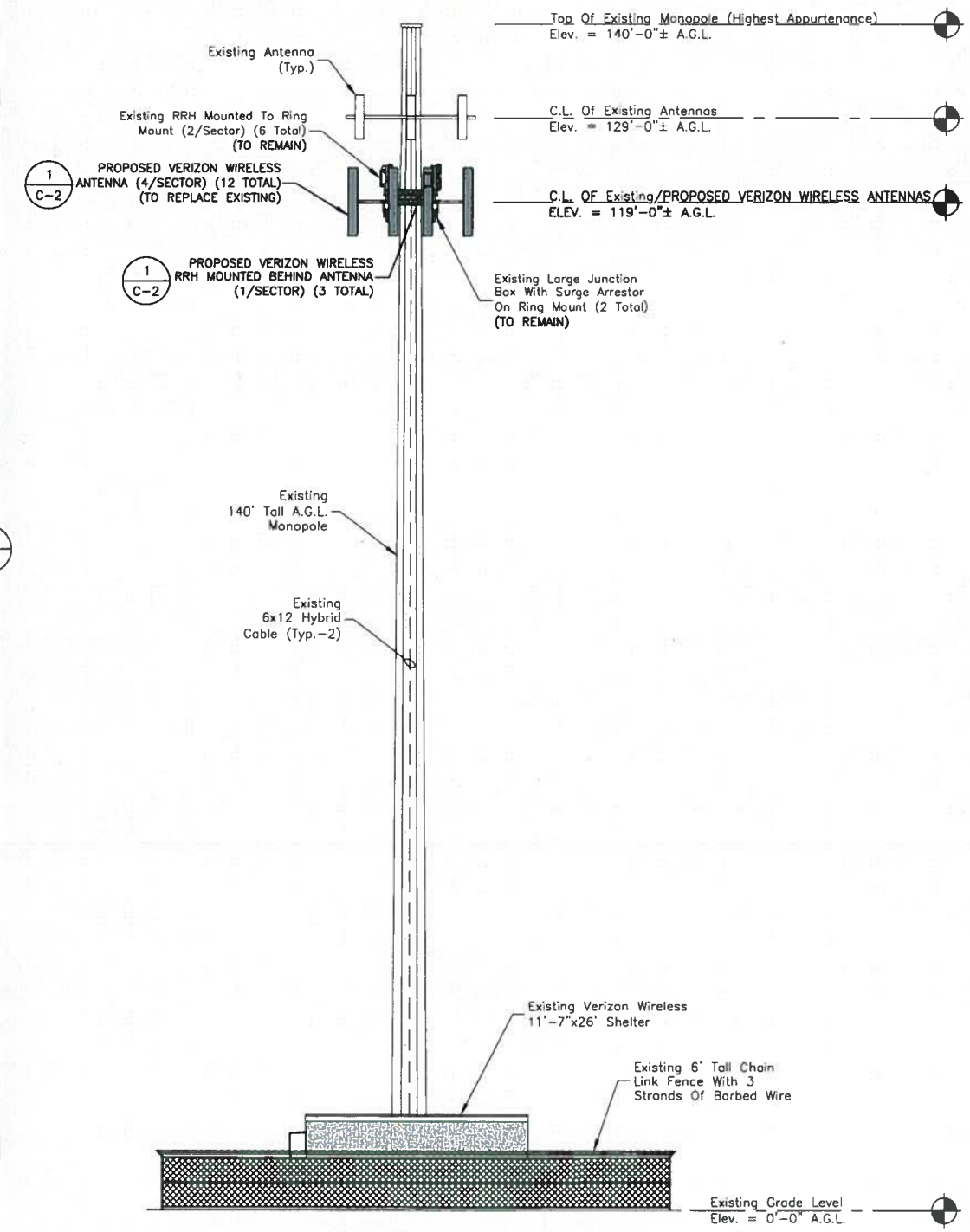

ELEVATION

SCALE: 1"=20' FOR 11"x17"
1"=10' FOR 22"x34"

0' 10' 20'

2

NOTES:

1. SOME EXISTING & PROPOSED INFORMATION NOT SHOWN FOR CLARITY.
2. NORTH ARROW & ELEVATIONS SHOWN AS APPROXIMATE.
3. DEWBERRY ENGINEERS, INC HAS NOT BEEN PROVIDED WITH AND HAS NOT BEEN CONTRACTED TO PERFORM A STRUCTURAL ANALYSIS AND THEREFORE ASSUMES NO RESPONSIBILITY FOR THE TOWER OR ITS FUTURE OR PROPOSED TOWER & ANTENNA INSTALLATIONS. TOWER RELATED IMPROVEMENTS ARE NOT TO BE INSTALLED WITHOUT A PASSING STRUCTURAL ANALYSIS.
4. PLANS BASED ON OBSERVATION MADE DURING SITE VISIT BY DEWBERRY ENGINEERS INC. ON 10-11-16.

verizon WIRELESS
VERIZON WIRELESS
118 FLANDERS ROAD
WESTBOROUGH, MA 01581-3956

PORTLAND 5 ME

ANTMO DRAWINGS

0	10/28/16	FOR SUBMITTAL

Dewberry®
Dewberry Engineers Inc.
280 SUMMER STREET
10TH FLOOR
BOSTON, MA 02210
PHONE: 617.695.3400
FAX: 617.695.3310

DRAWN BY:	SK
REVIEWED BY:	JCM
CHECKED BY:	BBR
PROJECT NUMBER:	50002925
JOB NUMBER:	50085167

SITE ADDRESS

52 CANCO ROAD
PORTLAND, ME 04103

SHEET TITLE

SITE PLAN
& ELEVATION

SHEET NUMBER

C-1

Reviewed for Code Compliance
Approved with Conditions
Approved with Conditions
Date: 10/05/17

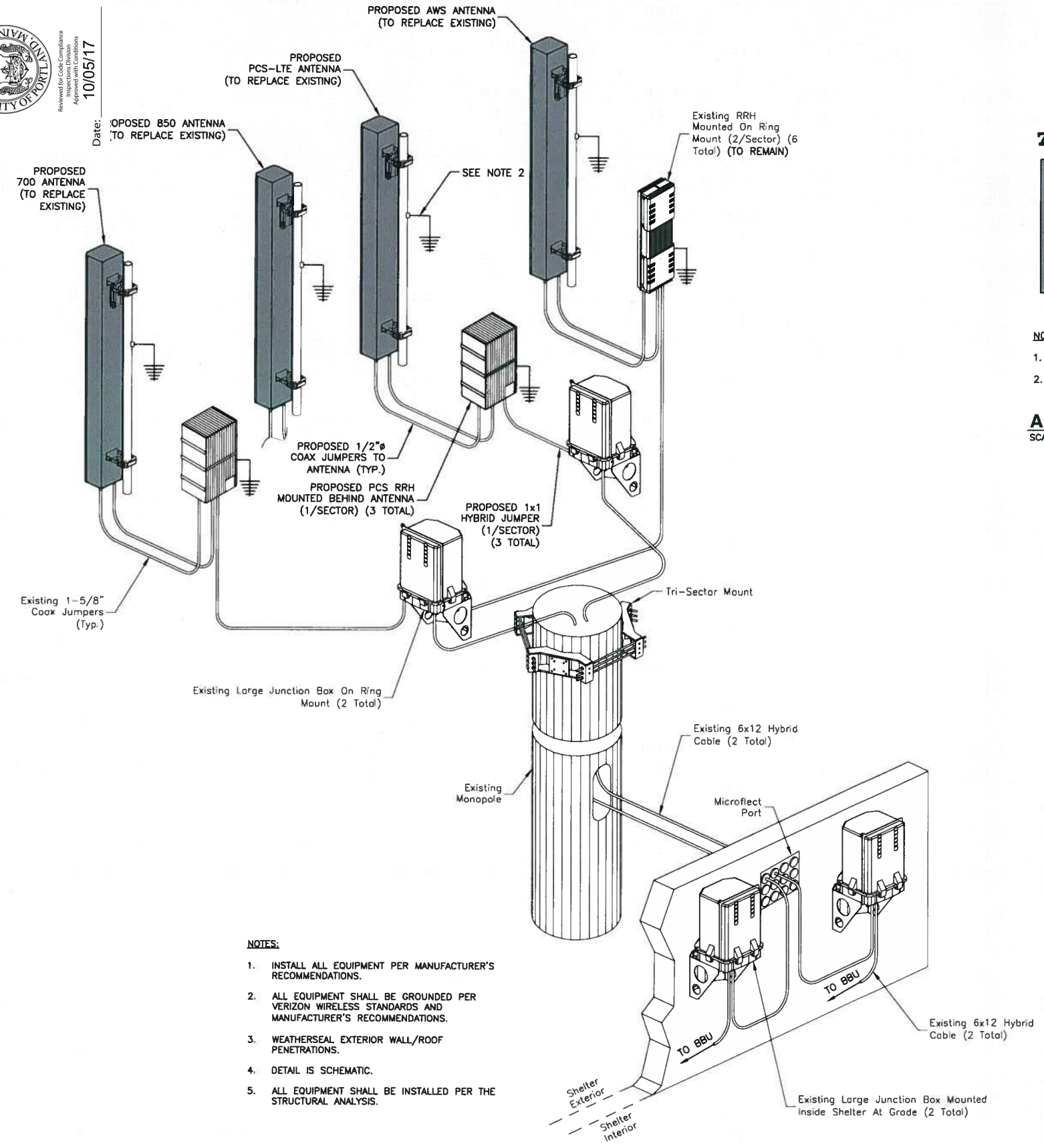

NOTES:

1. INSTALL ALL EQUIPMENT PER MANUFACTURER'S RECOMMENDATIONS.
2. ALL EQUIPMENT SHALL BE GROUNDED PER VERIZON WIRELESS STANDARDS AND MANUFACTURER'S RECOMMENDATIONS.
3. WEATHERSEAL EXTERIOR WALL/ROOF PENETRATIONS.
4. DETAIL IS SCHEMATIC.
5. ALL EQUIPMENT SHALL BE INSTALLED PER THE STRUCTURAL ANALYSIS.

EQUIPMENT CONFIGURATION (1)

SCALE: N.T.S

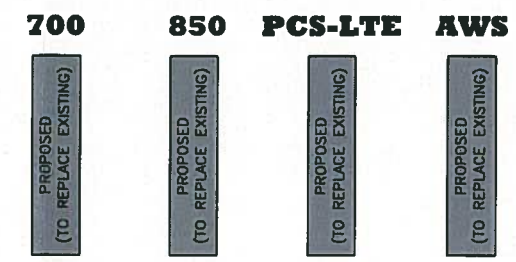

NOTES:

1. AS VIEWED STANDING BEHIND THE ANTENNAS.
2. TYPICAL FOR 3 SECTORS. VERIFY FINAL ANTENNA DESIGN SHEET PRIOR TO CONSTRUCTION.

ANTENNA CONFIGURATION (2)

SCALE: N.T.S.

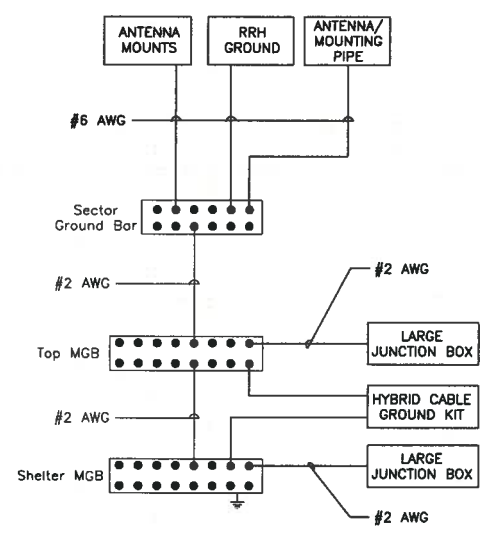

NOTES:

1. ALL PROPOSED EQUIPMENT TO BE GROUNDED TO SECTOR GROUND BAR.
2. TYPICAL FOR FOR ALL SECTORS.
3. GROUNDING SHALL COMPLY WITH NEC ART. 250 & VERIZON WIRELESS SPECIFICATIONS.

SCHEMATIC GROUNDING DIAGRAM (3)

SCALE: N.T.S.

GENERAL NOTES:

1. ALL DIMENSIONS TO, OF, AND ON EXISTING BUILDINGS, DRAINAGE STRUCTURES, AND SITE IMPROVEMENTS SHALL BE VERIFIED IN FIELD BY CONTRACTOR PRIOR TO ALL FABRICATION WITH ALL DISCREPANCIES REPORTED IMMEDIATELY TO THE ENGINEER.
2. THESE DRAWINGS DO NOT INCLUDE NECESSARY COMPONENTS FOR CONSTRUCTION SAFETY WHICH IS THE SOLE RESPONSIBILITY OF THE CONTRACTOR.
3. BRACE STRUCTURES UNTIL ALL STRUCTURAL ELEMENTS NEEDED FOR STABILITY ARE INSTALLED. THESE ELEMENTS ARE AS FOLLOWS: LATERAL BRACING, ANCHOR BOLTS, ETC.
4. INCORRECTLY FABRICATED, DAMAGED, OR OTHERWISE MISFITTING OR NONCONFORMING MATERIALS OR CONDITIONS SHALL BE REPORTED TO THE OWNER PRIOR TO REMEDIAL OR CORRECTIVE ACTION. ANY SUCH REMEDIAL ACTION SHALL REQUIRE WRITTEN APPROVAL BY THE OWNER'S REPRESENTATIVE PRIOR TO PROCEEDING.
5. EACH CONTRACTOR SHALL COOPERATE WITH THE OWNER'S REPRESENTATIVE, AND COORDINATE HIS WORK WITH THE WORK OF OTHERS.
6. REPAIR ANY DAMAGE DURING CONSTRUCTION TO MATCH EXISTING PRE-CONSTRUCTION CONDITIONS TO THE SATISFACTION OF THE CONSTRUCTION MANAGER.
7. THE CONTRACTOR SHALL SUPERVISE AND DIRECT THE PROJECT DESCRIBED HEREIN. THE CONTRACTOR SHALL BE SOLELY RESPONSIBLE FOR ALL CONSTRUCTION MEANS, METHODS, TECHNIQUES, SEQUENCES AND PROCEDURES AND FOR COORDINATING ALL PORTIONS OF THE WORK UNDER THE CONTRACT.
8. REUSE EXISTING ANTENNA MOUNTS & COAX. INSPECT FOR DAMAGE OR DECAY AND REPLACE AS NEEDED PER STRUCTURAL ANALYSIS.
9. DEWBERRY ENGINEERS, INC HAS NOT BEEN PROVIDED WITH AND HAS NOT BEEN CONTRACTED TO PERFORM A STRUCTURAL ANALYSIS AND THEREFORE ASSUMES NO RESPONSIBILITY FOR THE TOWER OR ITS FUTURE OR PROPOSED TOWER & ANTENNA INSTALLATIONS. TOWER RELATED IMPROVEMENTS ARE NOT TO BE INSTALLED WITHOUT A PASSING STRUCTURAL ANALYSIS.

verizon WIRELESS
VERIZON WIRELESS
118 FLANDERS ROAD
WESTBOROUGH, MA 01581-3956

PORTLAND 5 ME

ANTMO DRAWINGS		
0	10/28/16	FOR SUBMITTAL

Dewberry
Dewberry Engineers Inc.
280 SUMMER STREET
10TH FLOOR
BOSTON, MA 02210
PHONE: 617.695.3400
FAX: 617.695.3310

DRAWN BY:	SK
REVIEWED BY:	JCM
CHECKED BY:	BBR
PROJECT NUMBER:	50002925
JOB NUMBER:	50085167

SITE ADDRESS

52 CANCO ROAD
PORTLAND, ME 04103

SHEET TITLE

CONSTRUCTION DETAILS

SHEET NUMBER

C-2

CITY OF PORTLAND, MAINE
RESURGAM
Reviewed for Code Compliance
Inspections Division
Approved with Conditions
Date: 10/05/17

SITE PRO 1

A valmont COMPANY

July 23, 2015

RE: ANSI/TIA-222-G Mount Capacity
Valmont / Site Pro 1 Mount: 12' Low Profile Platform

Part No. RMQP-xxx

The 12' Low Profile Platform referenced above has been analyzed in accordance with ANSI/TIA-222-G-2005 standard using the following design criteria.

Mount Design Criteria		**EPA (no antenna pipes)**
Structure Height	300'	
Basic Wind Speed	140 mph	EPA_N = 26.4 Sq-Ft
Ice Wind Speed	60 mph	EPA_T = 24.6 Sq-Ft
Structure Class	II	
Exposure Category	B	
Topographic Category	I	
Factored Ice Thickness	2.49"	

Wind Direction Factor	0.95	Tubular Pole Structures, Lattice Structures with other than triangular, square or rectangular cross-sections, strength design of appurtenances
Gust Effect Factor	1.0	Appurtenances

Modeling & Applied Appurtenance Loading

The mount was analyzed for four (4) mounting locations (equipment + mounting pipe) evenly spaced across each face of the mount, no vertical eccentricity (12 total mounting locations). Based on the Design Criteria above, the maximum allowable force per mounting location is described in the table below:

Normal Wind Load	= factored 800 lbs	= non-factored 500 lbs	— 329 lb OK
Tangential Wind Load	= factored 480 lbs	= non-factored 300 lbs	— 218 lb = 300 lbs OK
Dead Load	= factored 200 lbs	= non-factored 167 lbs	— 41 lb + 55 lb + 58 lb = 154 lb OK
Normal Wind Load w/ Ice	= N/A	= non-factored 200 lbs	— 74 lb OK
Tangential Wind Load w/ Ice	= N/A	= non-factored 120 lbs	— 56 lb OK
Ice Load	= N/A	= non-factored 400 lbs	— 237 lb OK
Maintenance Wind Load	= N/A	= non-factored 80 lbs	
Live Load	= factored 1125 lbs	= non-factored 750 lbs	

The nominal live load is based on 250 lbs at three (3) locations simultaneously (750 lbs total) to provide access for climbers

PiROD
MICROFLECT
Valmont Site Pro 1
2400 Walter Glaub Drive Plymouth, Indiana 46563-4005 USA
574-936-4221 Fax 574-936-8925 www.sitepro1.com

Dewberry®

Job Number 50
Made by:
Date: 11/10/16
Checked by:
Date:

Reviewed for Code Compliance
Inspections Division
Approved with Conditions
Date: 10/05/17

Portland 5 ME - Wind load

\\Essex\Projects\50002925\50085167\Tech\50085167 - Portland 5.xlsx

Wind Loading per TIA/222-G Standard

General Information from TIA-222-G-1-2007

Item	Value	Description	Reference
V_{max} =	100.00	Cumberland County, ME (without ice)	*Annex B*
V_i =	40.00	Cumberland County, ME (with ice)	*Annex B*
K_d =	0.95	Wind Direction Probability Factor	*Table 2-2*
I =	1.00	Importance Factor	*Table 2-3*
z = h =	119.00	ft. (A.G.L.)	*Max. Center of Mount*
Exp. Cat.	C	Exposure Category	*Sect. 2.6.5.1*
z_g =	900.00	Exposure Category Coeff.	*Table 2-4*
a =	9.50	Exposure Category Coeff.	*Table 2-4*
$K_{z\,(min)}$ =	0.85	Exposure Category Coeff.	*Table 2-4*
K_e =	1.00	Exposure Category Coeff.	*Table 2-4*
K_t =	N/A	Topo. Cat. Coeff.	*Table 2-5, "N/A" if Topo. Cat. = 1*
K_z =	1.31	$= 2.01(z/z_g)^{(2/a)}$	*Sect. 2.6.5.2*
Topo. Cat.	1.00	Topographic Category (1-5)	*Sect. 2.6.6.2*
e =	2.72	Natural Logarithmic base	
f =	N/A	Height Attenuation Factor	*Table 2-5, "N/A" if Topo. Cat. = 1*
H =	N/A	ft. Height of crest above surrounding terrain	
K_h =	N/A	$e^{((f*z)/H)}$	*Sect. 2.6.6.4*
K_{zt} =	1.00	$= [1+((K_e*K_t)/K_h)]^2$	*Sect. 2.6.6.4*
G_h =	1.35	Gust Effect Factor	*Sect. 2.6.7*
t_i =	1.00	Design Ice Thickness	*Annex B*

CITY OF PORTLAND, MAINE
RESURGAM
Reviewed for Code Compliance
Inspections Division
Approved with Conditions
Date: 10/05/17

Dewberry

Job Number 50
Made by:
Date: 11/10/16
Checked by:
Date:

Portland 5 ME - Wind Load (cont'd)

\\Essex\Projects\50002925\50085167\Tech\50085167 - Portland 5.xlsx

Wind Loading per TIA/222-G Standard (cont'd)

Design Wind Forces:

$$q_z = 0.00256(K_z)(K_{zt})(K_d)(V^2)(I)$$

where:

K_z =	1.31	K_d =	0.90	V_{max} =	100.00 mph
K_{zt} =	1.00	I =	1.00	V_i =	40.00 mph

q_z = 30.25 psf *(velocity pressure without ice)*

q_z = 4.84 psf *(velocity pressure with ice)*

Section 2.6.9.2

$F_a = q_z * G_h * (EPA)_a$ *(see calculation table on next page)*

F = Horiz. wind force on the appurtenance in the direction of the wind
q_z = Velocity pressure from Section 2.6.9.6
$(EPA)_a$ = effective projected area of the appurtenance
-Wind load on Equipment:
$(EPA)_a = (EPA)_n$ *(Conservative)* $= \sum(C_aA_a)_n$ *(Front)*
$(EPA)_a = (EPA)_t$ *(Conservative)* $= \sum(C_aA_a)_t$ *(Side)*

Design Ice Load:

Section 2.6.8

t_i =	1.00	*(design ice thickness)*	$K_{iz} = (z/33)^{0.10} \leq 1.4$		*(height escalation factor)*
I =	1.00	*(importance factor)*	=	1.14	
z =	119.00	*(design height)*	$t_{iz} = 2 * t_i * I * K_{iz} * (K_{zt})^{0.35}$		*(factored ice thickness)*
K_{zt} =	1.00	*(topographic factor)*	=	2.28	

$F_i = H * [\pi * t_{iz} * (D_c + t_{iz})] * 56\ lb/ft^3$ *where D_c = largest out to out dimension of member*
(see calculation table on next page)

Dewberry

Job Number 50
Made by:
Date: 11
Checked by:
Date:

Reviewed for Code Compliance
Inspections Division
Approved with Conditions
Date: 10/05/17

Portland 5 ME - Wind Load (cont'd)

\\Essex\Projects\50002925\50085167\Tech\50085167 - Portland 5.xlsx

Wind Loading per TIA/222-G Standard (cont'd)

Element Definition:

	Description	Dimensions (in.)			Weight
		W	D	H	(lb)
Proposed	SBNHH-1D65B	11.90	7.10	72.00	40.6
Existing	SWCP 2x5515	14.00	11.30	76.70	30
Existing	SACP 2X5516	8.60	6.50	56.00	16
Proposed	RRH2x60-AWS	11.00	6.00	37.00	55
Proposed	PCS B25 RRH4x30	12.00	9.50	22.00	55

Members	Dimensions (ft.)			Area $(A_a)_n$ (Normal)	Area $(A_a)_t$ (Side)	Aspect Ratio	Aspect Ratio	C_a (front)	C_a (side)
	Width *(Normal)*	Depth *(Tangent)*	Height *(or span)*	*(sf)*	*(sf)*	*(front)*	*(side)*	*Table 2-8*	*Table 2-8*
SBNHH-1D65B	0.99	0.59	6.00	5.94	3.54	6.06	10.17	1.36	1.51
SWCP 2x5515	1.17	0.94	6.39	7.48	6.01	5.46	6.80	1.33	1.39
SACP 2X5516	0.72	0.54	4.67	3.36	2.52	6.49	8.65	1.38	1.45
RRH2x60-AWS	0.92	0.50	3.08	2.83	1.54	3.35	6.16	1.24	1.36
PCS B25 RRH4x30	1.00	0.79	1.83	1.83	1.45	1.83	2.32	1.20	1.20

Wind Loading without Ice:

Calculation of Design Forces	Weight (lb)	$F_{(a)n}$ (lb) *(Normal)*	$F_{(a)t}$ (lb) *(Tangent)*	Length/ Number of Supports	Gravity Load Per Support (lb)	$F_{(a)n}$ Per Support (lb) or (plf)	$F_{(a)t}$ Per Support (lb) or (plf)
Members							
SBNHH-1D65B	40.60	**329.44**	**217.65**	1.00	40.60	**329.44**	**217.65**
SWCP 2x5515	30.00	**406.52**	**341.16**	1.00	30.00	**406.52**	**341.16**
SACP 2X5516	16.00	**189.08**	**149.83**	1.00	16.00	**189.08**	**149.83**
RRH2x60-AWS	55.00	**143.22**	**85.69**	1.00	55.00	**143.22**	**85.69**
PCS B25 RRH4x30	55.00	**89.68**	**70.85**	1.00	55.00	**89.68**	**70.85**

Dewberry

Job Number 50
Made by:
Date: 11
Checked by:
Date:

Reviewed for Code Compliance
Inspections Division
Approved with Conditions
Date: 10/05/17

Portland 5 ME - Wind Load (cont'd)

\\Essex\Projects\50002925\50085167\Tech\50085167 - Portland 5.xlsx

Wind Loading with Ice:

Members	Dimensions (ft.) Width (Normal)	Depth (Tangent)	Height (or span)	Area $(A_a)_n$ (Normal) (sf)	Area $(A_a)_t$ (Side) (sf)	Aspect Ratio (front)	Aspect Ratio (side)	C_a (front) Table 2-8	C_a (side) Table 2-8
SBNHH-1D65B	1.37	0.97	6.38	8.74	6.19	4.66	6.58	1.30	1.38
SWCP 2x5515	1.55	1.32	6.77	10.49	8.94	4.37	5.13	1.28	1.32
SACP 2X5516	1.10	0.92	5.05	5.56	4.65	4.59	5.49	1.29	1.33
RRH2x60-AWS	1.30	0.88	3.46	4.50	3.04	2.66	3.93	1.21	1.26
PCS B25 RRH4x30	1.38	1.17	2.21	3.05	2.59	1.60	1.89	1.20	1.20

Calculation of Design Forces / Members	$F_{(a)n}$ (lb) (Normal)	$F_{(a)t}$ (lb) (Tangent)	F_l (lb) (Normal)	F_l (lb) (Tangent)	# of Support	$F_{(a)n}$ Per Support (lb) or (plf)	$F_{(a)t}$ Per Support (lb) or (plf)
SBNHH-1D65B	**74.00**	**55.84**	**236.99**	**156.77**	1.00	**74.00**	**55.84**
SWCP 2x5515	**87.96**	**76.88**	**289.85**	**241.78**	1.00	**87.96**	**76.88**
SACP 2X5516	**46.93**	**40.46**	**141.43**	**114.13**	1.00	**46.93**	**40.46**
RRH2x60-AWS	**35.48**	**25.14**	**114.06**	**71.11**	1.00	**35.48**	**25.14**
PCS B25 RRH4x30	**23.91**	**20.27**	**72.93**	**60.16**	1.00	**23.91**	**20.27**

Antenna Wind Load per Spec. Sheet

- For analysis use Wind Load per Spec. Sheet when available

Spec. WL = 91 lb @ 93 mph → $\frac{91 \text{ lb}}{(93 \text{ mph})^2}$ = $\frac{\text{"?" lb}}{(100 \text{ mph})^2}$

Design WL = ? @ 100 mph

Total Design WL = 105 lb

Antenna	Spec WL@ 93mph	Spec WL@ 113mph	Design WL@ 100mph	
SBNHH-1D65B	139 lb	-	**161 lb**	*controls*
SWCP 2x5515	-	381 lb	**298 lb**	*controls*
SACP 2X5516	-	192 lb	**150 lb**	*controls*

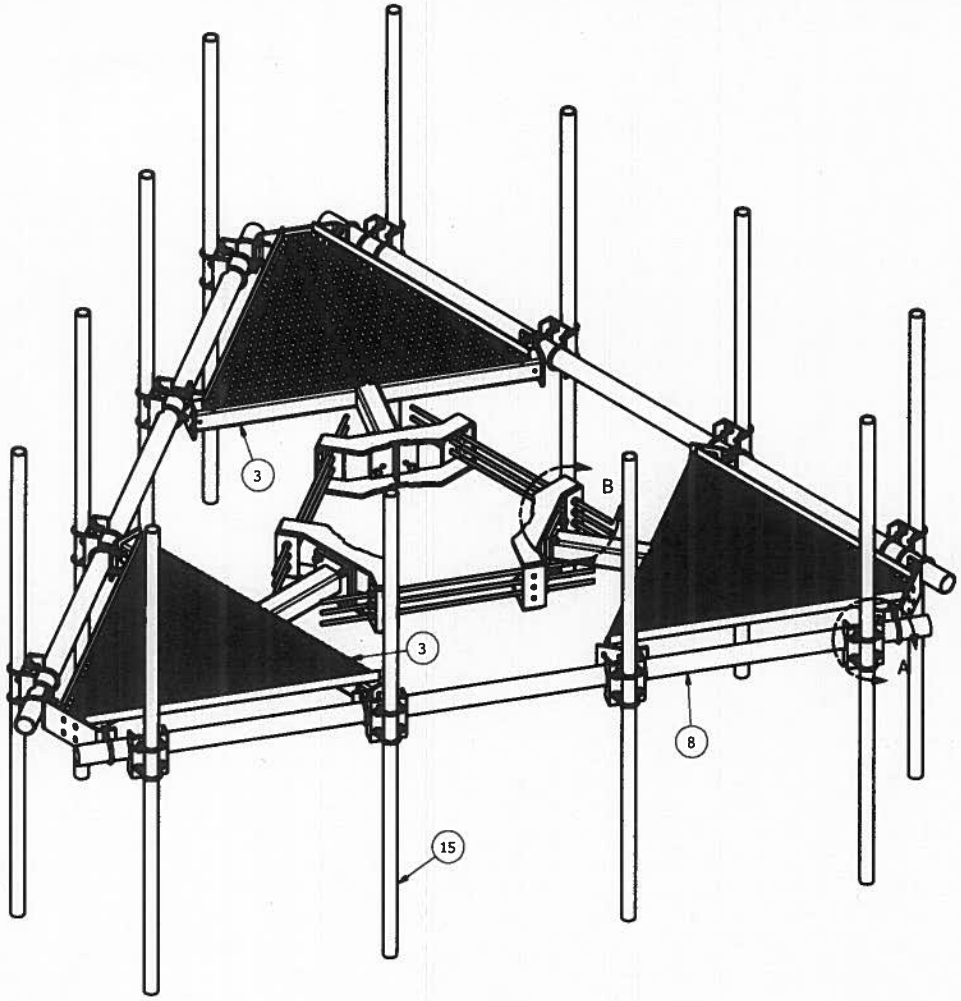

PARTS LIST						
ITEM	QTY	PART NO.	PART DESCRIPTION	LENGTH	UNIT WT.	NET WT.
1	3	X-LWRM	RING MOUNT WELDMENT		68.16	204.48
2	9	G58R-48	5/8" x 48" THREADED ROD (HDG.)		4.18	37.63
2	9	G58R-24	5/8" x 24" THREADED ROD (HDG.)		2.09	18.82
3	3	X-SV196	LOW PROFILE PLATFORM CORNER		212.10	636.31
4	12	A58234	5/8" x 2-3/4" HDG A325 HEX BOLT	2.75	0.36	4.27
5	12	A58FW	5/8" HDG A325 FLATWASHER		0.03	0.41
6	30	G58LW	5/8" HDG LOCKWASHER		0.03	0.78
7	30	A58NUT	5/8" HDG A325 HEX NUT		0.13	3.90
8	3	P3150	3-1/2" X 150" SCH 40 GALVANIZED PIPE	150.000 in	94.92	284.76
9	36	X-UB1306	1/2" X 3-5/8" X 6" X 3" U-BOLT (HDG.)		0.83	29.82
10	120	G12FW	1/2" HDG USS FLATWASHER		0.03	4.09
11	120	G12LW	1/2" HDG LOCKWASHER		0.01	1.67
12	120	G12NUT	1/2" HDG HEAVY 2H HEX NUT		0.07	8.60
13	12	X-SP219	SMALL SUPPORT CROSS PLATE	8.250 in	8.20	98.41
14	24	X-UB1212	1/2" X 2-1/2" X 4-1/2" X 2" U-BOLT (HDG.)		0.63	15.00
15	12	B	ANTENNA MOUNTING PIPE	C	D	E

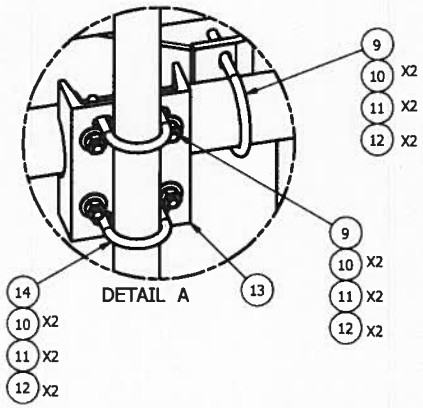

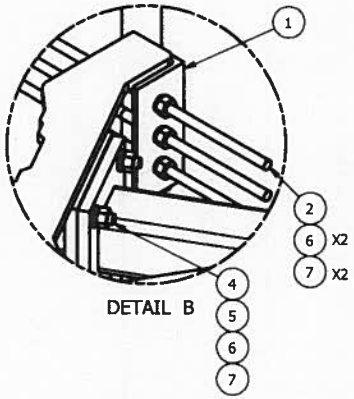

2-3/8" O.D. VERTICAL MOUNTING PIPES					
ASSEMBLY NO. "A"	PART NO. "B"	LENGTH, "C"	UNIT WEIGHT, "D"	NET WEIGHT, "E"	TOTAL WEIGHT
RMQP-463	P263	63"	20.18	242.16	1591.11
RMQP-472	P272	72"	23.07	276.84	1625.79
RMQP-484	P284	84"	26.91	322.92	1671.87
RMQP-496	P296	96"	30.76	369.12	1718.07

TOLERANCE NOTE

TOLERANCES ON DIMENSIONS, UNLESS OTHERWISE NOTED ARE:
SAWED, SHEARED AND GAS CUT EDGES (± 0.030")
DRILLED AND GAS CUT HOLES (± 0.030") - NO CONING OF HOLES
LASER CUT EDGES AND HOLES (± 0.010") - NO CONING OF HOLES
BENDS ARE ± 1/2 DEGREE - ALL OTHER MACHINING (± 0.030")
ALL OTHER ASSEMBLY (± 0.060")

PROPRIETARY NOTE

THE DATA AND TECHNIQUES CONTAINED IN THIS DRAWING ARE PROPRIETARY INFORMATION OF VALMONT INDUSTRIES AND CONSIDERED A TRADE SECRET. ANY USE OR DISCLOSURE WITHOUT THE CONSENT OF VALMONT INDUSTRIES IS STRICTLY PROHIBITED.

DESCRIPTION
LOW PROFILE CO-LOCATION PLATFORM
FOR 12 ANTENNAS WITH 12' 6" FACE WIDTH
FOR 12" - 38" DIAMETER POLES

SITE PRO 1
A valmont company

Engineering Support Team: 1-888-753-7446

Locations:
New York, NY
Atlanta, GA
Los Angeles, CA
Plymouth, IN
Salem, OR
Dallas, TX

DRAWN BY	CPD NO.	DRAWING USAGE	PART NO.
CEK 1/20/2012	4488	CUSTOMER	SEE ASSEMBLY N
ENG. APPROVAL	CHECKED BY		DWG. NO.
	BMC 1/23/2012		RMQP-4XX

Date: 10/05/17

Reviewed for Code Compliance
Inspections Division
Approved with Conditions

CITY OF PORTLAND, MAINE

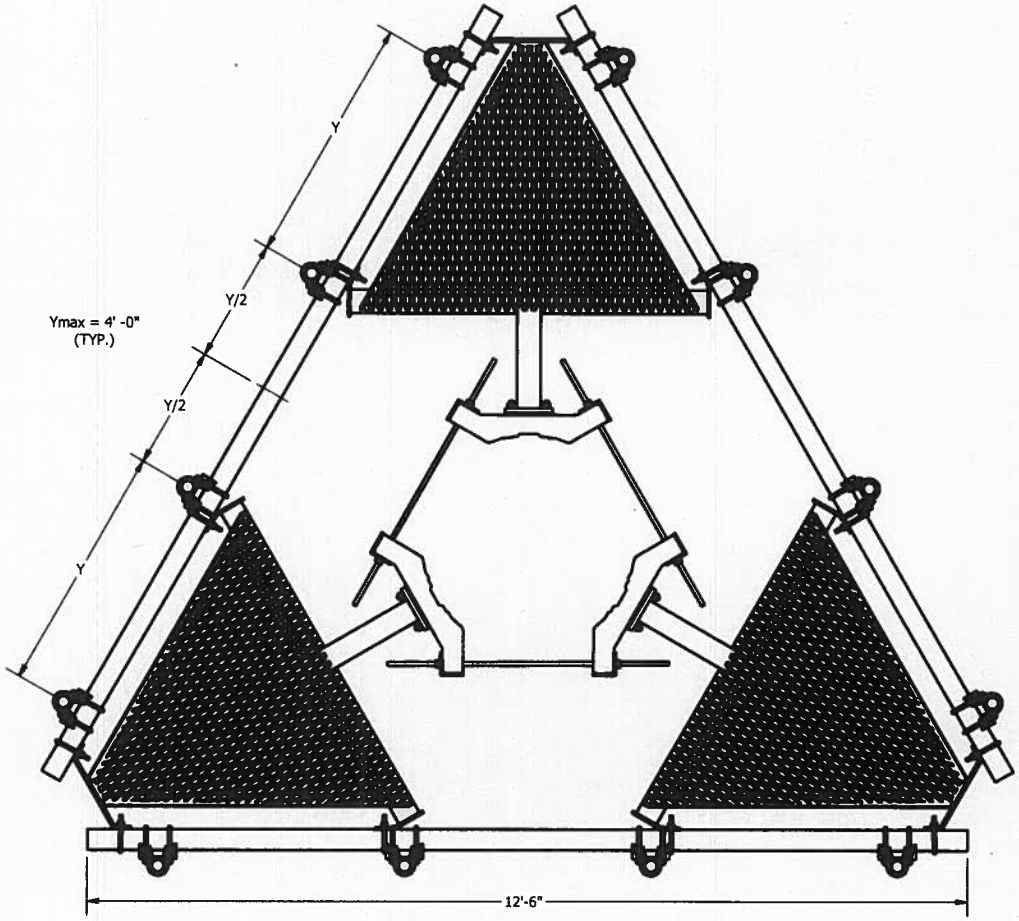

TOLERANCE NOTE

TOLERANCES ON DIMENSIONS, UNLESS OTHERWISE NOTED ARE:
SAWED, SHEARED AND GAS CUT EDGES (± 0.030")
DRILLED AND GAS CUT HOLES (± 0.030") - NO CONING OF HOLES
LASER CUT EDGES AND HOLES (± 0.010") - NO CONING OF HOLES
BENDS ARE ± 1/2 DEGREE - ALL OTHER MACHINING (± 0.030")
ALL OTHER ASSEMBLY (± 0.060")

PROPRIETARY NOTE

THE DATA AND TECHNIQUES CONTAINED IN THIS DRAWING ARE PROPRIETARY INFORMATION OF VALMONT INDUSTRIES AND CONSIDERED A TRADE SECRET. ANY USE OR DISCLOSURE WITHOUT THE CONSENT OF VALMONT INDUSTRIES IS STRICTLY PROHIBITED.

DESCRIPTION
LOW PROFILE CO-LOCATION PLATFORM
FOR 12 ANTENNAS WITH 12' 6" FACE WIDTH
FOR 12" - 38" DIAMETER POLES

DRAWN BY	CPD NO.	DRAWING USAGE
CEK 1/20/2012	4488	CUSTOMER

ENG. APPROVAL	CHECKED BY
	BMC 1/23/2012

SITE PRO
A valmont company

Engineering Support Team: 1-888-753-7446

Locations:
New York, NY
Atlanta, GA
Los Angeles, CA
Plymouth, IN
Salem, OR
Dallas, TX

PART NO. SEE ASSEMBLY N

DWG. NO. RMQP-4XX

Date: 10/05/17

Reviewed for Code Compliance
Inspections Division
Approved with Conditions

CITY OF PORTLAND, MAINE

Reviewed for Code Compliance
Inspections Division
Approved with Conditions
Date: 10/05/17

verizon wireless	PORTLAND_5_ME
	Antenna Design

Design Revision History

Rev #:	0
Date:	7/5/2016
Author:	Kevin Mosher
Revision(s):	Initial PCS LTE antenna design.

Date:	7/5/2016	Project Description:	-Remove (12) antennas and install (12) new antennas. -Add (3) PCS RRH.
RF Eng:	Kevin Mosher		
Site Name:	PORTLAND_5_ME		
Structure:	Monopole		

Reviewed for Code Compliance
Inspections Division
Approved with Conditions
Date: 10/05/17

700	ALPHA		BETA		GAMMA	
	EXISTING	NEW	EXISTING	NEW	EXISTING	NEW
Ant Vendor	SWEDCOM	COMMSCOPE	SWEDCOM	COMMSCOPE	SWEDCOM	COMMSCOPE
Ant Model	SWCP 2X5515	SBNHH-1D65B	SWCP 2X5515	SBNHH-1D65B	SWCP 2X5515	SBNHH-1D65B
Quantity	1	1	1	1	1	1
Centerline (feet)	119	119	119	119	119	119
Azimuth (ETN)	60	60	180	180	300	300
Tilt - Mechanical (- down, + up)	-8	0	-8	0	-8	0
Tilt - Electrical (- down, + up)	0	-6	0	-6	0	-6
Gain (dBd)	15.23	12.63	15.23	12.63	15.23	12.63
Horizontal BW	57.8	69.2	57.8	69.2	57.8	69.2
Vertical BW	12.8	12	12.8	12	12.8	12
Dimensions - L x W x H (in)	76.7 x 14 x 11.3	72 x 11.9 x 7.1	76.7 x 14 x 11.3	72 x 11.9 x 7.1	76.7 x 14 x 11.3	72 x 11.9 x 7.1
Weight (lbs)	30	40.6	30	40.6	30	40.6

850	ALPHA		BETA		GAMMA	
	EXISTING	NEW	EXISTING	NEW	EXISTING	NEW
Ant Vendor	SWEDCOM	COMMSCOPE	SWEDCOM	COMMSCOPE	SWEDCOM	COMMSCOPE
Ant Model	SWCP 2X5515	SBNHH-1D65B	SWCP 2X5515	SBNHH-1D65B	SWCP 2X5515	SBNHH-1D65B
Quantity	1	1	1	1	1	1
Centerline (feet)	119	119	119	119	119	119
Azimuth (ETN)	60	60	210	180	315	300
Tilt - Mechanical (- down, + up)	-9	0	-12	0	-9	0
Tilt - Electrical (- down, + up)	0	-6	0	-6	0	-6
Gain (dBd)	15.07	12.31	15.07	12.31	15.07	12.31
Horizontal BW	50.2	64.2	50.2	64.2	50.2	64.2
Vertical BW	10.8	10	10.8	10	10.8	10
Dimensions - L x W x H (in)	76.7 x 14 x 11.3	72 x 11.9 x 7.1	76.7 x 14 x 11.3	72 x 11.9 x 7.1	76.7 x 14 x 11.3	72 x 11.9 x 7.1
Weight (lbs)	30	40.6	30	40.6	30	40.6

PCS CDMA	ALPHA		BETA		GAMMA	
	EXISTING	NEW	EXISTING	NEW	EXISTING	NEW
Ant Vendor						
Ant Model						
Quantity						
Centerline (feet)						
Azimuth (ETN)						
Tilt - Mechanical (- down, + up)						
Tilt - Electrical (- down, + up)						
Gain (dBd)						
Horizontal BW						
Vertical BW						
Dimensions - L x W x H (in)						
Weight (lbs)						

AWS	ALPHA		BETA		GAMMA	
	EXISTING	NEW	EXISTING	NEW	EXISTING	NEW
Ant Vendor	SWEDCOM	COMMSCOPE	SWEDCOM	COMMSCOPE	SWEDCOM	COMMSCOPE
Ant Model	SACP 2X5516	SBNHH-1D65B	SACP 2X5516	SBNHH-1D65B	SACP 2X5516	SBNHH-1D65B
Quantity	2	1	2	1	2	1
Centerline (feet)	119	119	119	119	119	119
Azimuth (ETN)	60	60	180	180	300	300
Tilt - Mechanical (- down, + up)	-4	0	-4	0	-4	0
Tilt - Electrical (- down, + up)	0	-3	0	-3	0	-3
Gain (dBd)	16.61	16.45	16.61	16.45	16.61	16.45
Horizontal BW	53.5	60.8	53.5	60.8	53.5	60.8
Vertical BW	6	5.2	6	5.2	6	5.2
Dimensions - L x W x H (in)	56 x 8.6 x 6.5	72 x 11.9 x 7.1	56 x 8.6 x 6.5	72 x 11.9 x 7.1	56 x 8.6 x 6.5	72 x 11.9 x 7.1
Weight (lbs)	16	40.6	16	40.6	16	40.6

PCS LTE	ALPHA		BETA		GAMMA	
	EXISTING	NEW	EXISTING	NEW	EXISTING	NEW
Ant Vendor		COMMSCOPE		COMMSCOPE		COMMSCOPE
Ant Model		SBNHH-1D65B		SBNHH-1D65B		SBNHH-1D65B
Quantity		1		1		1
Centerline (feet)		119		119		119
Azimuth (ETN)		60		180		300
Tilt - Mechanical (- down, + up)		0		0		0
Tilt - Electrical (- down, + up)		-3		-3		-3
Gain (dBd)		15.8		15.8		15.8
Horizontal BW		55		55		55
Vertical BW		5.2		5.2		5.2
Dimensions - L x W x H (in)		72 x 11.9 x 7.1		72 x 11.9 x 7.1		72 x 11.9 x 7.1
Weight (lbs)		40.6		40.6		40.6

GPS		
	GPS Vendor	PCTel
	GPS Model	GPS-TMG-HR-26NCM
	Quantity	1

Reviewed for Code Compliance
Inspections Division
Approved with Conditions
Date: 10/05/17

RF Coax	ALPHA		BETA		GAMMA	
	EXISTING	NEW	EXISTING	NEW	EXISTING	NEW
Main Line #1 - Diameter						
Main Line #1 - Quantity						
Main Line #2 - Diameter						
Main Line #2 - Quantity						
# of Jumpers (At Antennas)	6	**10**	6	**10**	6	**10**
# of Jumpers (At Equipment)						

Splitters/Diplexers	ALPHA		BETA		GAMMA	
	EXISTING	NEW	EXISTING	NEW	EXISTING	NEW
At Antennas - Vendor						
At Antennas - Model						
At Antennas - Quantity						
At Equipment - Vendor						
At Equipment - Model						
At Equipment - Quantity						

LTE RRH	ALPHA		BETA		GAMMA	
	EXISTING	NEW	EXISTING	NEW	EXISTING	NEW
LTE 700 - Model	RRH2x40-07U	**RRH2x40-07U**	RRH2x40-07U	**RRH2x40-07U**	RRH2x40-07U	**RRH2x40-07U**
LTE 700 - Quantity	1	**1**	1	**1**	1	**1**
LTE 700 - Size (L x W x D) (in)	20 x 17 x 10	**20 x 17 x 10**	20 x 17 x 10	**20 x 17 x 10**	20 x 17 x 10	**20 x 17 x 10**
LTE 700 - Weight Installed (lbs)	51	**51**	51	**51**	51	**51**
LTE 850 - Model						
LTE 850 - Quantity						
LTE 850 - Size (L x W x D) (in)						
LTE 850 - Weight Installed (lbs)						
LTE 2100 - Model	RRH2x60-AWS	**RRH2x60-AWS**	RRH2x60-AWS	**RRH2x60-AWS**	RRH2x60-AWS	**RRH2x60-AWS**
LTE 2100 - Quantity	1	**1**	1	**1**	1	**1**
LTE 2100 - Size (L x W x D) (in)	37 x 11 x 6	**37 x 11 x 6**	37 x 11 x 6	**37 x 11 x 6**	37 x 11 x 6	**37 x 11 x 6**
LTE 2100 - Weight Installed (lbs)	55	**55**	55	**55**	55	**55**
LTE 1900 - Model		**B25 RRH4x30-4R**		**B25 RRH4x30-4R**		**B25 RRH4x30-4R**
LTE 1900 - Quantity		**1**		**1**		**1**
LTE 1900 - Size (L x W x D) (in)		**22 x 12 x 9.5**		**22 x 12 x 9.5**		**22 x 12 x 9.5**
LTE 1900 - Weight Installed (lbs)		**55**		**55**		**55**

RRH Feeder System	EXISTING	NEW
Hybrid 6x12 Cable - Quantity	2	**2**
Hybrid 4x8 Cable - Quantity	0	**0**
Hybrid 1x1 Jumper - Quantity	6	**9**

	EXISTING	NEW
Raycap DB-B1-6C-12AB-0Z (lg box w/surge) - Quantity	2	**2**
Raycap DB-T1-6Z-12AB-0Z (lg box w/out surge) - Quantity	0	**0**
Raycap DB-E1-2C-4AB-0Z (sm box w/surge) - Quantity	0	**0**
Raycap Rack-Mount OVP - Quantity	2	**2**

RRH Diagram

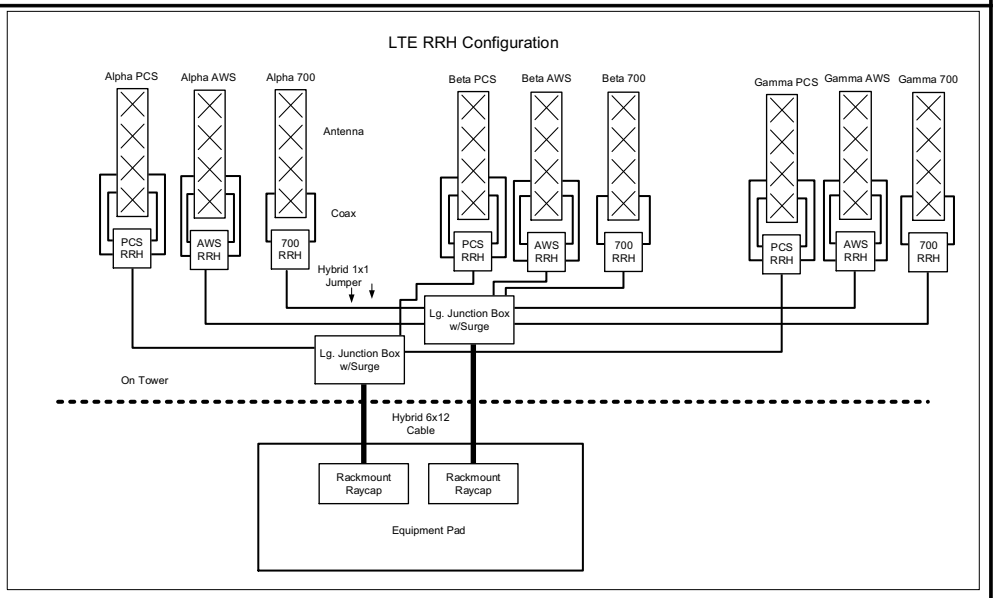

Reviewed for Code Compliance
Inspections Division
Approved with Conditions
Date: 10/05/17

RET System	ALPHA		BETA		GAMMA	
	EXISTING	NEW	EXISTING	NEW	EXISTING	
# of Main AISG Cable (at antennas only)		3		3		
# of Main AISG Cable (in shelter only)		0		0		
# of Main AISG Cable (home run from shelter to antennas)		0		0		0
# of Bias-Ts at Antennas		0		0		0
# of Bias-Ts in Shelter		0		0		0
# of AISG Jumpers - To Same Antenna		0		0		0
# of AISG Jumpers - To Different Antenna, Same Sector		1		1		1
# of AISG Jumpers - To Different Antenna, Different Sector		0		0		0

RET System Diagram	LEGEND			
	A	Main AISG cable	1	RRH/Bias-T connector point
	B	Same antenna AISG jumper	2	1st AISG imput
	C	Different antenna (same sector) AISG jumper	3, 5, 7, …	AISG output to jumper
			4, 6, 8, …	AISG input from jumper
	D	Sector to sector AISG jumper		

RET System Configuration
All Sectors

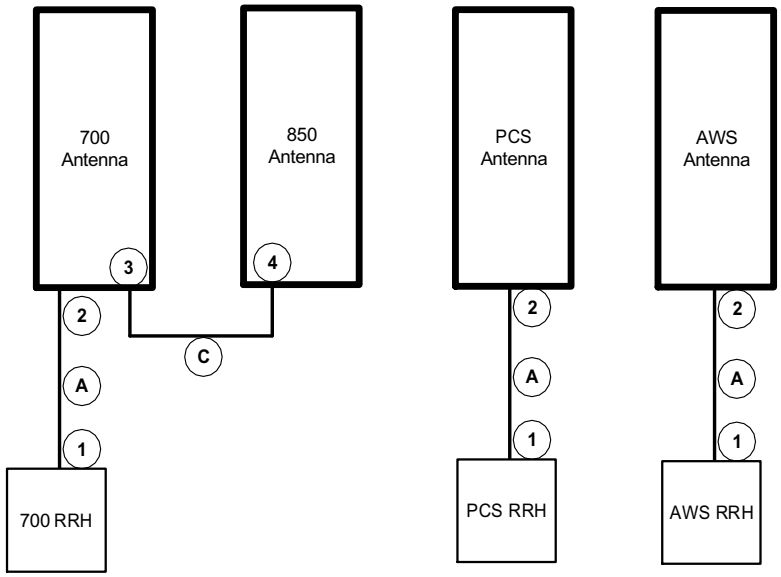

Reviewed for Code Compliance
Inspections Division
Approved with Conditions
Date: 10/05/17

Color Codes

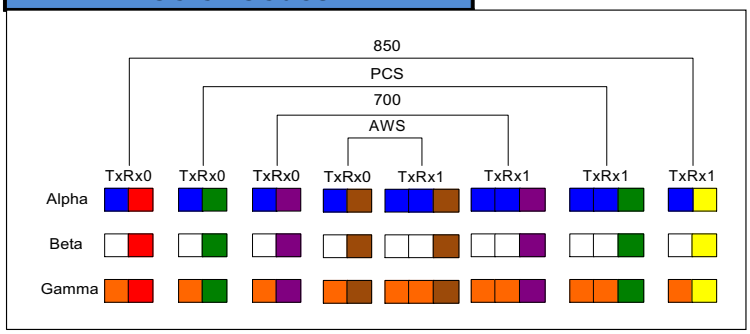

Antenna Array Layout

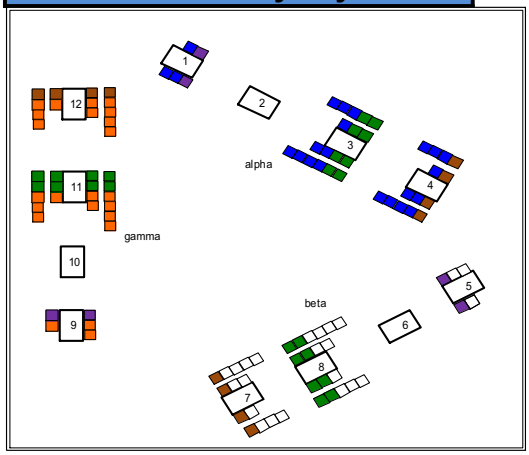

Alpha	
New Antenna #1:	SBNHH-1D65B
New Antenna #2:	SBNHH-1D65B
New Antenna #3:	SBNHH-1D65B
New Antenna #4:	SBNHH-1D65B

Beta	
New Antenna #5:	SBNHH-1D65B
New Antenna #6:	SBNHH-1D65B
New Antenna #7:	SBNHH-1D65B
New Antenna #8:	SBNHH-1D65B

Gamma	
New Antenna #9:	SBNHH-1D65B
New Antenna #10:	SBNHH-1D65B
New Antenna #11:	SBNHH-1D65B
New Antenna #12:	SBNHH-1D65B

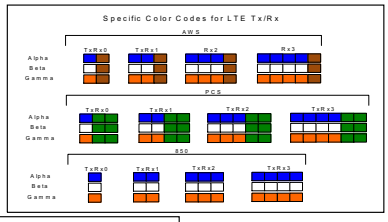

Antenna System Layout

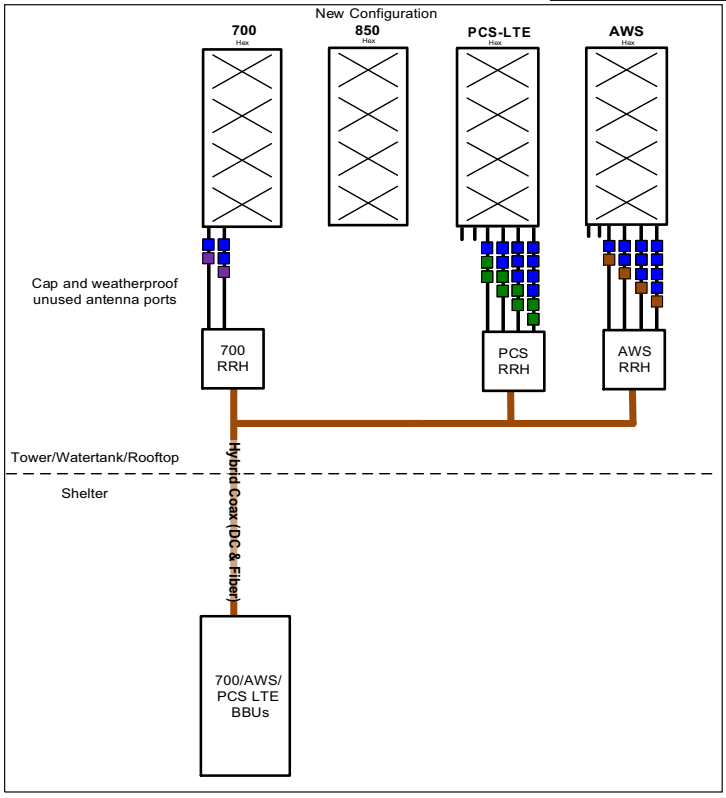

View is from behind antenna array looking outwards

Please evenly space antennas across each sector.

For Xpol antennas, BR/BG/BP are connected to the +45 port, and BY/BBG/BBP are connected to the -45 port.

For Circular Pole antennas, BR/BG/BP are connected to the Clockwise port, and BY/BBG/BBP are connected to the Counter-Clockwise port.

CITY OF PORTLAND, MAINE
RESURGAM
Reviewed for Code Compliance
Inspections Division
Approved with Conditions
Date: 10/05/17

Swedi

SWCP 2x5515

698 - 896 MHz Dual (2x) CP log-periodic antenna

Features

- Transmit Diversity Gain
- Can be configured to combine space & polarization diversity
- Outstanding performance over the entire band (698 - 896 MHz)
- Excellent Axial Ratio
- Optimized for 4G & 3G systems
- Low intermodulation
- Improved Side-to-side rejection
- Fading reduction
- Excellent isolation between ports

Electrical specifications

Frequency range:	698 - 896 MHz	
Impedance:	50 ohm	
Connector type:	7/16 Din	
Return loss:	18 dB	
Polarization:	Circular	
Gain ea. port [Circular]:	2x15 dBdC	
Gain ea. port [Linear]:	2x12 dBdL	
Axial Ratio:	2 dB	
Isolation between ports (TX band):	30 dB	
Front-to-back ratio:	30 dB	
Intermodulation (2x20W):	IM3	150 dB
	IM5	160 dB
	IM7/9	170 dB
Power rating:	2x 500 W	
H-plane (-3 dB point):	2x 55°	
V-plane (-3 dB point):	2x 11°	
Lightning protection:	DC grounded	

Mechanical specifications

Overall height:	76.7 in	[1948 mm]
Width:	14 in	[356 mm]
Depth:	11.3 in	[287 mm]
Weight (excluding brackets):	30 lbs	[13.5 Kg]
Wind load measured up to:	150 mph	[240 Km/h]
Wind area (front of antenna):	7.46 sq. ft.	[0.69 sq.m]
Lateral thrust at 113 mph/ 180 Km/h (worst case):	381 lbs	[1694 N]

Materials

Radiating Elements:	Aluminum
Transformer (Power distribution)	Ceramic PCB
Chassis:	Aluminum
Radome:	Gray PVC/TPO
Mounting bolts:	Stainless steel

The SWCP 2x5515 is made in the U.S.A.

CITY OF PORTLAND, MAINE
RESURGAM
Reviewed for Code Compliance
Inspections Division
Approved with Conditions
Date: 10/05/17

Swedl

SACP 2x5516

1710 -2170 MHz Dual (2x) CP log-periodic antenna

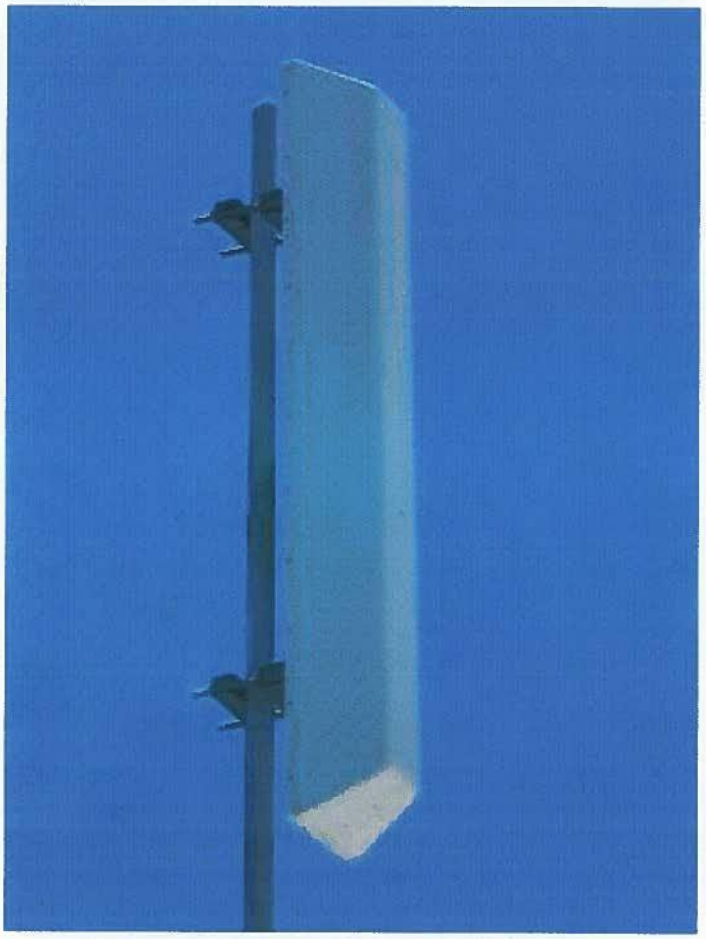

Features

- Transmit Diversity Gain
- Can be configured to combine space & polarization diversity
- Outstanding performance over the entire band (1710 - 2170 MHz)
- Excellent Axial Ratio
- Optimized for 4G & 3G systems
- Low intermodulation
- Improved Side-to-side rejection
- Fading reduction
- Excellent isolation between ports

Electrical specifications

Frequency range:	1710-2170 MHz	
Impedance:	50 ohm	
Connector type:	7/16 Din	
Return loss:	18 dB	
Polarization:	Circular	
Gain ea. port [Circular]:	2x16 dBdC	
Gain ea. port [Linear]:	2x13 dBdL	
Axial Ratio:	2 dB	
Isolation between ports (TX band):	28 dB	
Front-to-back ratio:	30 dB	
Intermodulation (2x20W):	IM3	150 dB
	IM5	160 dB
	IM7/9	170 dB
Power rating:	2x 300 W	
H-plane (-3 dB point):	2x 55°	
V-plane (-3 dB point):	2x 7°	
Lightning protection:	DC grounded	

Mechanical specifications

Overall height:	56 in	[1422 mm]
Width:	9.7 in	[246 mm]
Depth:	5.5 in	[140 mm]
Weight (excluding brackets):	16 lbs	[7.2 Kg]
Wind load measured up to:	150 mph	[240 Km/h]
Wind area (front of antenna):	3.76 sq. ft.	[0.35 sq.m]
Lateral thrust at 113 mph/ 180 Km/h (worst case):	192 lbs	[855 N]

Materials

Radiating Elements:	Silver plated brass
Transformer (Power distribution)	Ceramic PCB
Chassis:	Aluminum
Radome:	PVC/TPO
Mounting bolts:	Stainless steel

The SACP 2x5516 is made in the U.S.A.