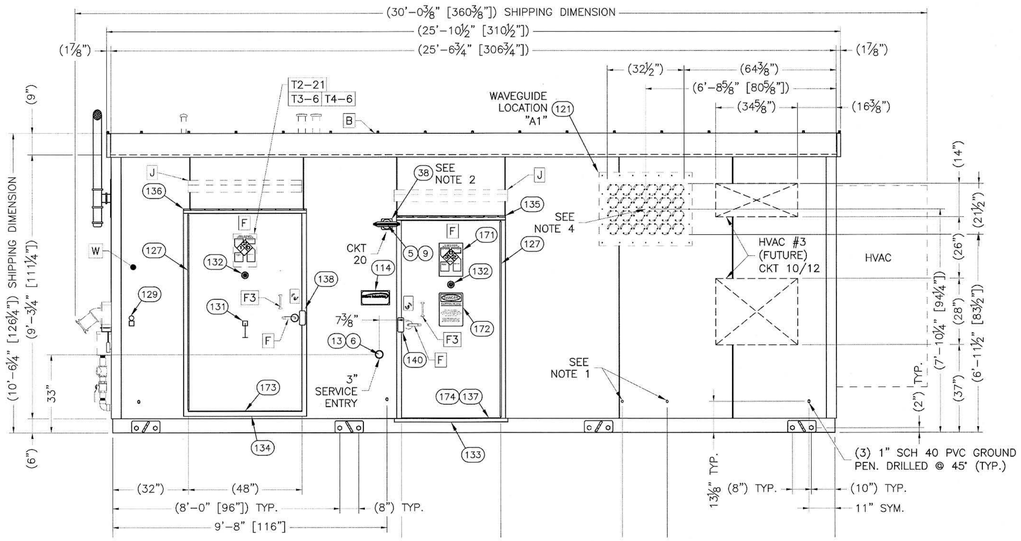


EXTERIOR ELEVATION "A"

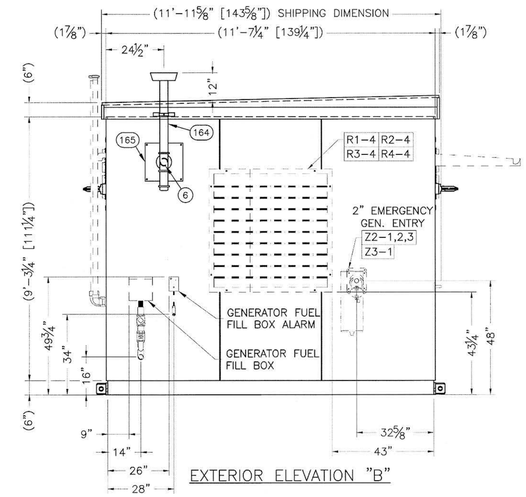


EXTERIOR ELEVATION "B"

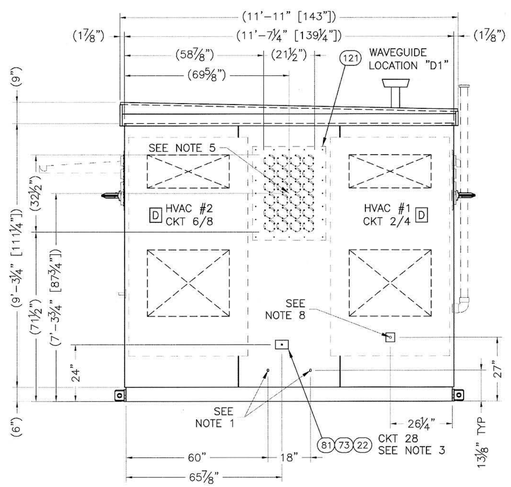


EXTERIOR ELEVATION "D"

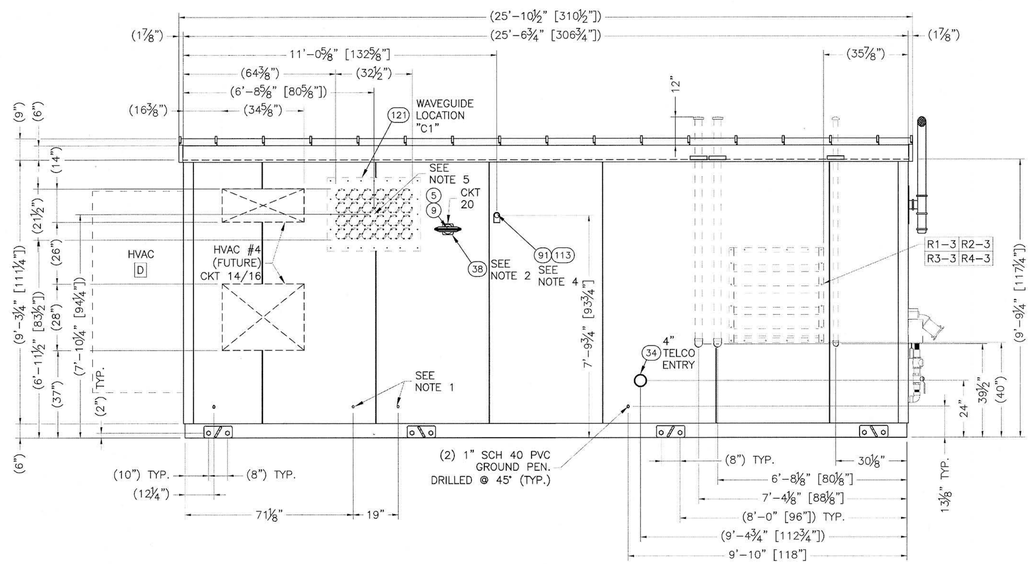


EXTERIOR ELEVATION "C"

ORIGINAL SIZE IN INCHES


verizon wireless
400 FRIBERG PARKWAY
WESTBOROUGH, MA 01581
PHONE: (508) 330-3300
FAX: (781) 481-1396

amec
343 Gorham Road, South Portland ME 04106
P: (207) 781-1770 F: (207) 774-1246 www.amec.com


PROJECT COORDINATION BY:

SURVEYOR

STATE OF MAINE MICHAEL S. DELETETSKY No. 5023 LICENSED PROFESSIONAL ENGINEER

2 May 2014

| | |
|---|---|
| PROJECT NO: | 3618148351 |
| DRAWN BY: | CBM |
| RELEASED BY: | MSD |

SUBMITTALS

| | | |
|---|---|---|
| 0 | 5/2/14 | ISSUED FOR CONSTRUCTION |

PORTLAND 5
20130930169

52 CANCO ROAD
PORTLAND, ME 04103

SHEET TITLE

SHELTER ELEVATIONS PLAN

SHEET NUMBER

D-2

Reviewed for Code Compliance Inspection Division Approved as Noted

Date: 09/29/14