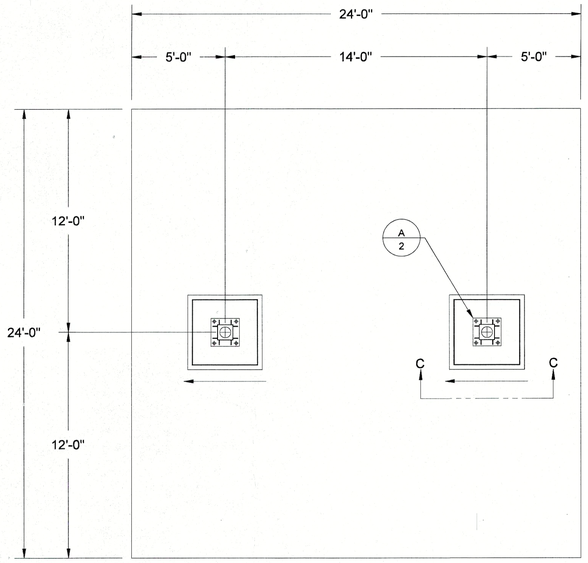


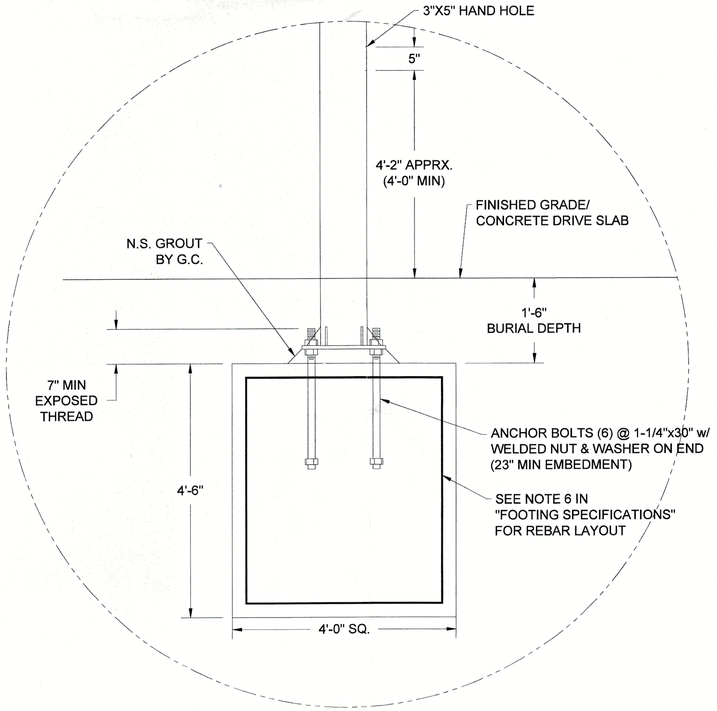


**SECTION C-C**

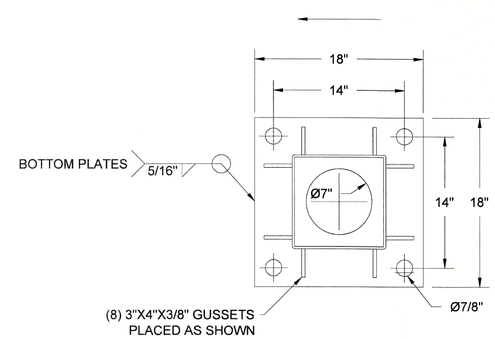


**DETAIL A**
**BASEPLATE DETAIL**
**18X18X3/4"**

**KEY:**

C — DETAIL LETTER
3 — SHEET

# FOOTING SPECIFICATIONS:

1) OWNER / GENERAL CONTRACTOR SHALL BE RESPONSIBLE FOR FOOTING AND ANCHOR BOLT INSTALLATION

2) ALL FOOTINGS SHALL BE CAST ON LEVEL, UNDISTURBED SOIL OR ROCK OR PROPERLY COMPACTED SUBGRADE. BOTTOM OF FOOTING TO BE ABOVE WATER TABLE. FOOTING BASED ON MINIMUM 2,500 PSF SOIL BEARING CAPACITY AND 250 PSF PER FOOT OF DEPTH LATERAL BEARING CAPACITY. OWNER/GENERAL CONTRACTOR SHALL BE RESPONSIBLE FOR VERIFYING ALL SOIL PARAMETERS.

3) FOOTING CONCRETE SHALL HAVE A MINIMUM 28 DAY COMPRESSIVE STRENGTH OF 3000 PSI. FOOTING DESIGN SHALL BE IN ACCORDANCE WITH ACI 318.

4) THE TOPS OF ALL FOOTINGS MUST BE AT THE SAME ELEVATION, OWNER / GENERAL CONTRACTOR SHALL PROVIDE BURIAL DEPTH FROM HIGH GRADE UNDER CANOPY. WHERE THE TOP OF THE FOOTINGS ARE AT DIFFERENT ELEVATIONS, THE OWNER / GENERAL CONTRACTOR SHALL PROVIDE THE CANOPY MANUFACTURER WITH ALL FOOTING AND GRADE ELEVATIONS PRIOR TO CANOPY FABRICATION. VARIATIONS IN DESIGN ELEVATIONS MAY RESULT IN INADEQUATE CLEARANCE AND UNDER SIZED FOOTINGS.

5) OWNER / GENERAL CONTRACTOR SHALL BE RESPONSIBLE FOR PLACING NON-SHRINK GROUT UNDER ALL COLUMN BASES AFTER CANOPY IS LEVELED AND SECURED.

6) FOOTING REINFORCING STEEL SHALL BE ASTM A615 GRADE 60 DEFORMED BILLETSTEEL BARS. TOP AND BOTTOM REBAR MATS SHALL BE A TWO WAY GRID OF #4 REBARS WITH A MAXIMUM OF 8" SPACING AND 3" MINIMUM COVER FROM THE FACES OF THE FOOTING. VERTICAL SUPPORT BARS MAY BE PROVIDED AT CORNERS AND CENTER OF EACH FACE IF REQUIRED.

7) FOOTINGS ARE ASSUMED TO BE CONSTRAINED BY CONCRETE FUEL ISLAND AND /OR CONCRETE DRIVE SLAB AT GRADE. WHERE THIS CONDITION DOES NOT EXIST, THE OWNER SHALL NOTIFY CANOPY FABRICATOR.

8) ANCHOR BOLTS SHALL BE PLACED IN ACCORDANCE WITH THIS DRAWING. TEMPLATES SHALL BE USED TO ENSURE PROPER PLACEMENT OF ANCHOR BOLTS. ANCHOR BOLTS ARE TO BE INSTALLED SUCH THAT A MINIMUM OF 7" OF THREAD IS EXPOSED ABOVE TOP OF FOOTING. BOTTOM OF THREADS SHALL NOT END MORE THAN 3/4" ABOVE TOP OF FOOTER.


AUSTIN MOHAWK
engineered building systems

AUSTIN MOHAWK & CO., LLC.
2175 BEECHGROVE PLACE
UTICA, NY 13501
PHONE: 315.793.3000
TOLL FREE: 1.800.765.3110
FAX: 315.793.9370
WEBSITE: www.austinmohawk.com
E-MAIL: info@austinmohawk.com


CERTIFIED BY:


LAWRENCE R. PILON, PE
51 MAPLEVIEW DRIVE
PENNELLVILLE, NY 13132
LICENSE # _____


STATE OF MAINE
Lawrence R. Pilon
8292
LICENSED PROFESSIONAL ENGINEER
5/4/17

JOB # -

| QUOTE # | DRAWING # |
|---|---|
| Q0170490 | 17-039 |

24'-0" X 24'-0" X 2 COLUMN CANOPY

CUSTOMER:
CUMBERLAND FARMS, INC.

LOCATION: PORTLAND, ME

| SCALE: N.T.S. | DRAWN BY: DBIII |
|---|---|
| DATE: 04.28.17 | SHEET: 2 OF 3 |


Notice - Austin Mohawk & Co., LLC claims proprietary rights in the information disclosed on this drawing. It is issued in confidence for engineering information only and may not be used, in whole or in part, to manufacture anything whether or not shown hereon, reproduced or disclosed to anyone without direct written permission from Austin Mohawk LLC