System No. W-L-1085
F Rating – 1 and 2 Hr (See Item 18)
T Rating – 0 Hr
L Rating At Ambient – Less Than 1 CFM/Sq Ft
L Rating At 400 F – 4 CFM/Sq Ft

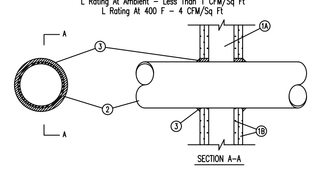

1. Wall Assembly The 1 or 2 hr fire-rated gypsum wallboard/stud wall assembly shall be constructed of the materials and in the manner specified in the individual U300 or U400 Series Wall and Partition Designs in the UL Fire Resistance Directory and shall include the following construction features:
   A. Studs Wall framing may consist of either wood studs or steel channel studs. Wood studs to consist of nom 2 by 4 in. lumber spaced 16 in. OC. Steel studs to be min 2-1/2 in. wide and spaced max 24 in. OC.
   B. Gypsum Board* 5/8 in. thick, 4 ft wide with square or tapered edges. The gypsum wallboard type, number of layers, fastener type and sheet orientation shall be as specified in the individual Wall and Partition Designs. Max diam of opening is 13-1/24 in.
   Other penetrants passing through the through-penetrant on each side of wall assembly to be min 1/4 in. to max 1/2 in. larger than outside diam of through penetrant (Item 2). The hourly F Rating of the firestop system is equal to the hourly fire rating of the wall assembly in which it is installed.
2. Through Penetrants One metallic pipe, conduit or tubing to be installed either concentrically or eccentrically within the firestop system. Pipe, conduit or tubing to be rigidly supported on both sides of wall assembly. The annular space between the through-penetrant and the periphery of the opening shall be min 0 in. to max 1/4 in. The following types and sizes of metallic pipes, conduits or tubing may be used:
   A. Steel Pipe Nom 12 in. diam (or smaller) Schedule 10 (or heavier) steel pipe.
   B. Iron Pipe Nom 12 in. diam (or smaller) cast or ductile iron pipe.
   C. Conduit – Nom 4 in. diam (or smaller) steel electrical metallic tubing or steel conduit.
   D. Copper Tubing Nom 6 in. diam (or smaller) Type L (or heavier) copper tubing
   E. Copper Pipe Nom 6 in. diam (or smaller) Regular (or heavier) copper pipe.
3. FR, Void or Cavity Material* — Sealant Fill material to be forced into the annulus to maximum extent possible. Additional fill material to be installed such that a min 1/2 in. crown is formed around the penetrating item and topping 1/4 in. beyond the periphery of the opening.
   HILTI CONSTRUCTION CHEMICALS, INC OF
   HILTI INC — FS-ONE Sealant
*Meeting the UL Classification Marking

HILTI FIRESTOP SYSTEMS

Reproduced by HILTI, Inc. Courtesy of Underwriters Laboratories, Inc. November 24, 1999

System No. W-J-1042
F Rating – 4 Hr
T Rating – 0 Hr

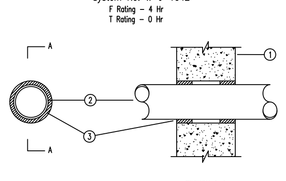

1. Wall Assembly – Min 7-5/8 in. thick wall assembly constructed of any UL Classified Concrete Block* Min 4 hr fire rated wall. Max diam of opening is 13-5/8 in.
   *See Concrete Blocks (CAZT) category in the Fire Resistance Directory for names of manufacturers.
2. Through Penetrants One metallic pipe, conduit or tubing to be installed concentrically within the firestop system. Pipe, conduit or tubing to be rigidly supported on both sides of wall assembly. The annular space between pipe, conduit or tubing and the periphery of the opening shall be min 0 in. to 1/2 in. maximum. The following types and sizes of metallic pipes, conduits or tubing may be used:
   A. Steel Pipe – Nom 12 in. diam (or smaller) Schedule 10 (or heavier) steel pipe.
   B. Conduit – Nom 4 in. diam (or smaller) steel electrical metallic tubing or E. Dr. diam steel conduit.
   C. Iron Pipe – Nom 12 in. diam (or smaller) Type L (or heavier) copper tubing.
   D. Copper Pipe – Nom 6 in. diam (or smaller) Regular (or heavier) copper pipe.
4. FR, Void or Cavity Material* – Sealant – Min. 2 in. thickness applied within annular space, flush with both surfaces of wall.
   HILTI CONSTRUCTION CHEMICALS, INC OF
   HILTI, INC. – FS-ONE Sealant
*Bearing the UL Classification Marking

HILTI FIRESTOP SYSTEMS

Reproduced by HILTI, Inc. Courtesy of Underwriters Laboratories, Inc. APRIL 07, 1997

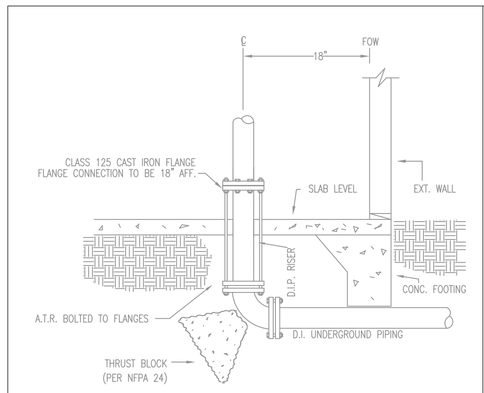

UNDERGROUND STUB UP W/ ROD
SCALE: NONE

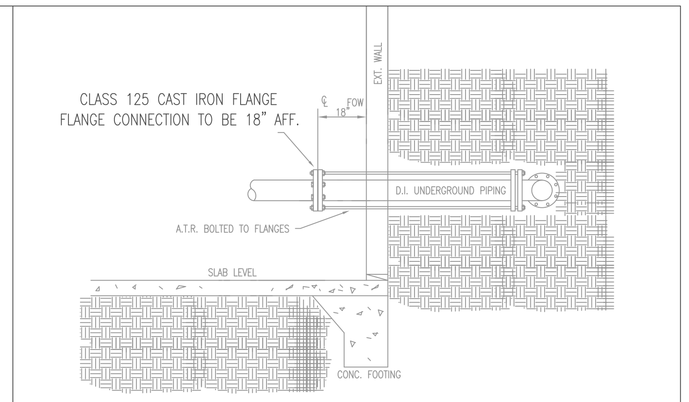

UNDERGROUND THROUGH WALL W/ ROD
SCALE: NONE

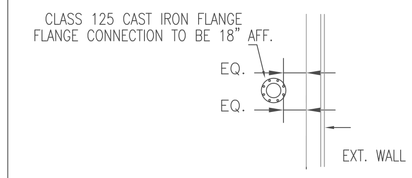

TWO-HOLE DETAIL

THE TWO BOLT HOLES CLOSEST TO THE WALL ARE TO BE PARALLEL

4" D.I.C.L. Pipe	=	390 GPM
6" D.I.C.L. Pipe	=	880 GPM
8" D.I.C.L. Pipe	=	1560 GPM
10" D.I.C.L. Pipe	=	2440 GPM
12" D.I.C.L. Pipe	=	3520 GPM

FLUSHING FLOW RATES

UNDERGROUND LEAD-INS ARE TO BE RODDED, PLUMBED, TWO-HOLED, FLUSHED AND TESTED. TEST CERTIFICATE TO BE PROVIDED TO HAMPSHIRE FIRE PROTECTION PRIOR TO CONNECTION.

UNDERGROUND DETAIL

NOT TO SCALE

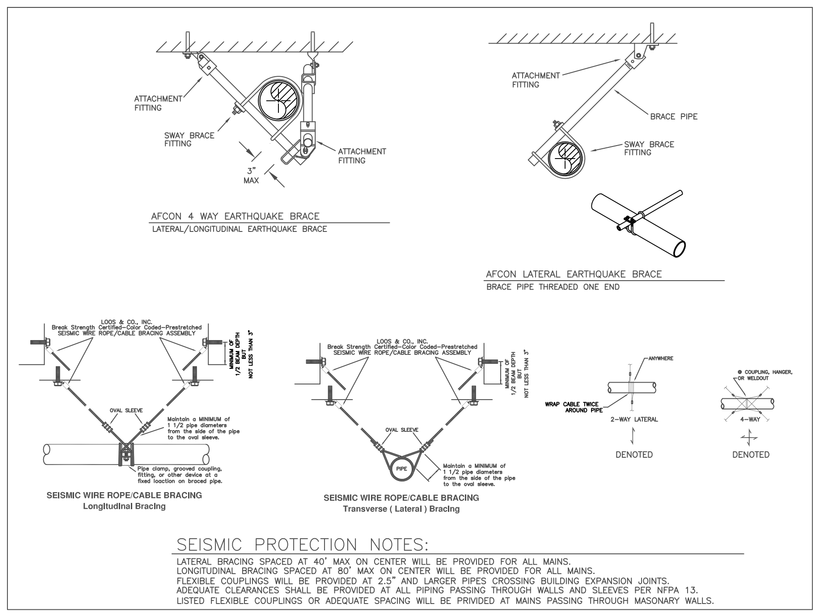

SEISMIC PROTECTION NOTES:

LATERAL BRACING SPACED AT 40' MAX ON CENTER WILL BE PROVIDED FOR ALL MAINS.
LONGITUDINAL BRACING SPACED AT 80' MAX ON CENTER WILL BE PROVIDED FOR ALL MAINS.
FLEXIBLE COUPLINGS WILL BE PROVIDED AT 2.5" AND LARGER PIPES CROSSING BUILDING EXPANSION JOINTS.
ADEQUATE CLEARANCES SHALL BE PROVIDED AT ALL PIPING PASSING THROUGH WALLS AND SLEEVES PER NFPA 13.
LISTED FLEXIBLE COUPLINGS OR ADEQUATE SPACING WILL BE PROVIDED AT MAINS PASSING THROUGH MASONARY WALLS.

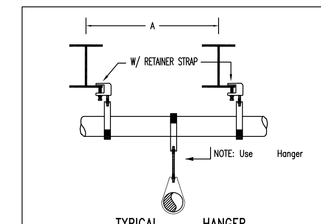

TYPICAL HANGER
NO SCALE
1 -- Pipe (Length = A + 6")
2 -- 3/8" Top Beam Clamp
2 -- 3/8" x 4" All Thread Rod
3 -- Ring

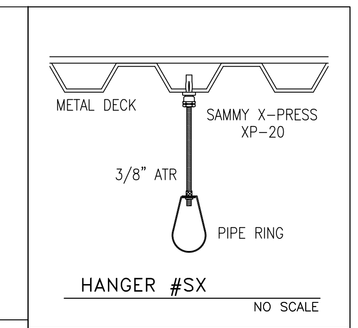

HANGER #SX
NO SCALE

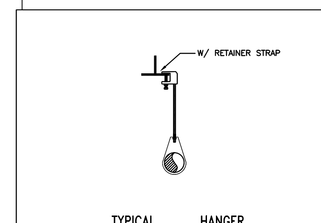

TYPICAL HANGER
NO SCALE
1 -- All Thread Rod
1 -- Ring
1 -- Top Beam Clamp

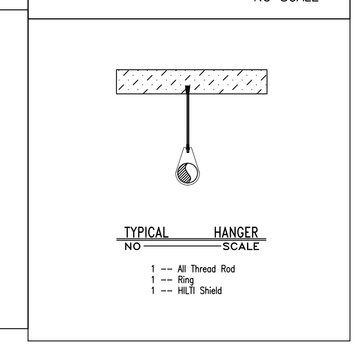

TYPICAL HANGER
NO SCALE
1 -- All Thread Rod
1 -- Ring
1 -- HILTI Shield

1) 6" Mains:
   Lateral Brace – 13.25 lbs. per ft. x 40'–0" = 530.0 lbs. x 1.4 (ICB factor) = 742.0 lbs to be braced
   Longitudinal Brace – 13.25 lbs. per ft. x 40'–0" = 530.0 lbs. x 1.4 (IBC factor) = 742.0 lbs. to be braced
   Use Loos & Co. #18B or #18C looped connection
   (#18 cable max load is 550 lbs. for 30', 778 lbs. for 45' and 952 lbs. for 60')
2) 4" Mains:
   Lateral Brace – 4.66 lbs. per ft. x 40'–0" = 270.9 lbs. x 1.4 (ICB factor) = 397.3 lbs to be braced
   Longitudinal Brace – 6.77 lbs. per ft. x 40'–0" = 270.9 lbs. x 1.4 (IBC factor) =397.3 lbs. to be braced
   Use Loos & Co. #18B or #18C looped connection
   (#18 cable max load is 550 lbs. for 30', 778 lbs. for 45' and 952 lbs. for 60')
3) 3" MAIN:
   LATERAL BRACE – 3.18 LBS PER FT. x 40'–0" = 127.04 LBS TO BE BRACED
   2" LINE PIPING – 1.67 LBS PER FT. x 84'–0" = 140.28 LBS TO BE BRACED
   TOTAL = 267.32 LBS TO BE BRACED
   USE LOOS & CO. #18B00 @45 (MIN) INTO CONCRETE W/ BOLT (MAX LOAD = 778 LBS)
   LONGITUDNAL BRACE – 3.18 LBS PER FT. x 80'–0" = 254.4 LBS TO BE BRACED
   USE LOOS & CO. #18B00 @45 (MIN) INTO CONCRETE W/ BOLT (MAX LOAD = 778 LBS)
4) 2½" MAIN:
   LATERAL BRACE – 2.95 LBS PER FT. x 40'–0" = 118.0 LBS TO BE BRACED
   1½" LINE PIPING – 1.81 LBS PER FT. x 169'–0" = 305.89 LBS TO BE BRACED
   1¼" LINE PIPING – 1.47 LBS PER FT. x 162'–8" = 239.12 LBS TO BE BRACED
   1" LINE PIPING – 1.03 LBS PER FT. x 81'–4" = 83.77 LBS TO BE BRACED
   TOTAL = 746.78 LBS TO BE BRACED
   USE LOOS & CO. #18B00 @45 (MIN) INTO CONCRETE W/ BOLT (MAX LOAD = 778 LBS)
   LONGITUDNAL BRACE – 2.95 LBS PER FT. x 80'–0" = 236.0 LBS TO BE BRACED
   USE LOOS & CO. #18B00 @30 (MIN) INTO CONCRETE W/ BOLT (MAX LOAD = 550 LBS)

3) Where needed, use 1" s/40 pipe with Afcon seismic attachments #77. #1 and #410 for hard pipe bracing.

NOTE:
SEISMIC DESIGN CALCULATIONS ARE IN COMPLIANCE WITH NFPA-13, 2010 AND IBC, 2009, REQUIREMENTS.

GENERAL NOTES

- A MINIMUM CLEARANCE OF 18" MUST BE MAINTAINED BETWEEN THE TOP OF ANY STORAGE AND THE SPRINKLER DEFLECTORS.
- STORAGE OVER 12 FEET HIGH IS NOT ALLOWED FOR IN THIS DESIGN.
- UNDERGROUND PIPING, TO BE PROVIDED AND INSTALLED BY OTHERS, IS TO BE IN ACCORDANCE WITH NFPA-24 REQUIREMENTS. A COMPLETED AND SIGNED TEST CERTIFICATE MUST BE PROVIDED TO HAMPSHIRE FIRE PROTECTION PRIOR TO CONNECTION TO THE SPRINKLER SYSTEM.
- PITCHING OF PIPE, WHERE REQUIRED, TO BE IN ACCORDANCE WITH NFPA-13.
- ALL SPRINKLER WORK TO MEET NFPA-13 REQUIREMENTS.
- ALL EQUIPMENT TO BE OF LISTED/APPROVED TYPES AND INSTALLED IN ACCORDANCE WITH ITS LISTING.
- A BACKFLOW DEVICE, DC TYPE, TO BE INSTALLED PER MANUFACTURES REQUIREMENTS.
- WORK TO START AT AN 8" 125# STANDARD FLANGE (BY OTHERS) AS SHOWN..

PIPING MATERIALS

- MAIN PIPING:
  - SCHEDULE 10 BLACK STEEL (1½" AND UP) FOR WET & DRY SYSTEMS.
  - MAIN FITTINGS TO BE GROOVED, FLANGED, WELDED AND/OR MECH. W/ GROOVED CPLGS.
- LINE PIPING:
  - SCHEDULE 40 BLACK STEEL (1" THRU 2") FOR WET & DRY SYSTEMS.
  - LINE FITTINGS TO BE CLASS 125 BLACK CAST IRON AND/OR MALLEABLE IRON BLACK, AND/OR WELDED W/ GROOVED CPLGS.

FIRE FLOW DATA

A HYDRANT FLOW TEST CONDUCTED BY THE PORTLAND WATER DEPT. YIELDED THE FOLLOWING:
TEST DATE: 10-25-14
TEST TIME: 10:00 AM
STATIC PRESSURE = 62 PSI
RESIDUAL PRESSURE = 60 PSI
FLOW = 992 GPM
ELEVATION OF DATA = +9' TO GARAGE FF

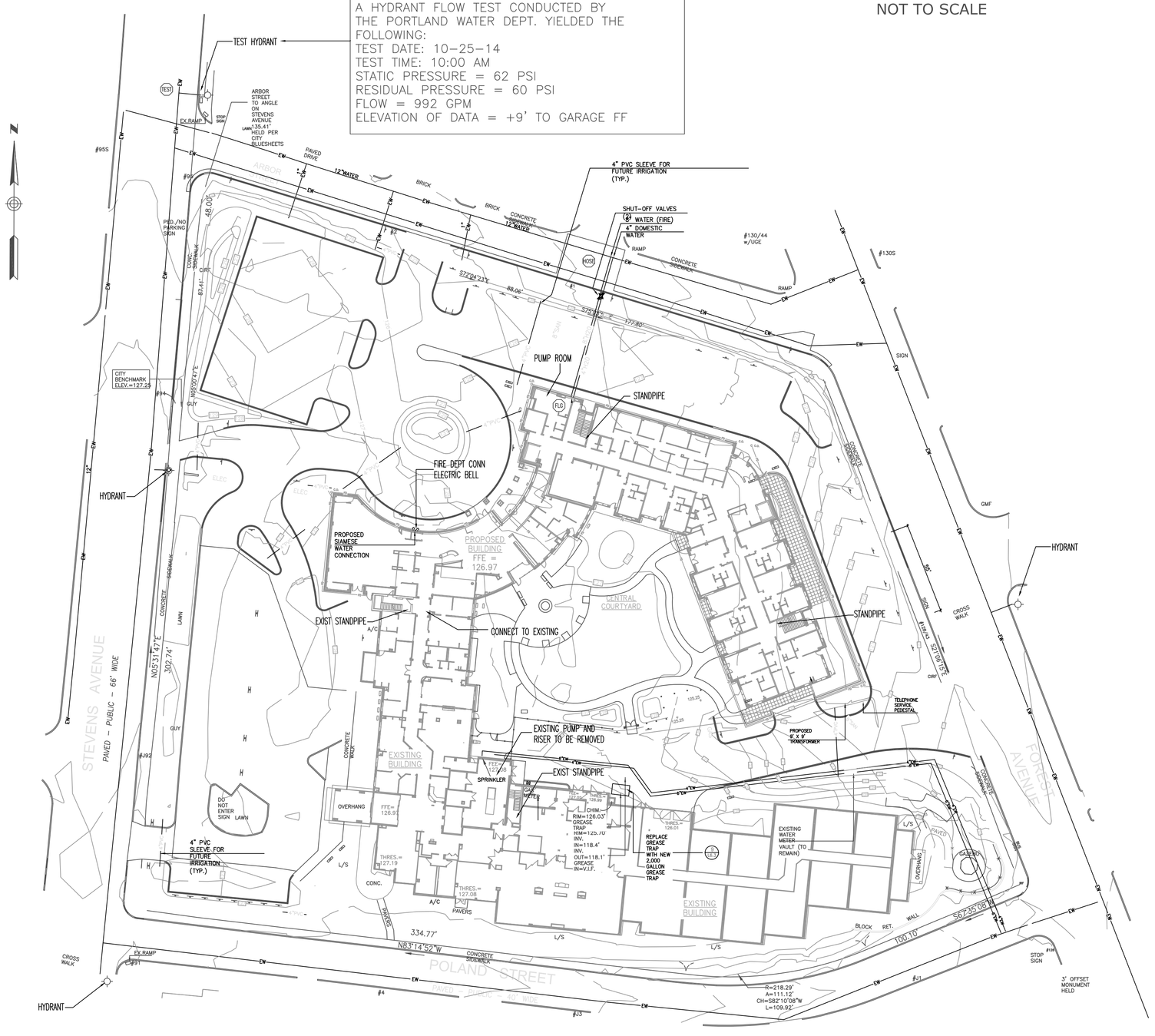

SITE PLAN

NOTE:

IT IS UNDERSTOOD THAT ALL AREAS OF THE BUILDING(S) ARE TO BE HEATED SPACES (40 DEG. F. MIN) AND ARE SUITABLE FOR THE INSTALLATION OF WATER FILLED PIPING SYSTEMS.

HAMPSHIRE FIRE PROTECTION ACCEPTS NO RESPONSIBILITY/LIABILITY FOR DAMAGES DUE TO FREEZING AT THIS TIME, NOR IN THE FUTURE, TO PIPING SYSTEMS, THE PROPERTY AND/OR ITS CONTENTS.

NOTE:
HAMPSHIRE FIRE PROTECTION ACCEPTS NO RESPONSIBILITY FOR DAMAGES DUE TO TAMPERING AND/OR VANDILISM OF CLOSET SPRINKLER HEADS AND/OR PIPING. THIS INCLUDES DAMAGE CAUSED BY ITEMS BEING HUNG FROM SPRINKLER COMPONENTS.

DESIGN CRITERIA

THE FOLLOW CRITERIA ARE USED AS A BASIS FOR DESIGN:

– SPRINKLERS:
SPRINKLER SYSTEM DESIGN CRITERIA ARE IN ACCORDANCE WITH NFPA-13 REQUIREMENTS AS OUTLINED BELOW:
LIGHT HAZARD = .10 GPM/SQ. FT. OVER 1500 SQ. FT., 100 GPM HOSE ALLOWANCE
ORDINARY HAZARD GP. 1 = .15 GPM/SQ. FT. OVER 1500 SQ. FT., 250 GPM HOSE ALLOWANCE
ORDINARY HAZARD GP. 2 = .20 GPM/SQ. FT. OVER 1500 SQ. FT., 250 GPM HOSE ALLOWANCE

REMOTE AREA REDUCTIONS FOR QR HEADS APPLIED.

DRAWING LIST

SHEET 1 – COVER SHEET, NOTES, SITE PLAN, DETAILS
SHEET 2 – GARAGE LEVEL
SHEET 3 – GROUND LEVEL "A"
SHEET 4 – GROUND LEVEL "B"
SHEET 5 – GROUND LEVEL "C"
SHEET 6 – LEVEL 2
SHEET 7 – LEVEL 3
SHEET 8 – LEVEL 4
SHEET 9 – LEVEL 5
SHEET 10 – STANDPIPES
SHEET 11 – FIRE PUMP

PLANS PREPARED BY:
BRIAN BENOIT
NICET LEVEL 3 CERT. #075934

THESE PLANS ARE SUBJECT TO MINOR DEVIATIONS, DUE TO COORDINATION AND/OR FIELD CONDITIONS, NOT AFFECTING SCOPE OF WORK OR CODE COMPLIANCE.

2 1 0 4 8
SCALE 1/8"=1'-0"

2 1 0 4 8
SCALE 1/8"=1'-0"
N

Hampshire
FIRE PROTECTION
8 NORTH WENTWORTH AVENUE LONDONDERRY, NH 03053
PH:(603) 432-8221 FAX: (603) 434-3194
WEBSITE: HAMPSHIREFIRE.COM
MASS LIC# 003941 MAINE LIC# 238
VERMONT CERTIFIED

WATER SUPPLY DATA

Static pressure	60	psi
Residual pressure	60	psi
Flow	992	gpm
Location	See Site Plan	
Elevation	+9	
Date	10-25-14	Time 10 AM
Information by	Portland Water Dept.	

SPRINKLERS

Total This Sheet 0	Total This Job 979
Symbol	Description

Drawing Title	Sheet 1, General Notes / Details / Site Plan
Contract No.	4737CNH
Drawn By	Benoit
Scale	1/8" = 1'-0"
Date	2-12-16
Approval By	Portland Fire Dept, ME SFMO

Revisions:	Date:
1	
2	
3	
4	
5	
6	
7	

Project:
The Park Danforth Expansion & Renovation
777 Stevens Ave.
Portland, ME 04103

Contract with:
PC Construction
789 Stevens Ave.
Portland, ME 04103

FIRE PROTECTION ENGINEER STAMP