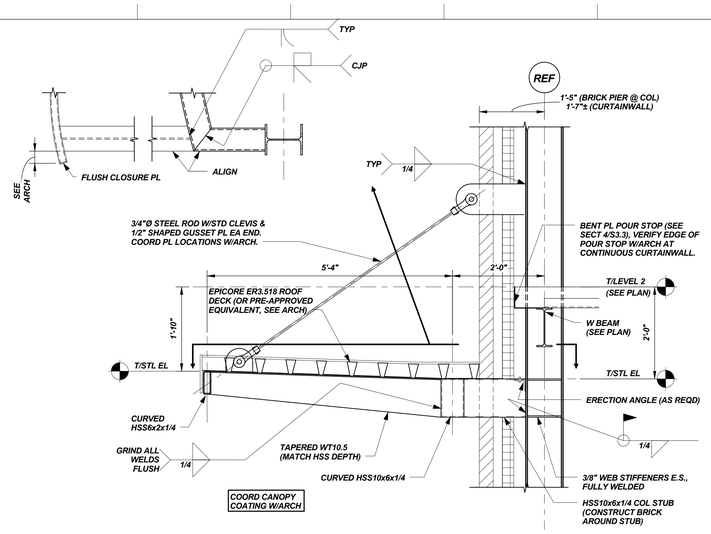

SECTION 1 / S1.2C
3/4" = 1'-0"

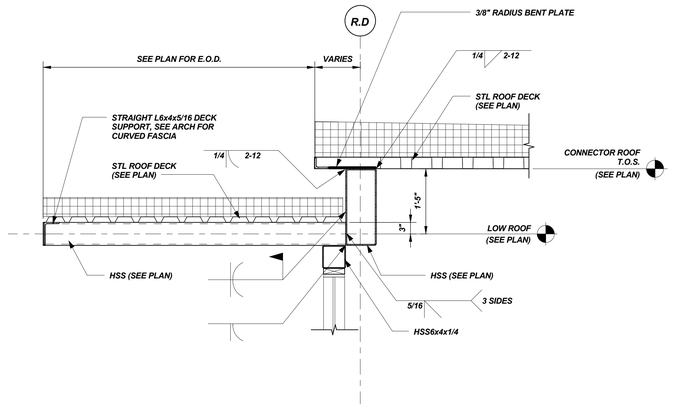

SECTION 2 / S1.2B
3/4" = 1'-0"

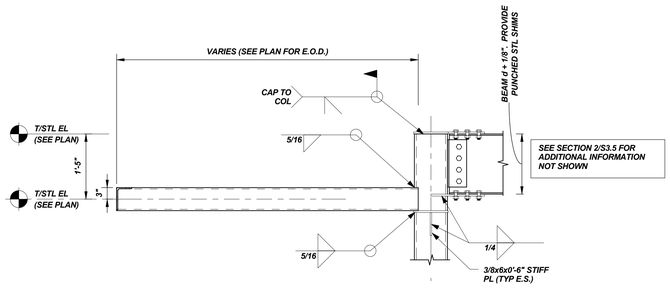

SECTION AT COLUMN

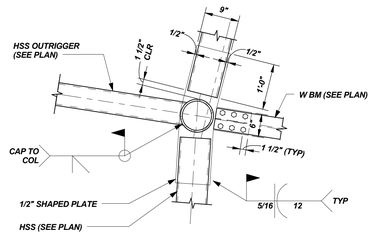

TOP CONNECTION

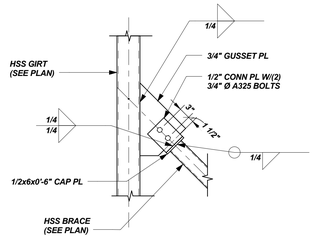

DETAIL A / S1.2B
3/4" = 1'-0"

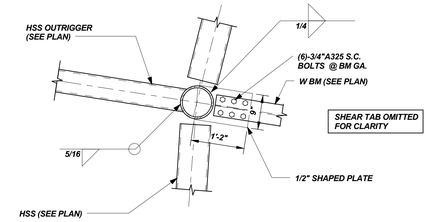

MIDDLE CONNECTION

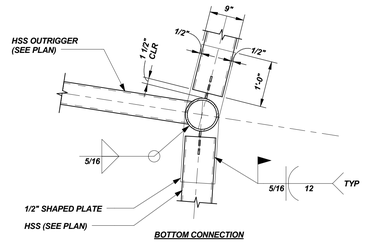

BOTTOM CONNECTION

SECTION 3 / S1.2B
3/4" = 1'-0"

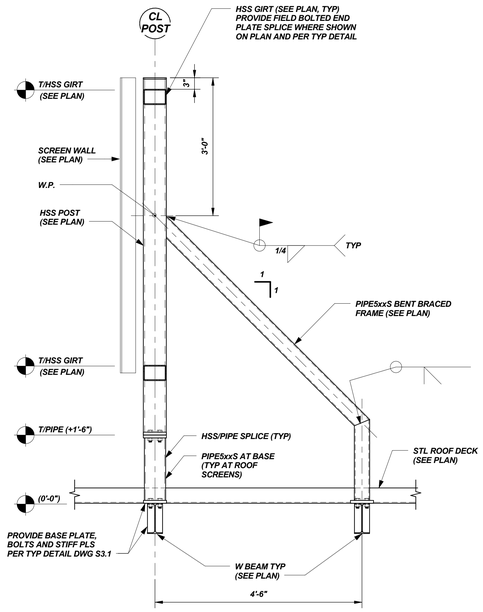

SECTION 4 / S1.6C
3/4" = 1'-0"

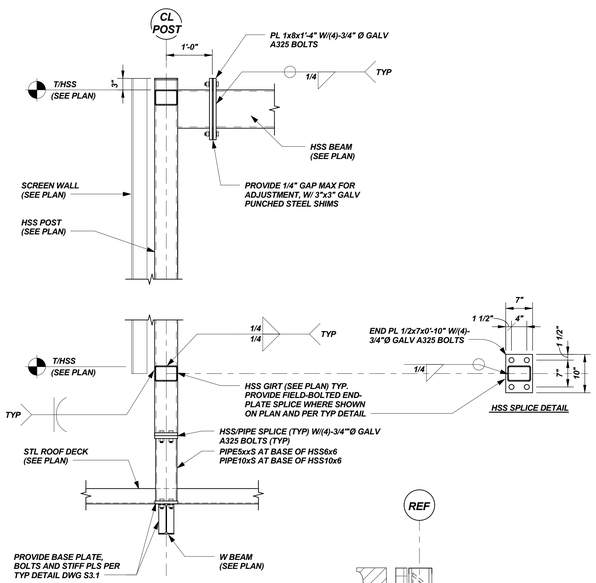

SECTION 5 / S1.2B
3/4" = 1'-0"

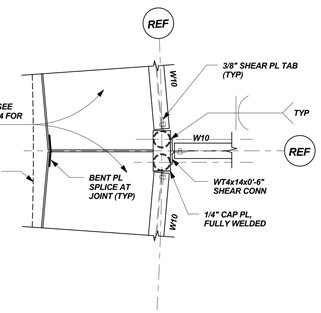

DETAIL B / S1.2B
3/4" = 1'-0"

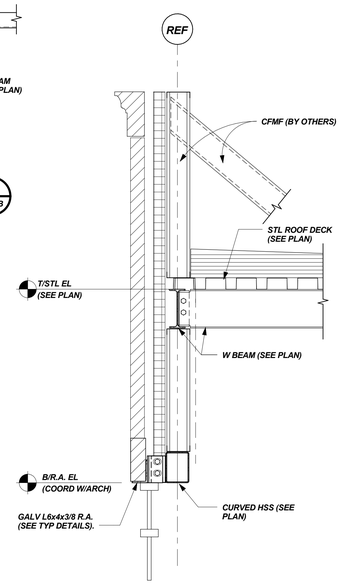

SECTION 6 / S1.2B
3/4" = 1'-0"

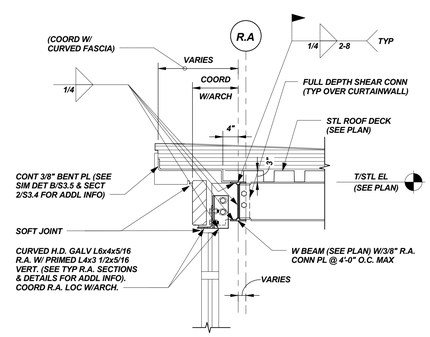

SECTION 7 / S1.2B
3/4" = 1'-0"

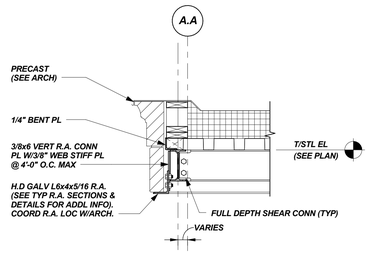

SECTION 8 / S1.2B
3/4" = 1'-0"

LAVALLEE | BRENSINGER ARCHITECTS
155 Dow Street, Suite 400, Manchester, NH 03101
40 Cambridge Street, Charlestown, MA 02129
NH: 603.622.5450 MA: 617.398.2035 www.LBPA.com

BECKER STRUCTURAL ENGINEERS
75 York Street, Portland, Maine 04101
207.879.1838 ■ beckerstructural.com

STATE OF MAINE DANIEL P. BURRI No. 10910 LICENSED PROFESSIONAL ENGINEER

Owner

The Park Danforth

77 Stevens Ave, Portland, ME 04103

NO.	DESCRIPTION	DATE
2	ADDENDUM #2	06-25-15

N

CONTENT:
FRAMING SECTIONS & DETAILS

DRAWN BY:	Author
PROJECT NO:	3422
DATE:	05/27/15
REVISED:	10/16/15
SCALE:	As indicated

S3.5

Project Phase
CONFORMANCE SET

COPYRIGHT © 2014 BY LAVALLEE/BRENSINGER PROFESSIONAL ASSOCIATION. ALL RIGHTS RESERVED. NO REPRODUCTION WITHOUT PERMISSION.

10/16/2015 1:38:11 PM C:\Users\alex\Documents\3422-THE PARK DANFORTH-R15-STRUCT-CONFORM-SET 10-16-15v1_jaiheldeck.rvt