Starbuck's – D/T Exit Directional Details

46" ILLUMINATED DIRECTIONAL RTO

Qty. 1 SBC-S14104-DT-RH/RTO

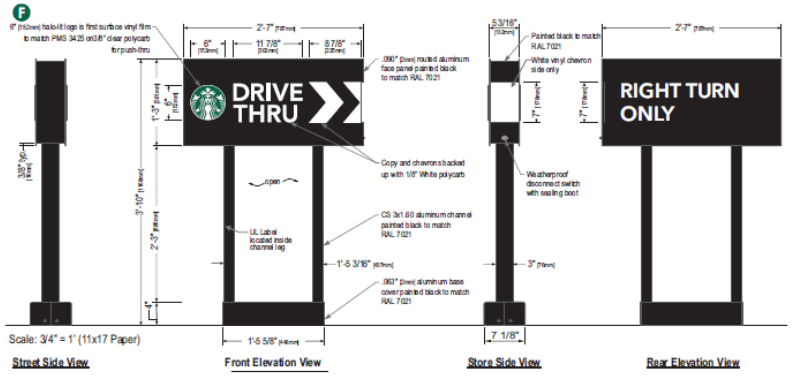

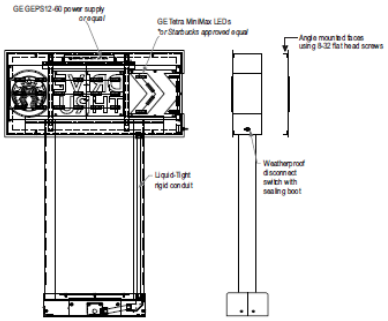

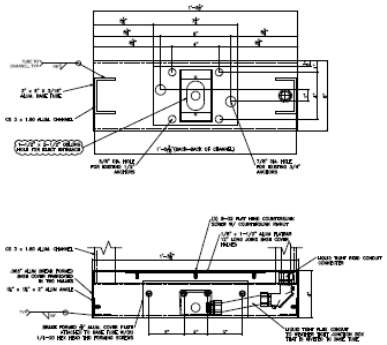

COLOR LEGEND		
	PMS/PAINT	VINYL
	PMS 3425 C	3M 3630-76
	RAL 7021M	3M 3630-22
	PMS WHITE	3M 3630-20/ 7725-10
	PMS 369 C	NA
	REFL. WHITE	3M 680-10

Sign Specifications:

Cabinet:

- Fabricated .090" [2mm] aluminum housing painted black to match RAL 7021 with white end cap as shown.
- Directional copy and chevrons backed up with 1/8" White polycarb. Siren logo is 6" [152mm] diameter, 3/8" clear polycarb routed to push thru aluminum face. Decorate logo with 1st surface computer cut vinyl film to match PMS 3425. Edges of push thru logo are to be polished. All acrylic face elements to be attached to aluminum face panel with weld studs.
- Interior aluminum surfaces of sign cabinet to be painted white with Lacryl Starbrite.
- Internal structure of cabinet shall be per approved shop drawings.
- Graphic elements are internally illuminated using GE Tetra MiniMax LED system *or Starbucks approved equal*. LED's to be mounted on an internal baffle with self-contained power supply. All electrical components are removable for service.

Support:

- Supporting structure will be all welded aluminum tube and channel construction painted black to match RAL 7021 as per approved shop drawings and shall be integral to the sign cabinet.
- Base tube will be constructed so that it can be retro-fittable to existing sign foundations. All foundations, existing and new must be analyzed for suitability and must meet all local city or state codes regulations.

Size	Sq. Ft.[1]	Sq. Ft.[2]	Volts	Amps
46" (1168mm)	3.23	9.90	120	0.85

HILTONDISPLAYS
125 HILLSIDE DRIVE • GREENVILLE SC 29607
P 800 353 9132 • F 864 242 2204
www.hiltondisplays.com

QID 17-38411

JOB NAME	Starbucks 11917
LOCATION	1080 Forest Ave. Portland, ME 04103
CUSTOMER CONTACT	
SALESMAN / PM	Joe Nolasco
DESIGNER	Jesse Black
DWG. DATE	08-24-17
REV. DATE / REVISION	
SCALE	As Noted
FILE	2017/Starbucks/Portland ME/ 17-38411/SB Portland ME.cdr

DESIGN SPECIFICATIONS ACCEPTED BY:

IST: CLIENT:

SLS/PM: LANDLORD:

THE INTENT OF THIS DRAWING IS TO SHOW A CONCEPTUAL REPRESENTATION OF THE PROPOSED SIGNAGE. DUE TO VARIATIONS IN PRINTING DEVICES AND SUBSTRATES, THE FINISHED PRODUCT MAY DIFFER SLIGHTLY FROM DRAWING.

Underwriters Laboratories Inc. DRY DAMP WET

THIS DESIGN IS THE ORIGINAL AND UNPUBLISHED WORK OF HILTON DISPLAYS AND MAY NOT BE REPRODUCED, COPIED, OR EXHIBITED IN ANY FASHION WITHOUT WRITTEN CONSENT FROM AN ALTHORIZED OFFICER OF THE COMPANY. © HILTON DISPLAYS 2017

BURR SIGNS

Client & Location: Starbucks 1080 Forest Ave Portland ME

Customer Approval Signature | Revisions | Drawing ID | Date 9.15.17 | Page # | Drawn By | Sales Rep | WO #