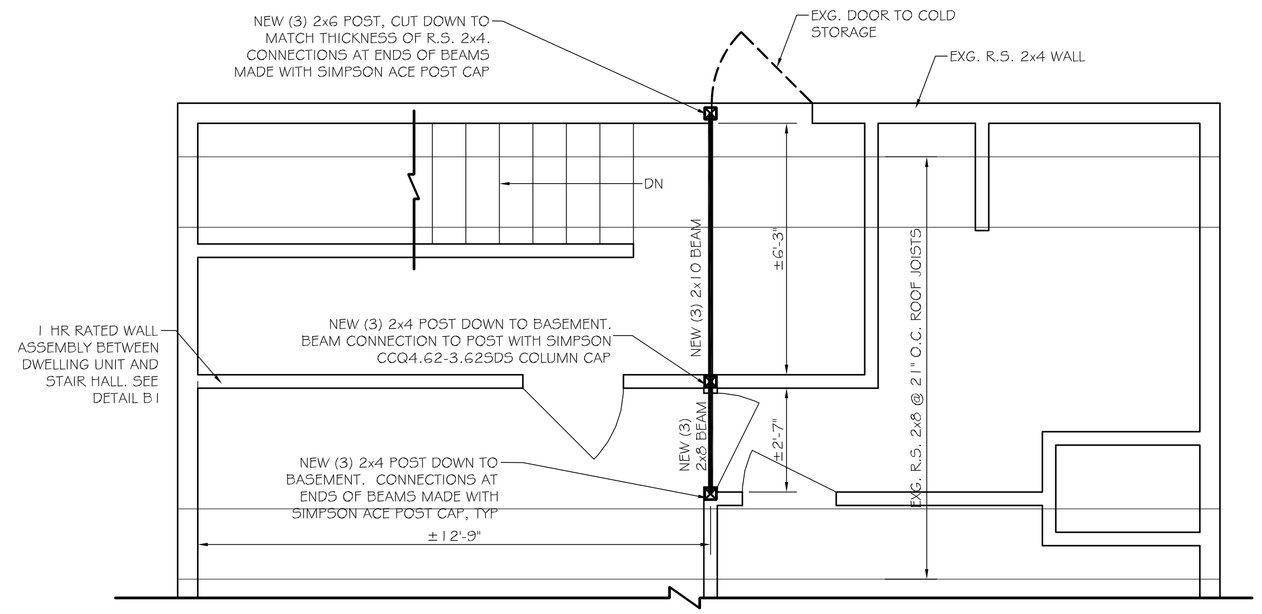

C2 THIRD FLOOR PLAN

SCALE: 3/8"= 1'-0"

WOOD FRAMING NOTES

1. STRUCTURAL LUMBER: No. 2 SPRUCE-PINE-FIR OR BETTER LAMINATED VENEER LUMBER (LVL) BY BOISE:
   BEAMS: 3100Fb VERSA-LAM
   COLUMNS: 2650 Fb VERSA-LAM
2. DESIGN CODES:
   A. NATIONAL DESIGN SPECIFICATIONS FOR WOOD CONSTRUCTION BY THE NATIONAL FOREST PRODUCTS ASSOCIATION.
3. FASTENERS: COMPLY WITH RECOMMENDED FASTENING SCHEDULE TABLE R602.3 (1) OF THE IRC 2009 BUILDING CODE, UNLESS SHOWN OTHERWISE ON THE DRAWINGS.
4. CONTRACTOR VERIFY ALL DIMENSIONS PRIOR TO CONSTRUCTION

8. ALL BOLTED WOOD CONNECTIONS TO BE MADE WITH G90 HOT DIP GALVANIZED HEX HEAD THROUGH BOLTS. SIZE AS INDIATED ON THE DRAWINGS. DOME HEADED CARRIAGE BOLTS ARE NOT PERMITTED.
9. ALL NAILS TO SIMPSON PRODUCTS AND PT LUMBER TO BE G90 HOT DIP GALVANIZED 0.162Ø COMMON BOX NAILS, OR AS RECOMMENDED BY SIMPSON.
10. ALL SIMPSON PRODUCTS IN CONTACT WITH PT LUMBER TO BE "ZMAX" (G185 GALVANIZED) COATED.
11. TRIPLE LVLS TO BE CONNECTED WITH (2) ROWS 1/2Ø A36 THROUGH BOLTS 12" O.C. STAGGERED.
12. DOUBLE LVLS TO BE CONNECTED WITH (3) ROWS 16D SINKERS AT 12" O.C.
13. ALL BUILT-UP OR SOLID WOOD BEAMS TO BE CONNECTED TO WOOD POSTS WITH SIMPSON AC/ACE CAPS, TYPICAL UNO ON PLAN.
14. ALL WOOD IN CONTACT WITH CONCRETE TO BE PRESSURE TREATED.
15. ALL FASTENERS IN PT LUMBER TO BE HOT DIPPED G90 GALVANIZED.
16. GENERAL CONTRACTOR TO COMPLY WITH IBC 2009 TABLE 2304.9.1 FASTENING SCHEDULE.
17. ALL SOLID WOOD JOISTS TO HAVE 2X BLOCKING AT MID-SPAN AND SUPPORT LOCATIONS.
18. ALL STRUCTURAL DIMENSIONAL LUMBER TO BE SPF #1/#2 OR BETTER.

STRUCTURAL DISCLAIMER:
THIS P.E. REVIEW COVERES STRUCTURAL FRAMING MEMBERS SIZES FOR NEW FRAMING ELEMENTS (BEAMS, COLUMNS) DEPICTED ON THIS PLAN ONLY. UNLESS OTHERWISE NOTED, DESIGN AND DETAIL FOR FOUNDATION WALL ELEMENTS, FRAMING CONNECTIONS, COMPONENTS AND CLADDING, FINISHES, FLOOR PLAN LAYOUT, AND LIFE SAFETY CODE REQUIREMENTS HAVE NOT BEEN REVIEWED AND ARE BEYOND THE PURVIEW OF THIS P.E. SEAL. USE OF THESE DRAWINGS INDICATES OWNER/CONTRACTOR AGREEMENT TO THESE TERMS.

C1 NOTES

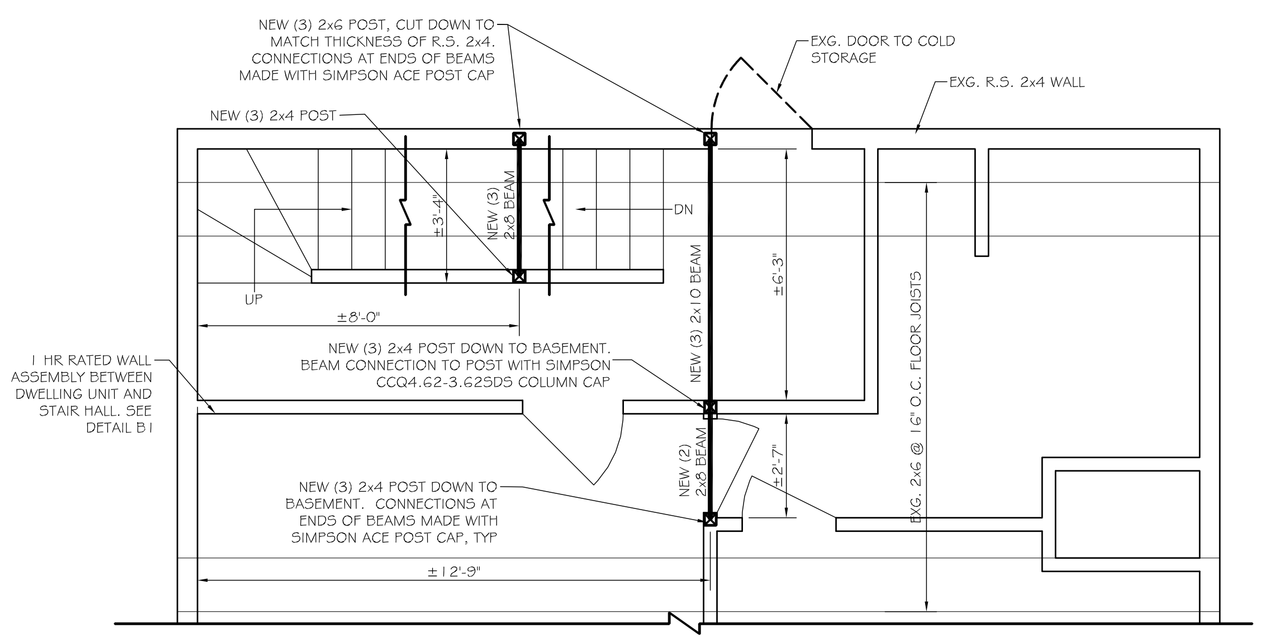

B2 SECOND FLOOR PLAN

SCALE: 3/8"= 1'-0"

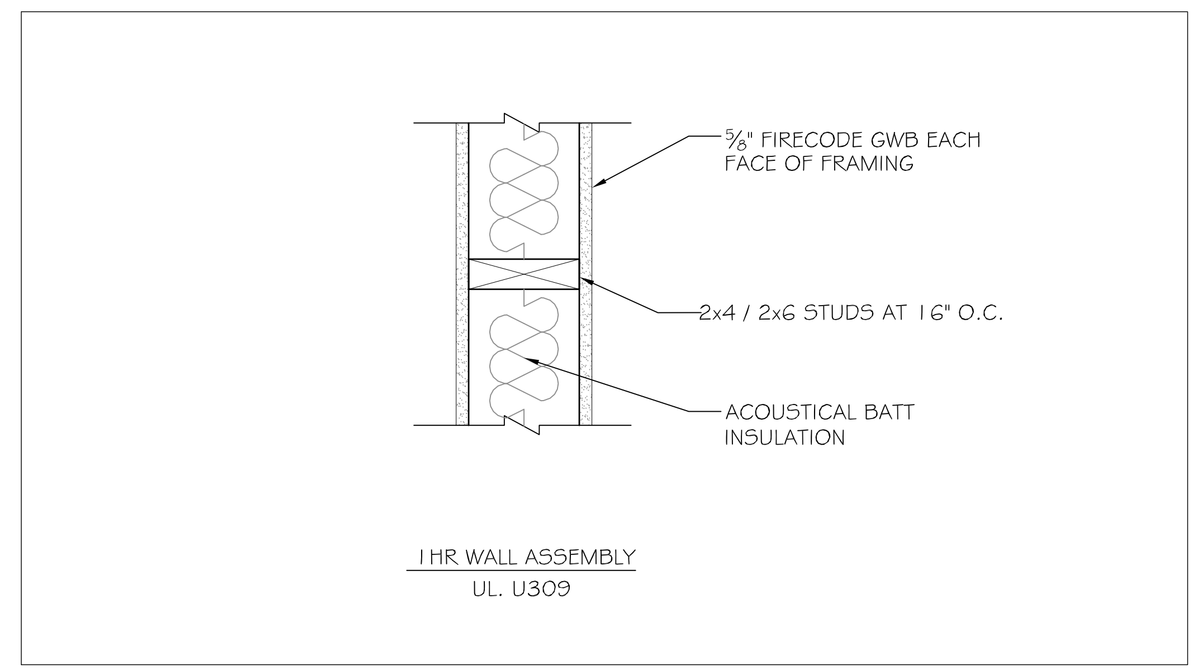

B1 1 HR RATED WALL ASSEMBLY - BETWEEN DWELLING UNITS AND REAR STAIR/HALL

NTS

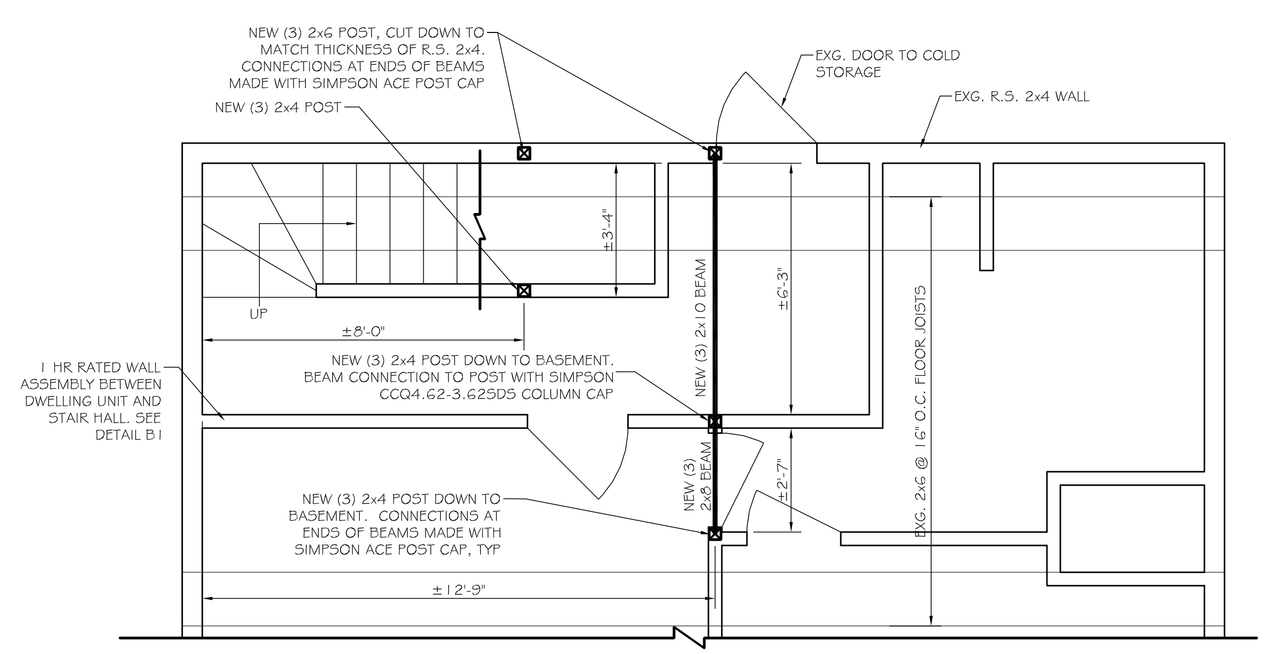

NOTE:
1. CONNECTIONS WITH SIMPSON PRODUCTS TO BE MADE IN ACCORDANCE WITH SIMPSON SPECIFICATIONS.
2. IF REQ., BUILD UP BEAMS TO ACCOMMODATE SIMPSON POST CONNECTIONS.

A2 FIRST FLOOR PLAN

SCALE: 3/8"= 1'-0"

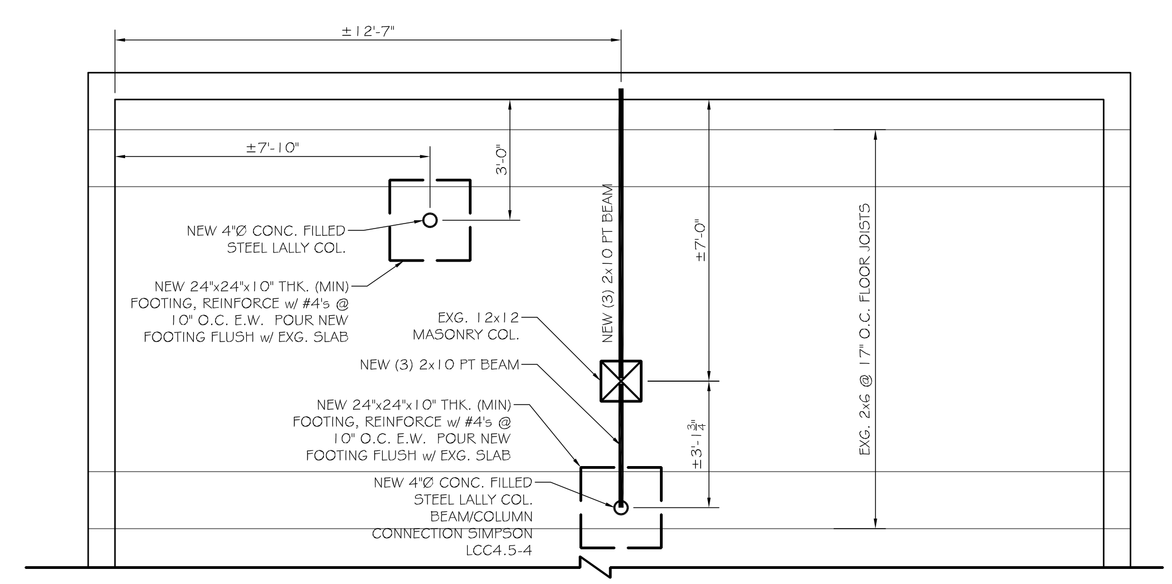

A1 BASEMENT PLAN

SCALE: 3/8"= 1'-0"

STATE OF MAINE
WARREN H GEROW IV
No. 13431
PROFESSIONAL ENGINEER

ASSOCIATED DESIGN PARTNERS INC.
80 Leighton Road
Falmouth, Maine 04105
Office: (207) 878-1751
Fax: (207) 878-1788
E-Mail: adp@adpengineering.com

THIS DRAWING, DESIGN AND ELECTRONIC FILE ARE THE PROPERTY OF ASSOCIATED DESIGN PARTNERS, INC. THE REPRODUCTION, COPYING OR ANY OTHER USE OF THIS DOCUMENT WITHOUT WRITTEN CONSENT IS PROHIBITED.

PROJECT: **1066 FOREST AVE.**
PORTLAND, ME.
FOR: DUBE PLUS CONSTRUCTION

SHEET TITLE: **PARTIAL FLOOR FRAMING PLANS ISSUED FOR PERMITTING**

REVISIONS

No.	BY	DESCRIPTION	DATE
1	WHG	DOOR MODIFICATION	7/24/17
2	WHG	BEAM CONNECTIONS & 1 HR. FIRE ASSEMBLY	8/15/17
3			
4			
5			
6			
7			
8			

DATE : 5-25-17
SCALE : AS NOTED
DESIGN BY: WHG
DRAWN BY: RSC
FILE #: 17168-A1.dwg
PROJECT NUMBER: 17168
SHEET NO: A101

Date: 09/01/17