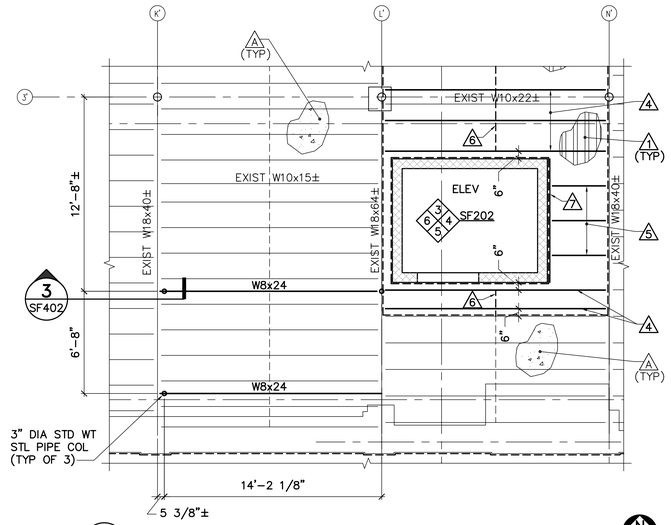

1 ENLARGED PARTIAL SECOND FLOOR FRAMING PLAN

SF102 SF402 SCALE: 1/4"=1'-0"

PLAN NORTH

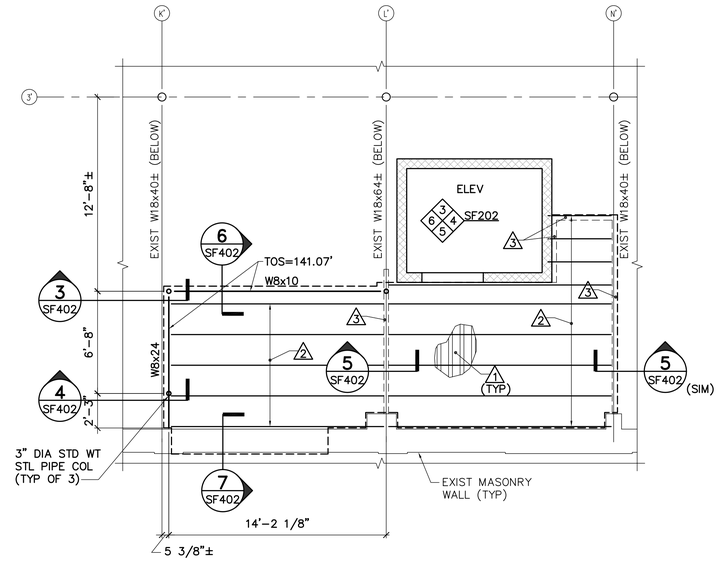

2 ENLARGED PARTIAL SECOND FLOOR INFILL PLAN

SF102 SF402 SCALE: 1/4"=1'-0"

PLAN NORTH

EXISTING KEYNOTES: (THIS SHEET ONLY)

A. EXISTING 2-1/2"± DRAPED STEEL MESH/CONCRETE FLOOR SLAB.

B. EXISTING 10"± STEEL JOISTS AT 20"± ON-CENTER.

C. EXISTING STEEL X-BRIDGING.

D. EXISTING STEEL PIPE COLUMN.

KEYNOTES: (THIS SHEET ONLY)

1. 2" LIGHT WEIGHT CONRCRETE SLAB WITH 9/16"x24GA STEEL FORM DECK AND 6x6, W1.4xW1.4 WELDED WIRE FABRIC.
2. 800 S 200-97 COLD-FORMED STEEL JOISTS AT 2'-0" ON-CENTER.
3. 600 S 162-68 COLD-FORMED STEEL STUDS AT 2'-0" ON-CENTER.
4. 10K1 STEEL JOISTS AT 2'-0" ON-CENTER, UNLESS NOTED OTHERWISE.
5. 2.5 K1 STEEL JOIST SUBSTITUE.
6. BRIDGING INSTALLED PER THE MANUFACTURER'S PRINTED INSTRUCTIONS.
7. ∡6x4x5/16 (LLV). SEE DETAIL 13/SF502.

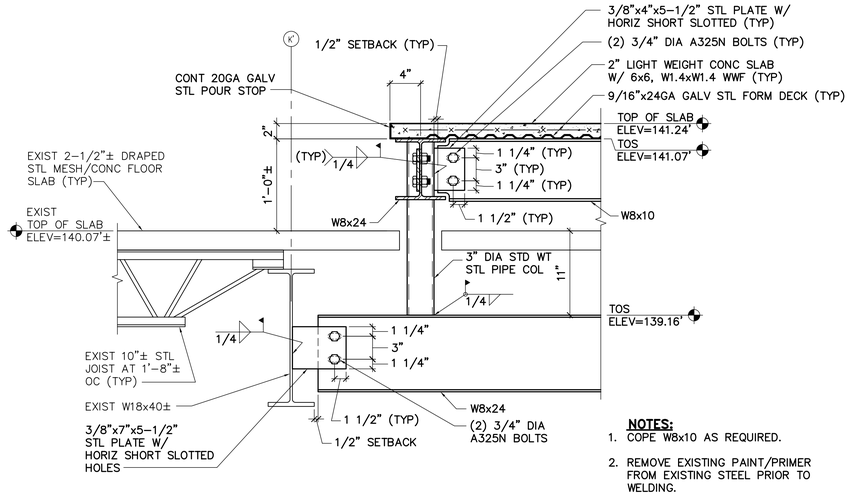

NOTES:

1. COPE W8x10 AS REQUIRED.
2. REMOVE EXISTING PAINT/PRIMER FROM EXISTING STEEL PRIOR TO WELDING.

3 W8x10/W8x24 CONN DETAIL

SF101, SF102, SF103, SF402, SF501 SF402 SCALE: 1-1/2"=1'-0"

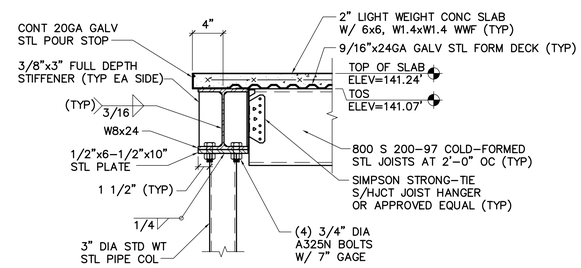

4 W8x24 CONN DETAIL

SF402 SF402 SCALE: 1-1/2"=1'-0"

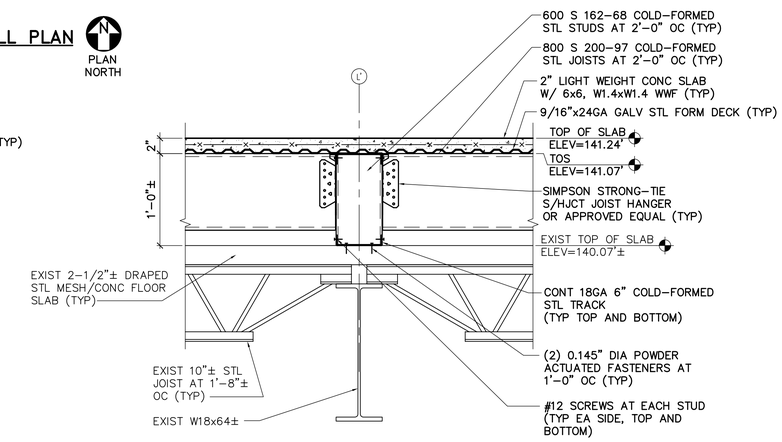

5 TYP 800 S 200-97 COLD-FORMED STL JOIST SUPPORT DETAIL

SF402 SF402 SCALE: 1-1/2"=1'-0"

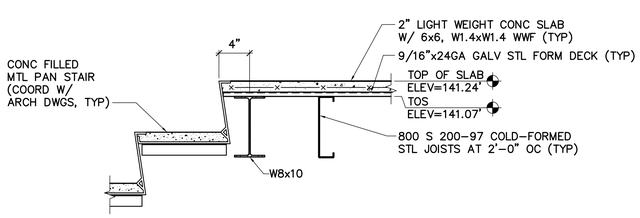

6 DECK EDGE DETAIL AT STAIR S03

SF402 SF402 SCALE: 1-1/2"=1'-0"

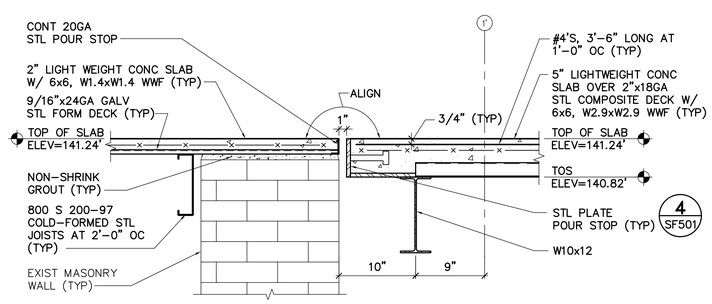

7 TYP ELEVATED SLAB TRANSITION DETAIL

SF102, SF402 SF402 SCALE: 1-1/2"=1'-0"

GRAPHIC SCALES

1-1/2"=1'-0" 1' 8" 4" 0 1'

1/4"=1'-0" 4' 2' 0 4' 8'

CHECK GRAPHIC SCALES BEFORE USING

24 May, 2016 - 2:08pm
C:\dfile\21502.10-SF402.dwg

OAK POINT ASSOCIATES
ARCHITECTURE • ENGINEERING • PLANNING
231 Main Street, Biddeford, Maine 04005 (T) 207.283.0199 (F) 207.283.2335
www.oakpoint.com

DESIGNED BY: JEG
DRAWN BY: MJC
CHECKED BY: DNM

PROJECT: 21502.10

UNIVERSITY OF NEW ENGLAND
PORTLAND CAMPUS
STEVEN AVENUE ARMORY
716 STEVENS AVE
PORTLAND, MAINE 04103
T (207)283-0171

RENOVATIONS TO THE
STEVENS AVENUE ARMORY

ENLARGED
SECOND FLOOR
PARTIAL
PLANS AND
DETAILS

SCALE: AS NOTED

DATE: 05-24-16

DWG. SF402

SHEET: 36 OF 169