IF THIS SHEET IS NOT 24 X 36 IT IS A REDUCED SCALE PRINT – SCALE ACCORDINGLY

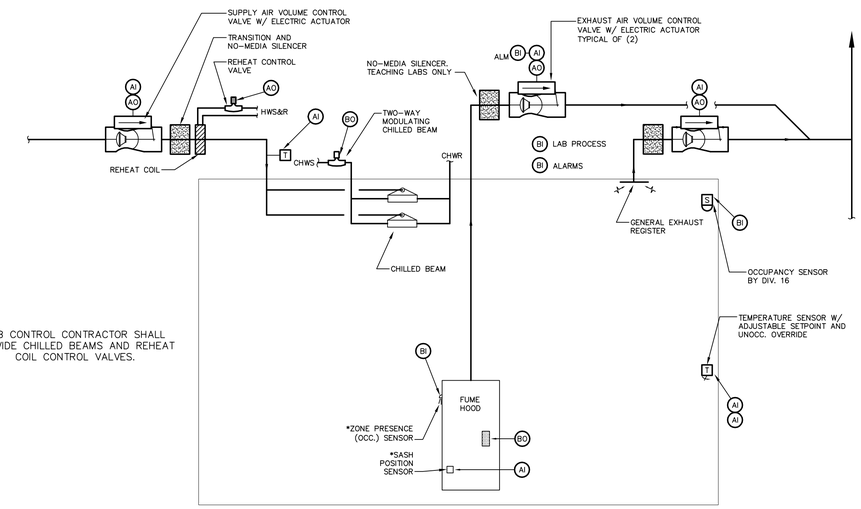

LAB CONTROL CONTRACTOR SHALL PROVIDE CHILLED BEAMS AND REHEAT COIL CONTROL VALVES.

TYPICAL LABORATORY CONTROL DIAGRAM

* ZONE PRESSURE SENSOR AND SASH POSITION SENSOR NOT PROVIDED FOR TEACHING LABS. PROVIDE SASH POSITION SWITCH INSTEAD.

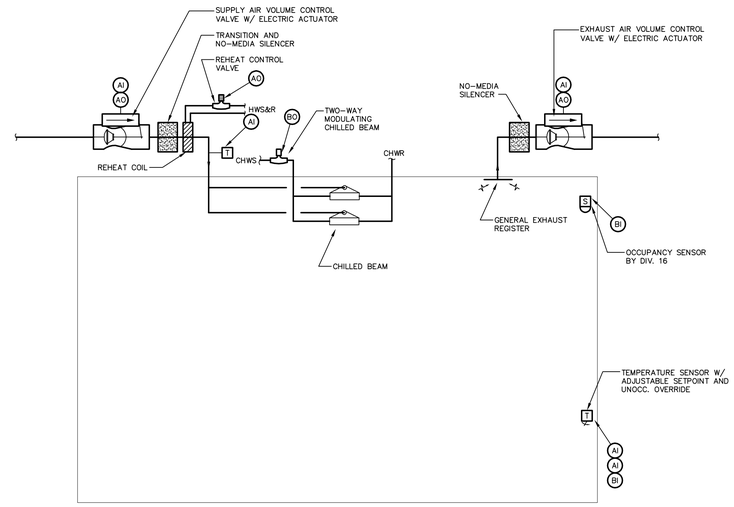

TYPICAL LABORATORY SUPPORT CONTROL DIAGRAM

PERMIT SET - NOT FOR CONSTRUCTION

PORT CITY ARCHITECTURE
65 NEWBURY STREET
PORTLAND, ME 04101
207.761.9000
fax: 207.761.2010
lita@portcityarch.com

STATE OF MAINE DAVID W. MADIGAN III 17580 LICENSED PROFESSIONAL ENGINEER

VANZELM ENGINEERS
VANZELM HEYWOOD & SHADFORD, INC.
10 TALCOTT NOTCH TEL:(860)284-3004 FARMINGTON, CT 06032 FAX:(860)284-3098

PROJECT NO.: 2007120.00

BECKER structural engineers, inc.

SYTDesign CONSULTANTS
CIVIL ENGINEERING & LANDSCAPE ARCHITECTURE

Titan Mechanical, Inc. Design Build Engineering - Mechanical Contracting

#	DATE	DESCRIPTION

PERMIT SET

Date Issued 01/24/08

Project Number 06506

SHEET NAME
MECHANICAL SYSTEMS CONTROL DIAGRAMS

Drawn By AMM

Checked By DWM/FBH

M5.2

COPYRIGHT: Reuse or reproduction of the contents of this document is not permitted without written permission of PORT CITY ARCHITECTURE PA