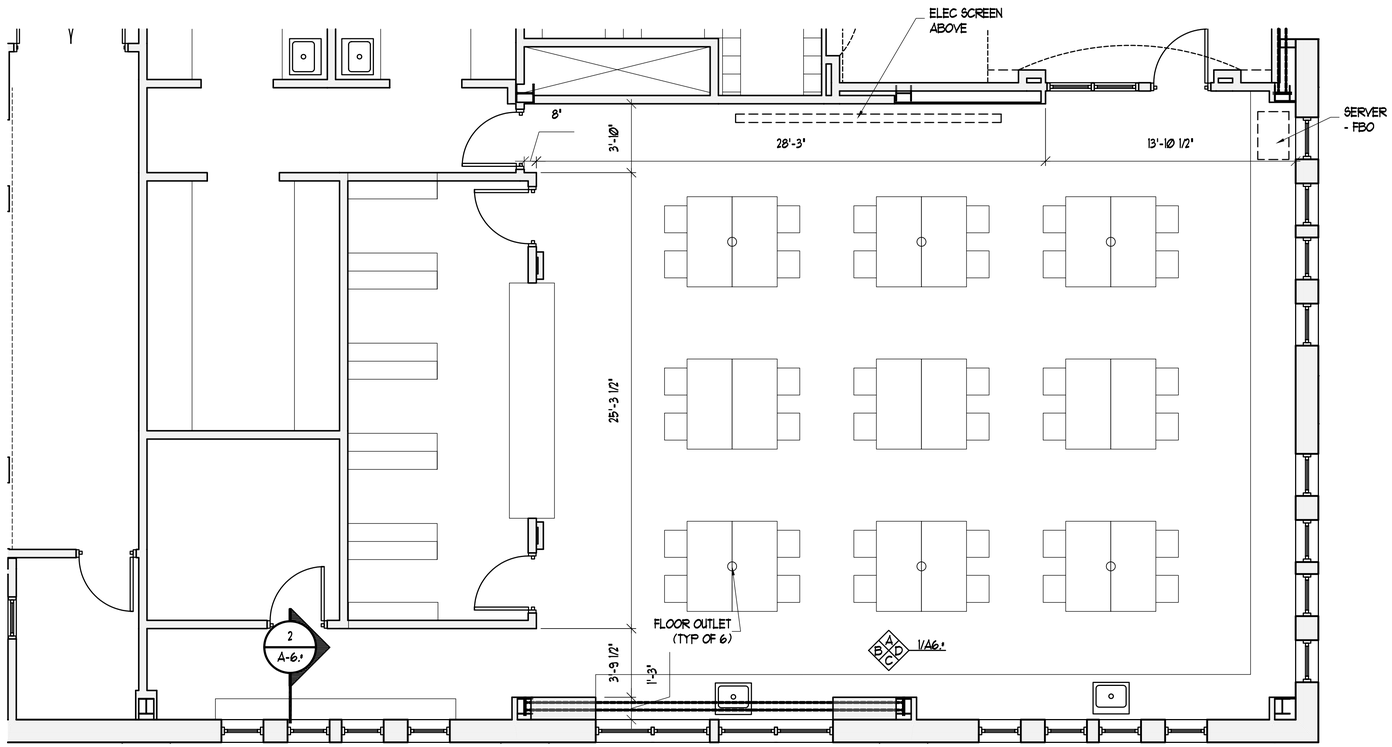

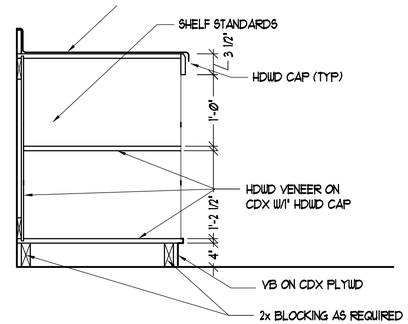

2 A6.* CUBBY DETAIL

0 1' SCALE: 1" = 1'-0"

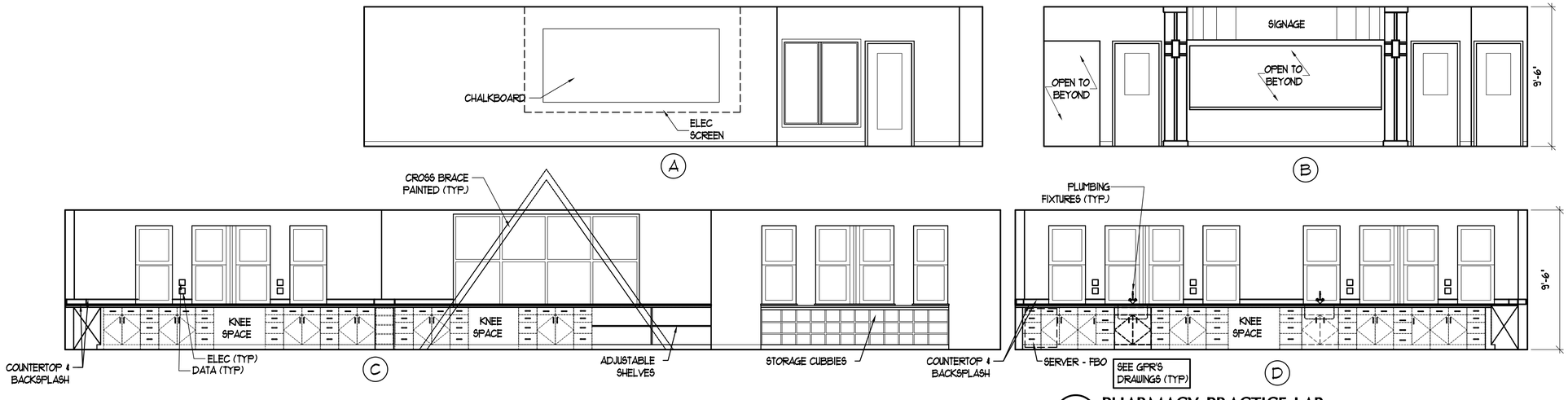

1 A12 A6.* PHARMACY PRACTICE LAB

0 4'-0" SCALE: 1/4" = 1'-0"

IF THIS SHEET IS NOT 24 X 36 IT IS A REDUCED SCALE PRINT - SCALE ACCORDINGLY

PORT CITY ARCHITECTURE

65 NEWBURY STREET
PORTLAND, ME 04101
207.761.9000
fax: 207.761.2010
lita@portcityarch.com

JACOBS CONSULTANCY
GPR Laboratory Planning Practice

VANZELM ENGINEERS
VANZELM HEYWOOD & SHADFORD, INC.

BECKER structural engineers, inc.

SYTDesign CONSULTANTS
CIVIL ENGINEERING & LANDSCAPE ARCHITECTURE

ALLIED/COOK CONSTRUCTION

Favreau ELECTRIC

Titan Mechanical Inc.
Design Build Engineering • Mechanical Contracting

UNIVERSITY OF NEW ENGLAND

COLLEGE OF PHARMACY

716 STEVENS AVENUE, PORTLAND, ME

#	DATE	DESCRIPTION

PERMIT SET

Date Issued 01/24/08

Project Number 06506

GODDARD

SHEET NAME

INTERIOR ELEVS.

Drawn By EAC & ANM

Checked By LAS

A6.*

PERMIT SET - NOT FOR CONSTRUCTION

COPYRIGHT: Reuse or reproduction of the contents of this document is not permitted without written permission of PORT CITY ARCHITECTURE PA