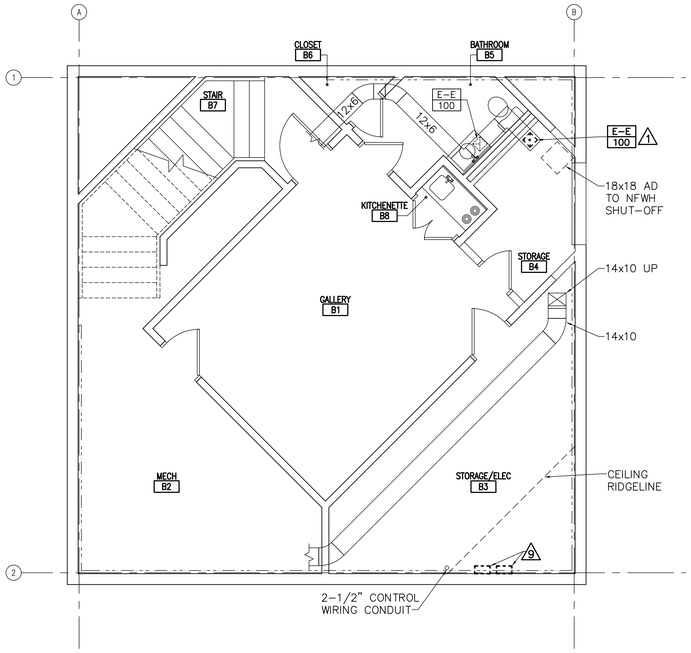

1 MD101 BASEMENT MECHANICAL REMOVALS PLAN
SCALE: 1/4"=1'-0"
PLAN NORTH

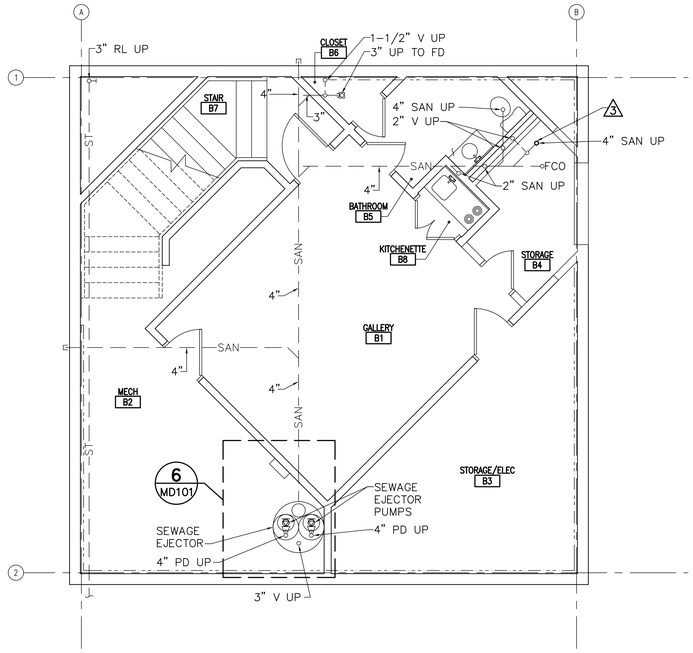

2 MD101 UNDERSLAB PLUMBING REMOVALS PLAN
SCALE: 1/4"=1'-0"
PLAN NORTH

DRAWING NOTE

1. A WATER CLOSET AND LAVATORY, ORIGINALLY LOCATED IN STORAGE B4, HAVE BEEN REMOVED. PRIOR TO CONSTRUCTION, STORAGE SHELVING WITHIN THE ROOM SHIELDED FROM VIEW THE CONDITION OF DOMESTIC WATER AND SANITARY PIPING CONNECTIONS. VERIFY IN FIELD WHETHER THE WATER CLOSET AND LAVATORY DOMESTIC WATER AND SANITARY CONNECTIONS REMAIN EXPOSED AT THE WALL OR AT THE FLOOR. IF SO, PROVIDE THE REMOVAL AND CAPPING FUNCTIONS FOR THE EXPOSED SANITARY AND DOMESTIC WATER PIPING IN STORAGE B4, AS INDICATED IN THE KEYNOTES.

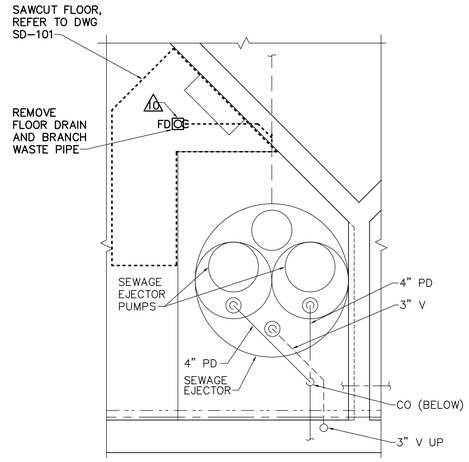

6 MD101 SEWAGE EJECTOR PIPING REMOVAL DETAIL
NOT TO SCALE

DRAWING KEYNOTES

1. REMOVE EXHAUST GRILLE AND DUCT RISER CONNECTION IN PREPARATION FOR REPLACEMENT DUE TO CEILING HEIGHT CHANGE.
2. REMOVE CW PIPE AND ISOLATION VALVE TO NFWH. CAP PIPE OPENINGS TO MAIN AND TO PIPE IN FLOOR SLAB.
3. REMOVE WATER CLOSET SANITARY CONNECTION TO BELOW SLAB LEVEL. REFER TO ARCHITECTURAL DRAWINGS FOR SLAB REMOVAL DETAILS.
4. REMOVE CW, HW AND SANITARY ROUGH-IN PIPING BACK TO WITHIN WALL CAVITY AND CAP WITHIN WALL CAVITY. REFER TO ARCHITECTURAL DRAWINGS FOR WALL REMOVAL DETAILS.
5. REMOVE DUCT IN CHASE TO THE EXTENT NECESSARY TO PERMIT CONSTRUCTION ACTIVITY FOR THE ELEVATOR INSTALLATION.
6. REMOVE WALL HYDRANT. CAP PIPE WITHIN THE WALL.
7. DISCONNECT FIRE PROTECTION PIPE NIPPLE AND DISTRIBUTION HEAD AND TEMPORARILY STORE DISTRIBUTION HEAD FOR REUSE. TEMPORARILY PLUG THE OPENING IN THE FIRE PROTECTION PIPING DURING CONSTRUCTION.
8. DISCONNECT FIRE PROTECTION PIPING AS NEEDED TO PERMIT NECESSARY CONSTRUCTION ACTIVITY FOR ELEVATOR INSTALLATION. TEMPORARILY STORE DISCONNECTED PIPING AND FITTINGS FOR REUSE. TEMPORARILY PLUG FIRE PROTECTION PIPING OPENINGS DURING CONSTRUCTION.
9. REMOVE ABANDONED CONTROL PANEL BOXES TO CREATE SPACE FOR OIL MINDER CONTROL PANEL INSTALLATION. CONFIRM WITH OWNER THE ABANDONED PANEL BOXES TO BE REMOVED.
10. REMOVE FLOOR DRAIN AND BRANCH PIPE IN PREPARATION FOR FLOOR SINK WITH 4" DRAIN PIPE. TRIM BACK CONDENSATE DRAIN LINES AS NEEDED TO COMPLETE FLOOR SINK INSTALLATION.

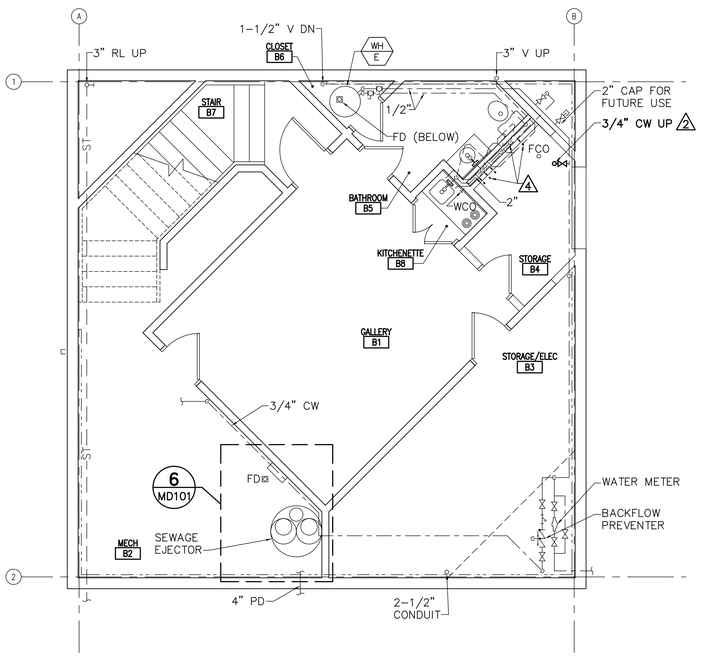

3 MD101 BASEMENT PLUMBING REMOVALS PLAN
SCALE: 1/4"=1'-0"
PLAN NORTH

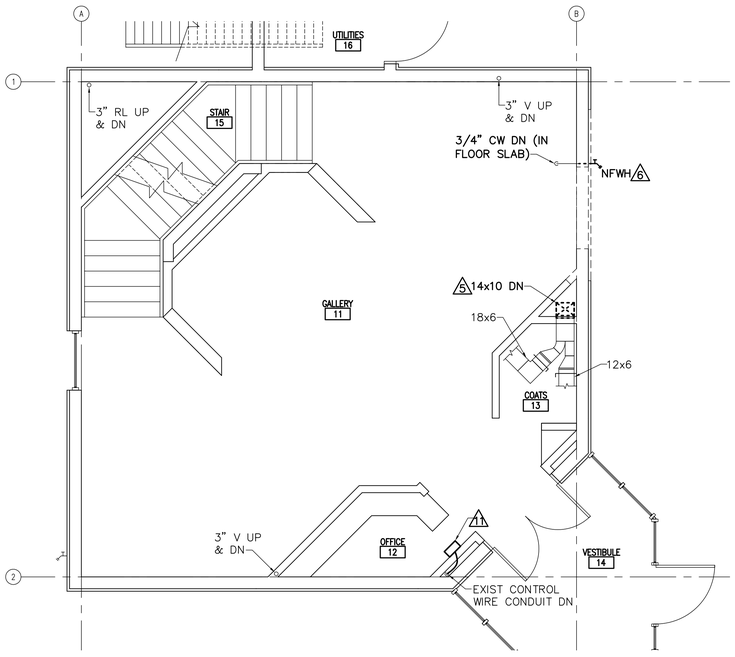

4 MD101 FIRST FLOOR MECHANICAL & PLUMBING REMOVALS PLAN
SCALE: 1/4"=1'-0"
PLAN NORTH

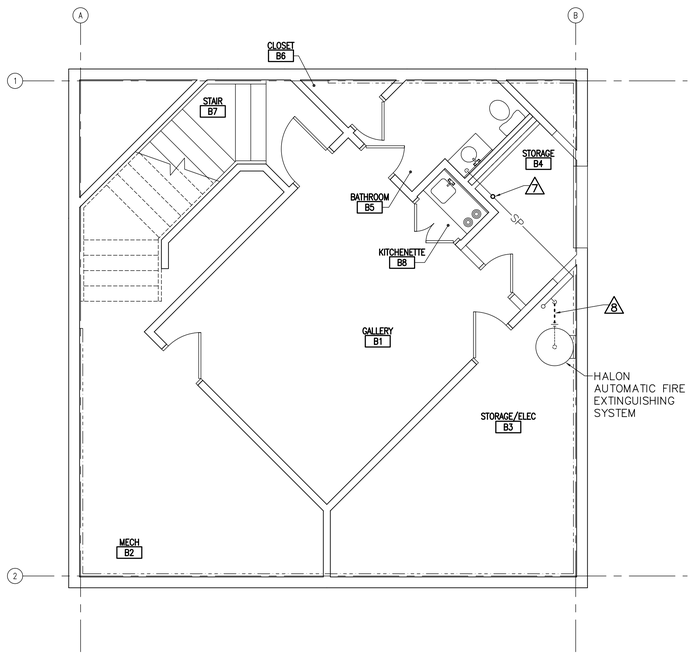

5 MD101 BASEMENT FIRE PROTECTION PIPING REMOVALS PLAN
SCALE: 1/4"=1'-0"
PLAN NORTH

GRAPHIC SCALE
1/4"=1'-0"
4' 2' 0 4' 8'
CHECK GRAPHIC SCALE BEFORE USING

OAK POINT ASSOCIATES
ARCHITECTURE ■ ENGINEERING ■ PLANNING
231 Main Street, Biddeford, Maine 04005 (T) 207.283.0199 (F) 207.283.4283
www.oakpoint.com

STATE OF MAINE RICHARD CRESWELL No. 11178 PROFESSIONAL ENGINEER 3-29-17

DESIGNED BY: RNC
DRAWN BY: RML
CHECKED BY: MSA
PROJECT: 21602.16

UNIVERSITY OF NEW ENGLAND
PORTLAND CAMPUS
Fine Arts Gallery
716 Stevens Avenue
Portland, ME 04103-2693

FINE ARTS GALLERY
ELEVATOR ADDITION

FOR PERMITTING ONLY - NOT FOR CONSTRUCTION

MECHANICAL AND PLUMBING REMOVALS PLANS

SCALE: AS NOTED
DATE: 3-29-17
DWG.: MD101
SHEET: 20 OF 26

29 Mar, 2017 - 9:57am
C:\dfile\21602.16-MD101.dwg